YASKAWA

SIGMA-7

AC Servo Drives and Motors Technical Supplement



yaskawa.com

Product Lineup

Servomotors

◆ Rotary Servomotors

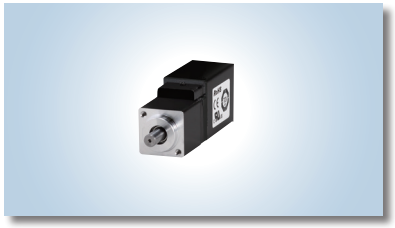

SGMMV (Low inertia, ultra-small capacity)
10 W to 30 W

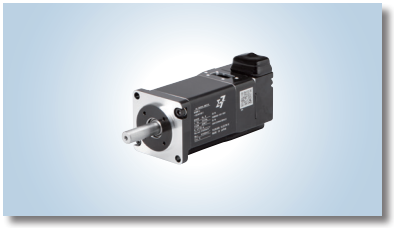

SGM7J (Medium inertia, high speed)
50 W to 1.5 kW



SGM7A (Low inertia, high speed)
50 W to 7 kW

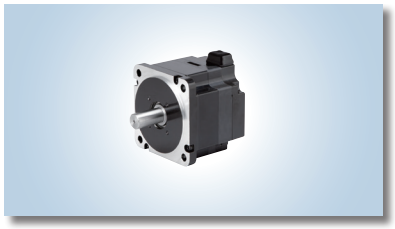

SGM7P (Medium inertia, flat type)
100 W to 1.5 kW



SGM7G (Medium inertia, large torque)
300 W to 15 kW

◆ Direct Drive Servomotors

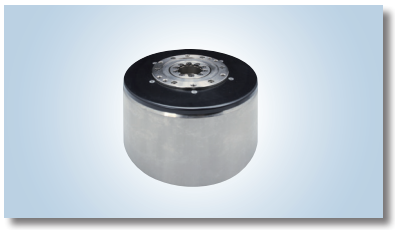

Small capacity, with core, inner rotor (SGM7F)
2 Nm to 35 Nm

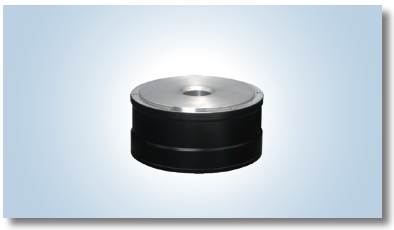

Small and medium capacity, with core,
inner rotor (SGM7D), 1.3 Nm to 240 Nm

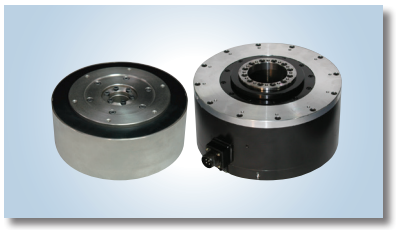

Small capacity, coreless (SGMCS)
2 Nm to 35 Nm

Medium capacity, with core (SGMCS)
45 Nm to 200 Nm

◆ Linear Servomotors

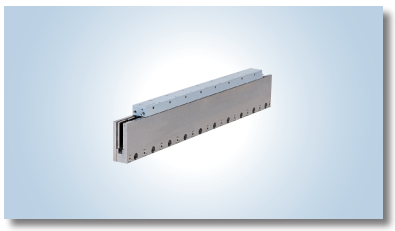

SGLG (Coreless model)
12.5 N to 750 N

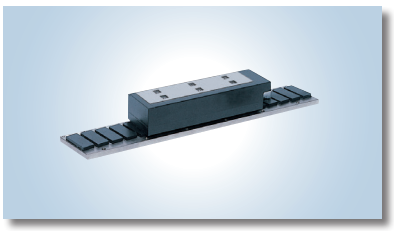

SGLFW2 (Model with F-type iron core)
45 N to 2520 N

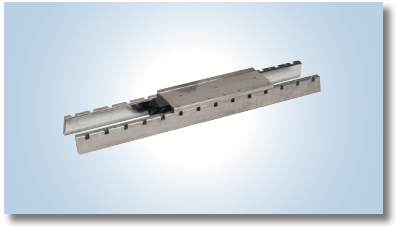

SGLT (Model with T-type iron core)
130 N to 900 N

SERVOPACKs

◆ Single-axis MECHATROLINK-III Communications Reference



SGD7S-□□□□30A

◆ Two-axis MECHATROLINK-III Communications Reference



SGD7W-□□□□30A

◆ Single-axis Analog Voltage/Pulse Train Reference



SGD7S-□□□□00A

◆ Single-axis EtherCAT Communications Reference



SGD7S-□□□□A0A

◆ Two-axis EtherCAT Communications Reference



SGD7W-□□□DA0A (400V only)

Additional Options

◆ Fully-Closed Module



SGDV-OFA01A

◆ Advanced Safety Module



SGDV-OSA01A

◆ Single-Axis Control Option (Sigma-7Siec)



SGD7S□□□AM0A000F50

◆ 1.5 Axis Control Option (MP2600iec)



SGD7S□□□AE0A000300

◆ Network Indexer Option (SigmaLogic7 Compact)



SGD7S-□□□AQ0A000F51

◆ Special Purpose Options (FT Options)



SGD7S-□□□A□0A000F□□

- FT19: Less Deviation Control
- FT79: Built-in Indexer
- FT81: Harmonic Drive SHA Actuators
- FT82/83: for SGM7D Direct Drive Motor

System Configuration Example

Combination of Σ-7S SERVOPACK and Rotary Servomotor/Direct Drive Servomotor (200V Power)

● For MECHATROLINK-III Communications
Three-phase 200 VAC

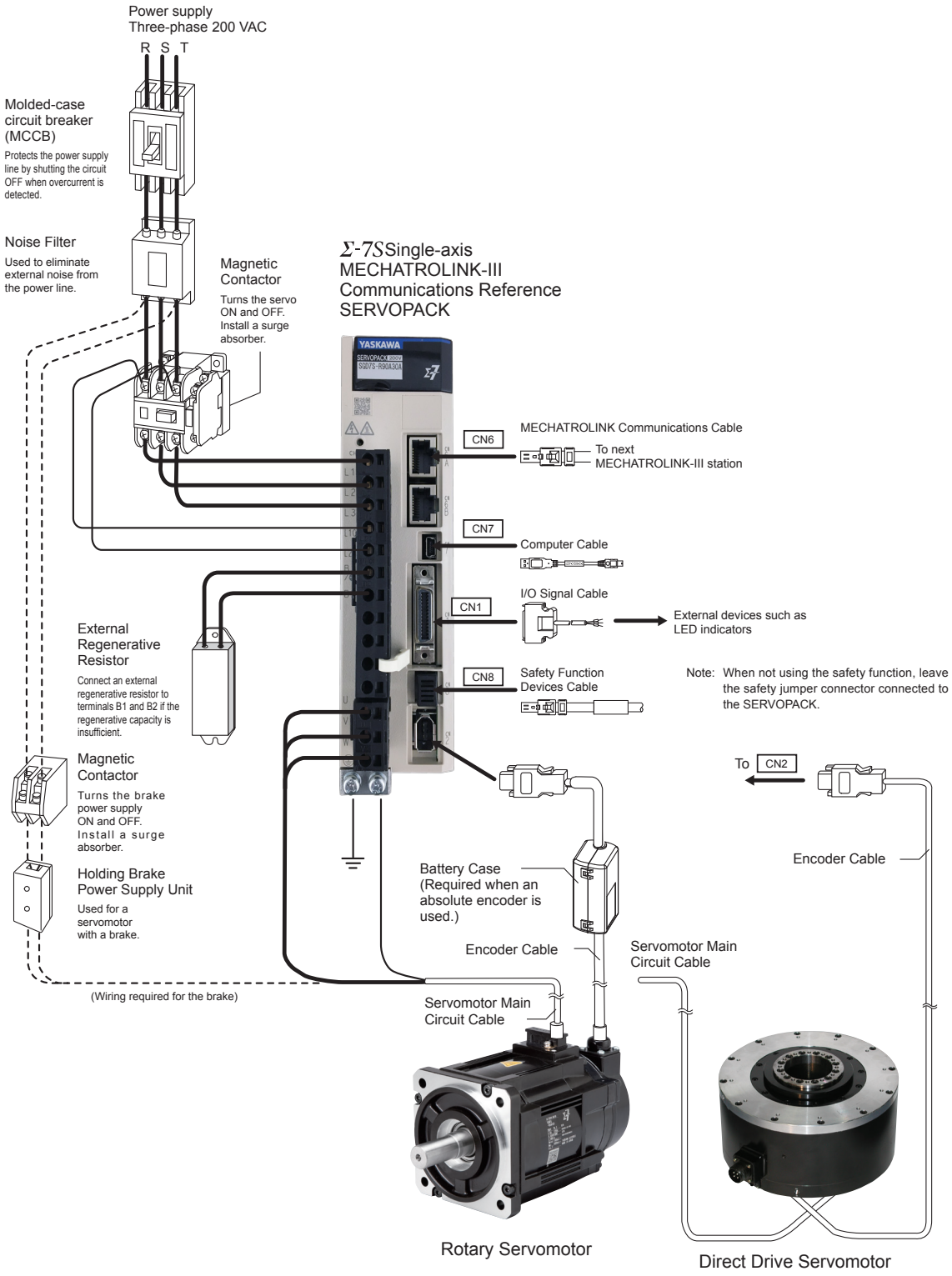

Combination of Σ-7S SERVOPACK and Linear Servomotor (200V Power)

● For MECHATROLINK-III Communications
Three-phase 200 VAC

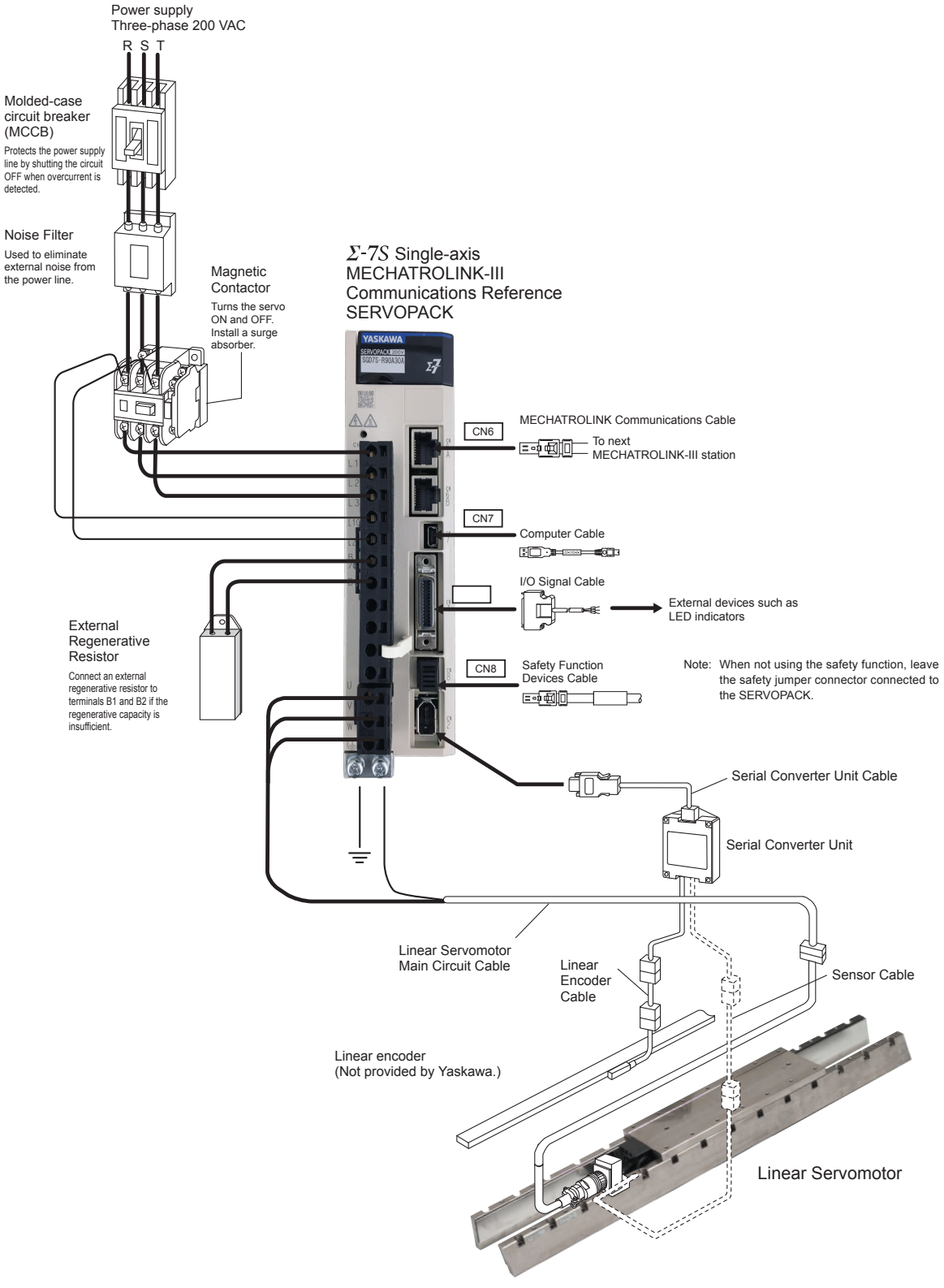

System Configuration Example

Combination of Σ-7W SERVOPACK and Rotary Servomotor/Direct Drive Servomotor (200V Power)

● For MECHATROLINK-III Communications
Three-phase 200 VAC

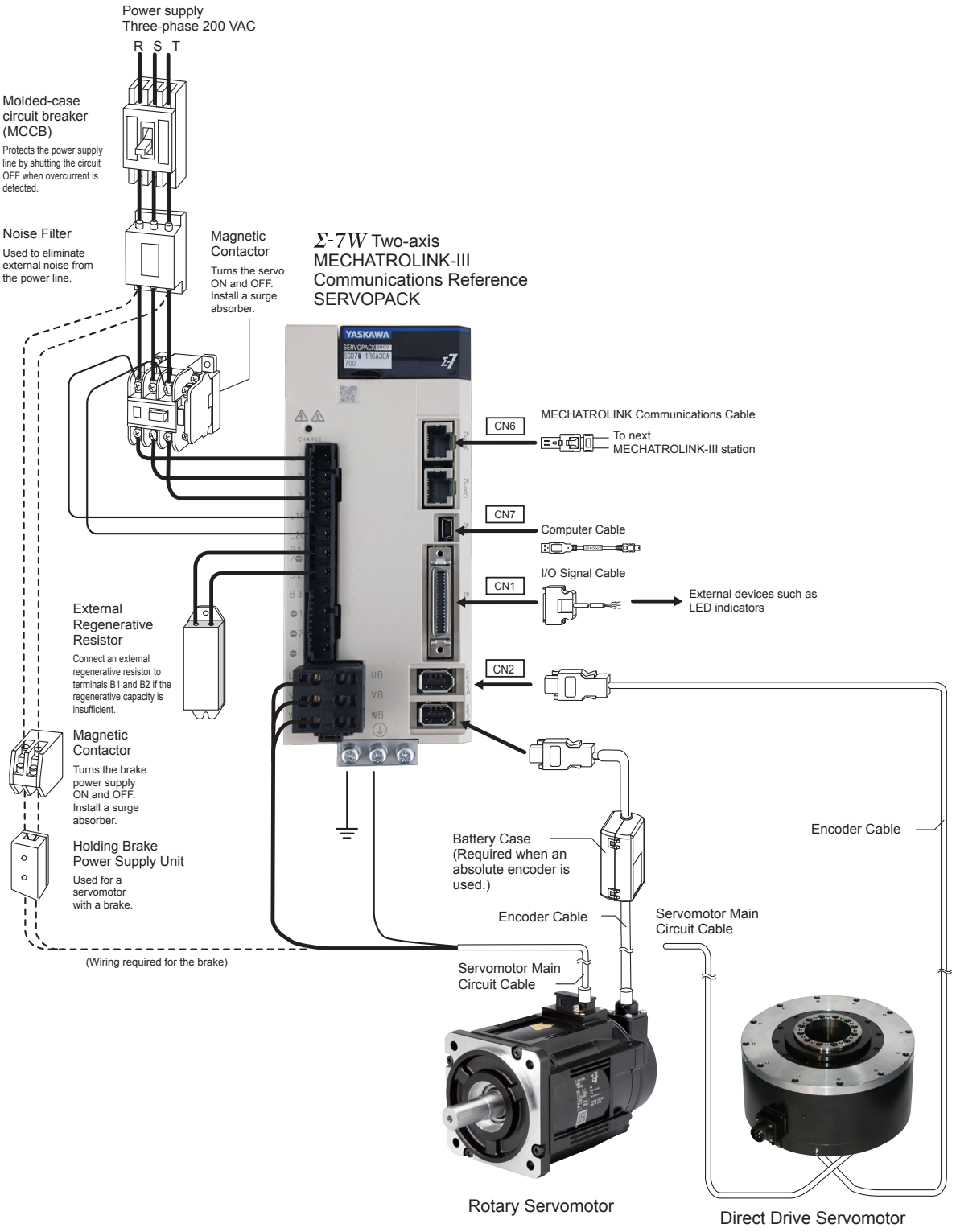

Combination of Σ-7S SERVOPACK and Rotary Servomotor (400V Power)

● For MECHATROLINK-III Communications
Three-phase 400 VAC

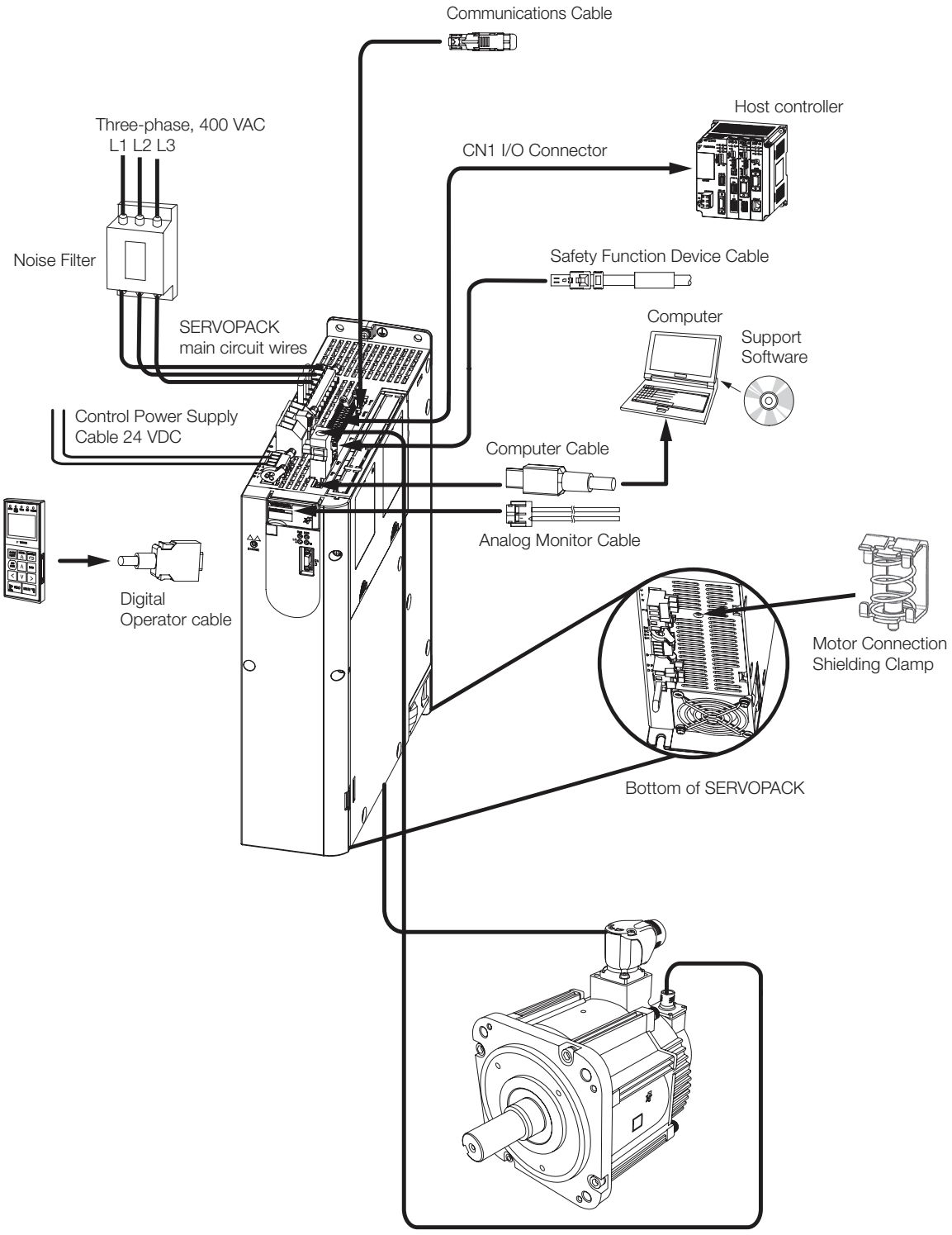

System Configuration Example

Combination of Σ-7S SERVOPACK and Linear Servomotor (400V Power)

● For MECHATROLINK-III Communications
Three-phase 400 VAC

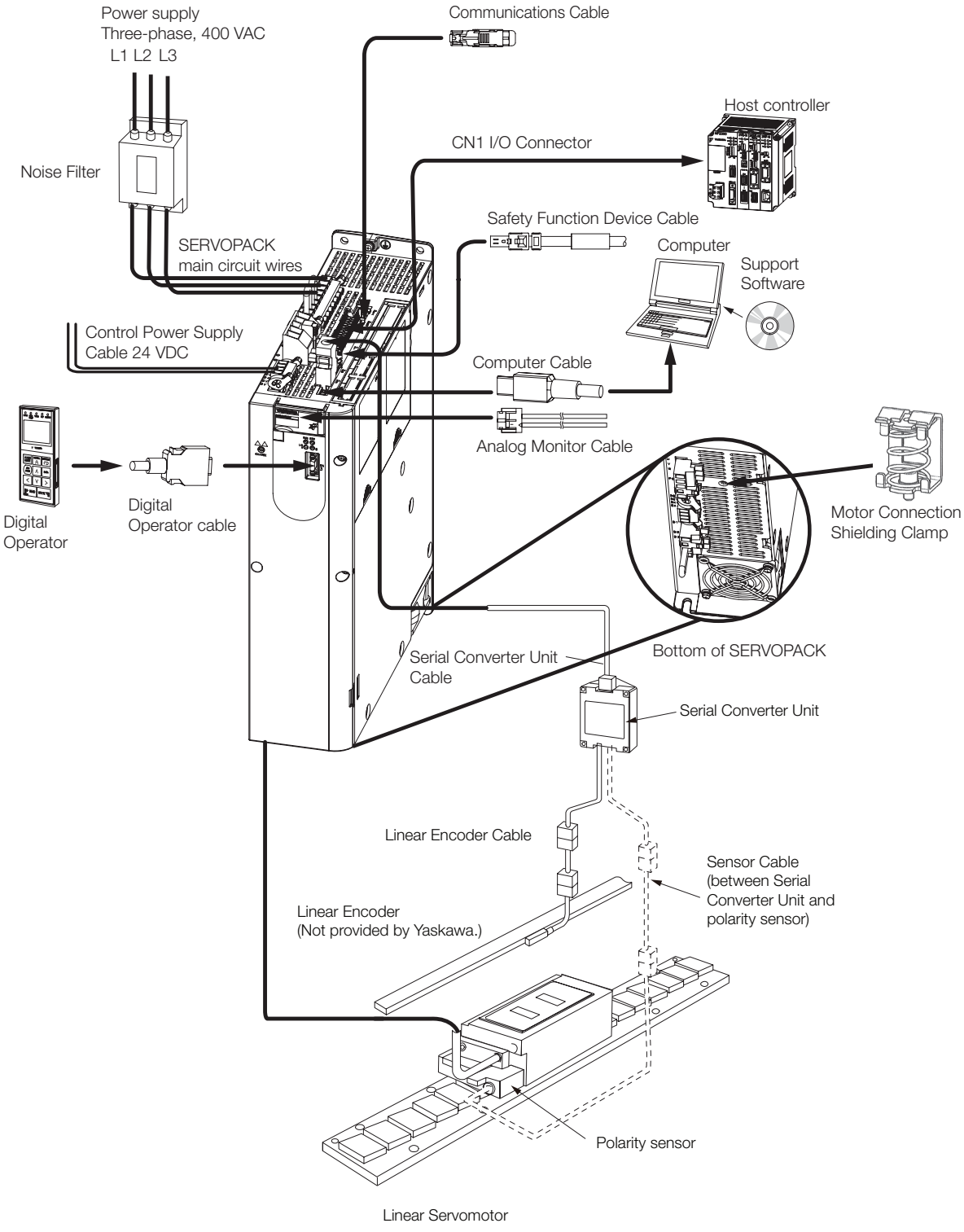

Combination of Σ-7W SERVOPACK and Rotary Servomotors (400V Power)

● For MECHATROLINK-III Communications
Three-phase 400 VAC

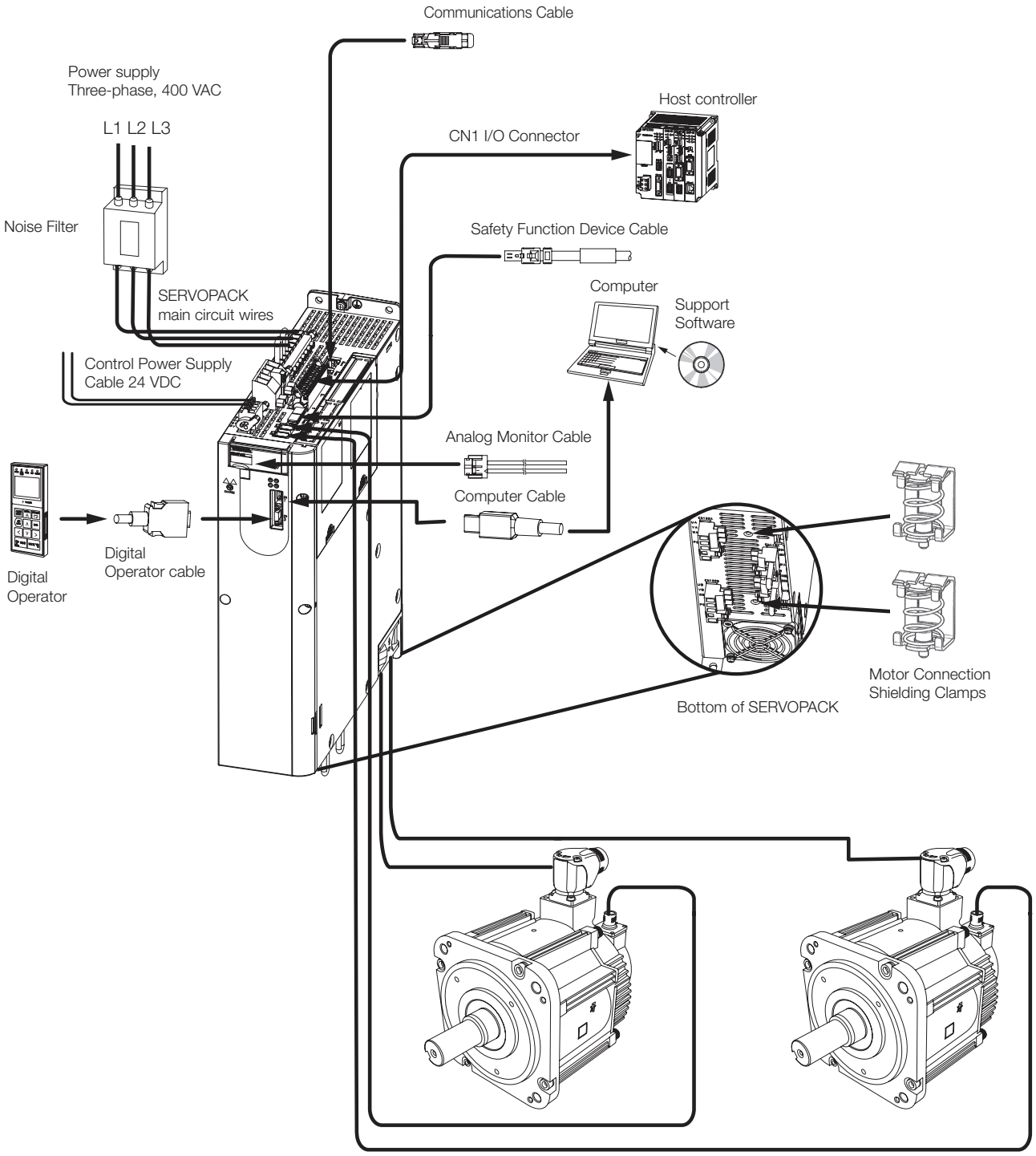

Stock Status Definitions

The product selection tables in this catalog contain stock status codes, which are subject to change. The codes are defined below:

S Stock Item

Normally 3 to 5 days leadtime for most order quantities. 3 to 5 weeks maximum if temporary outages occur. For critical lead time or large quantity shipments, check with your Yaskawa sales representative.

LS Limited Stock Item

Typically small quantites are available from stock. Items may become stock items as demand increases.

NS Non-Stock Item

Non-stock items typically carry a 12 - 16 week delivery time.

Σ-7 Series Combination

●Combination of Rotary Servomotors and SERVOPACKs

Rotary Servomotor Model		Rated Output	Sigma-7 SERVOPACK Model			
			100V/200V	200V	400V	
			SGD7S-□□□□	SGD7W-□□□□	SGD7S-□□□□	SGD7W-□□□□
SGMMV (Low inertia, ultra-small capacity) 6000 RPM	SGMMV-A1A	10 W	R90A, R90F	1R6A*1, 2R8A*1	2R9E	–
	SGMMV-A2A	20 W				
	SGMMV-A3A	30 W	1R6A, 2R1F			
SGM7J (Medium inertia, high speed) 3000 RPM	SGM7J-A5A	50 W	R70A, R70F		–	
	SGM7J-01A	100 W	R90A, R90F			
	SGM7J-C2A	150 W	1R6A, 2R1F			
	SGM7J-02□	200 W			1R9D	2R6D*
	SGM7J-04□	400 W	2R8A, 2R8F	2R8A, 5R5A*1, 7R6A*1		2R6D* or 5R4D*
	SGM7J-06A	600 W	5R5A	5R5A, 7R6A	–	–
	SGM7J-08□	750 W			3R5D	2R6D or 5R4D*
	SGM7J-15D	750 W	N/A	N/A	5R4D	5R4D
SGM7A (Low inertia, high speed) 3000 RPM	SGM7A-A5A	50 W	R70A, R70F	1R6A*1, 2R8A*1	–	–
	SGM7A-01A	100 W	R90A, R90R			
	SGM7A-C2A	150 W	1R6A, 2R1F	1R6A, 2R8A*1		
	SGM7A-02□	200 W			1R9D	2R6D*
	SGM7A-04□	400 W	2R8A, 2R8F	2R8A, 5R5A*1, 7R6A*1		2R6D* or 5R4D*
	SGM7A-06A	600 W	5R5A	5R5A, 7R6A	–	–
	SGM7A-08□	750 W			3R5D	2R6D or 5R4D*
	SGM7A-10□	1.0 kW	120A	–	5R4D	5R4D*
	SGM7A-15A	1.5 kW			5R4D	5R4D
	SGM7A-20A	2.0 kW	180A		8R4D	–
	SGM7A-25A	2.5 kW	200A		120D	
	SGM7A-30A	3.0 kW			120D	
	SGM7A-40A	4.0 kW	330A		170D	
	SGM7A-50A	5.0 kW			170D	
	SGM7A-70A	7.0 kW	550A		–	
SGM7P (Medium inertia, flat type) 3000 RPM	SGM7P-01A	100 W	R90A, R90F	1R6A*1, 2R8A*1	–	–
	SGM7P-02A	200 W	2R8A, 2R8F	2R8A, 5R5A*1, 7R6A*1		
	SGM7P-04A	400 W				
	SGM7P-08A	750 W	5R5A	5R5A, 7R6A		
	SGM7P-15A	1.5 kW	120A	–		
SGM7G (Medium inertia, large torque) 1500 min-1	SGM7G-03A	300 W	3R8A	5R5A*1, 7R6A*1	–	–
	SGM7G-05A	450 W			1R9D	2R6D or 5R4D*
	SGM7G-09A	850 W	7R6A	7R6A	3R5D	5R4D*
	SGM7G-13A	1.3 kW	120A	–	5R4D	5R4D
	SGM7G-20A	1.8 kW	180A		8R4D	–
	SGM7G-30A	2.9 kW*2	330A		120D	
	SGM7G-44A	4.4 kW			170D	
	SGM7G-55A	5.5 kW	470A		210D	
	SGM7G-75A	7.5 kW	550A		260D	
	SGM7G-1AA	11 kW	590A		280D	
	SGM7G-1EA	15 kW	780A		370D	

*1. If you use this combination, performance may not be as good, e.g., the control gain may not increase, in comparison with using a Σ-7S SERVOPACK.
*2. The rated output is 2.4 kW if you combine the SGM7G-30A with the SGD7S-200A.

Σ-7 Series Combination

●Combination of Direct Drive Servomotors and SERVOPACKs

Direct Drive Servomotor Model		Rated Torque Nm	Instantaneous Max. Torque Nm	SERVOPACK Model	
				SGD7S-□□□□	SGD7W-□□□□
SGM7D (With core, outer rotor)	SGM7D-30F	30.0	50.0	120A*1	–
	SGM7D-58F	58.0	100		
	SGM7D-90F	90.0	150		
	SGM7D-1AF	110	200		
	SGM7D-01G	1.30	4.00	2R8A*1, 2R8F*1	
	SGM7D-05G	5.00	6.00		
	SGM7D-08G	8.00	15.0	120A*1	
	SGM7D-18G	18.0	30.0		
	SGM7D-24G	24.0	45.0		
	SGM7D-34G	34.0	60.0		
	SGM7D-45G	45.0	75.0		
	SGM7D-03H	3.00	4.00	2R8A*1, 2R8F*1	
	SGM7D-28I	28.0	50.0	120A*1	
	SGM7D-70I	70.0	100		
	SGM7D-1ZI	100	150		
	SGM7D-1CI	130	200		
	SGM7D-2BI	220	300		
	SGM7D-2DI	240	400		
	SGM7D-06J	6.00	8.00		
	SGM7D-09J	9.00	15.0		
	SGM7D-18J	18.0	30.0		
	SGM7D-20J	20.0	45.0		
	SGM7D-38J	38.0	60.0		
	SGM7D-02K	2.06	5.00	2R8A*1, 2R8F*1	
	SGM7D-06K	6.00	10.0		
	SGM7D-08K	8.00	15.0		
	SGM7D-06L	6.00	10.0		
	SGM7D-12L	12.0	20.0		
	SGM7D-30L	30.0	40.0	120A*1	
SGM7F (With core, inner rotor)	SGM7F-02A	2	6	2R8A, 2R1F	2R8A
	SGM7F-05A	5	15		
	SGM7F-07A	7	21	2R8A, 2R8F	
	SGM7F-04B	4	12		
	SGM7F-10B	10	30		
	SGM7F-14B	14	42	5R5A	
	SGM7F-08C	8	24	2R8A, 2R8F	2R8A
	SGM7F-17C	17	51	5R5A	
	SGM7F-25C	25	75	7R6A	
	SGM7F-16D	16	48	5R5A	
	SGM7F-35D	35	105	7R6A, 120A	7R6A
Small capacity, coreless (SGMCS)	SGMCS-02B	2	6	2R8A	
	SGMCS-05B	5	15		
	SGMCS-07B	7	21		
	SGMCS-04C	4	12		
	SGMCS-10C	10	30		
	SGMCS-14C	14	42		
	SGMCS-08D	8	24		
	SGMCS-17D	17	51		
	SGMCS-25D	25	75		
	SGMCS-16E	16	48	5R5A	
	SGMCS-35E	35	105		
Medium capacity, with core (SGMCS)	SGMCS-45M	45	135	7R6A	
	SGMCS-80M	80	240	120A	–
	SGMCS-80N	80	240		
	SGMCS-1AM	110	330	180A	
	SGMCS-1EN	150	450	200A	
	SGMCS-2ZN	200	600		

Σ-7 Series Combination

●Combination of Linear Servomotors and SERVOPACKs

Linear Servomotor Model			Rated Force N	Max. Force N	SERVOPACK Model	
					SGD7S-□□□□	SGD7W-□□□□ SGD7C-□□□□
SGLG (Coreless model, with standard magnetic way)		SGLGW-30A050C	12.5	40	R70A□R70F	1R6A
		SGLGW-30A080C	25	80	R90A□R90F	
		SGLGW-40A140C	47	140		
		SGLGW-40A253C	93	280	1R6A□2R1F	
		SGLGW-40A365C	140	420	2R8A□2R8F	2R8A
		SGLGW-60A140C	70	220	1R6A□2R1F	1R6A
		SGLGW-60A253C	140	440	2R8A□2R8F	2R8A
		SGLGW-60A365C	210	660	5R5A	
		SGLGW-90A200C	325	1300	120A	–
		SGLGW-90A370C	550	2200	180A	
		SGLGW-90A535C	750	3000	200A	
SGLG (Coreless model, with high-force magnetic way)		SGLGW-40A140C	57	230	1R6A□2R1F	1R6A
		SGLGW-40A253C	114	460	2R8A□2R8F	2R8A
		SGLGW-40A365C	171	690	3R8A	5R5A
		SGLGW-60A140C	85	360	1R6A□2R1F	1R6A
		SGLGW-60A253C	170	720	3R8A	5R5A
		SGLGW-60A365C	255	1080	7R6A	
SGLF (Model with F-type iron core)	SGLFW2*	SGLFW2-30A070A	45	135	1R6A□2R1F	1R6A
		SGLFW2-30A120A	90	270		
		SGLFW2-30A230A	180	540	3R8A	–
			170	500	2R8A□2R8F	2R8A
		SGLFW2-45A200A	280	840	5R5A	
		SGLFW2-45A380A	560	1680	180A	–
				1500	120A	
		SGLFW2-90A200A	560	1680		
		SGLFW2-90A380A	1120	3360	200A	
		SGLFW2-90A560A	1680	5040	330A	
		SGLFW2-1DA380A	1680	5040	200A	
		SGLFW2-1DA560A	2520	7560	330A	
	SGLFW*	SGLFW-20A090A	25	86	1R6A□2R1F	1R6A
		SGLFW-20A120A	40	125		
		SGLFW-35A120A	80	220		
		SGLFW-35A230A	160	440	3R8A	5R5A
		SGLFW-50A200B	280	600	5R5A	
		SGLFW-50A380B	560	1200	120A	–
		SGLFW-1ZA200B				
		SGLFW-1ZA380B	1120	2400	200A	
SGLT (Model with T-type iron core)		SGLTW-20A170A	130	380	3R8A	5R5A
		SGLTW-20A320A	250	760	7R6A	
		SGLTW-20A460A	380	1140	120A	–
		SGLTW-35A170A	220	660	5R5A	
		SGLTW-35A170H	300	600		
		SGLTW-35A320A	440	1320	120A	–
		SGLTW-35A320H	600	1200		
		SGLTW-35A460A	670	2000	180A	
		SGLTW-40A400B	670	2600		
		SGLTW-40A600B	1000	4000	330A	
		SGLTW-50A170H	450	900	5R5A	
		SGLTW-50A320H	900	1800	120A	–
		SGLTW-80A400B	1300	5000	330A	
		SGLTW-80A600B	2000	7500	550A	

*: The SGLFW model is an earlier product. Select the SGLFW2 model when newly installing a linear servomotor to a machine.

Recommended Encoders

●Incremental Linear Encoders

✓ : Possible

Output Signal	Manufacturer	Linear Encoder Type	Model			Linear Encoder Pitch μm	Resolution nm	Maximum Speed*3 m/s	Support for Polarity Sensor Input	Application to Linear Motors	Application to Fully-Closed Loop Control
			Scale	Sensor Head	Interpolator (Serial Converter Unit)						
1 Vp-p Analog Voltage*1	Heidenhain Corporation	Exposed	LIDA48□		JZDP-H003/-H006*5	20	78.1	5	✓	✓	✓
					JZDP-J003/-J006*5		4.9	2	✓	✓	*8
			LIF48□		JZDP-H003/-H006*5	4	15.6	1	✓	✓	✓
					JZDP-J003/-J006*5		1.0	0.4	✓	*8	*8
	Renishaw plc*4	Exposed	RGS20	RGH22B	JZDP-H005/-H008*5	20	78.1	5	✓	✓	✓
					JZDP-J005/-J008*5		4.9	2	✓	✓	*8
Encoder for Yaskawa's Serial Interface*2 (Σ-LINK)	Magnescale Co., Ltd.	Exposed	SL7□0	PL101-RY*6		800	97.7	10	–	✓	✓
				PL101	MJ620-T13*7				✓	✓	*8
			SQ10	PQ10	MQ10-FLA	400	48.83	3	–	✓	✓
					MQ10-GLA				✓	✓	–
			BL57-□□□RED*8		BD96-Y1051LC	0.4	0.78	0.8	✓	✓	–
					BD96-Y1025LC	0.4	1.56	1.0	✓	✓	–
					BD96-Y2051LC	0.4	0.78	0.8	✓	✓	–
					BD96-Y2025LC	0.4	1.56	1.0	✓	✓	–
					BD96-YJ051LC	0.4	0.78	0.8	✓	✓	–
					BD96-YJ025LC	0.4	1.56	1.0	✓	✓	–
			BF1-□□□RY□F□□*8			0.25	0.49	1.77	✓	✓	✓
			BF1-□□□RY□F□□*8			0.25	0.98	1.8	✓	✓	✓
		Sealed	SR75-□□□□□LF		–	80	9.8	3.33	–	✓	✓
			SR75-□□□□□MF		–	80	78.1	3.33	–	✓	✓
			SR85-□□□□□LF		–	80	9.8	3.33	–	✓	✓
			SR85-□□□□□MF		–	80	78.1	3.33	–	✓	✓

*1: You must also use a Yaskawa Serial Converter Unit. The output signal will be multiplied by 8 bits (256 divisions) or 12 bits (4,096 divisions) in the Serial Converter Unit.
*2: The multiplier (number of divisions) depends on the Linear Encoder. Also, you must write the motor constant file to the Linear Encoder in advance.
*3: The maximum speeds given in the above table are the maximum applicable speeds of the encoders when combined with a Yaskawa SERVOPACK. The actual speed will be restricted by either the maximum speed of the Linear Servomotor or the maximum speed of the Linear Encoder (given above).
*4: If you use the origin signals with a Linear Encoder from Renishaw plc, the origin may sometimes be falsely detected. If that occurs, use the BID/DIR signal to output the origin signal only in one direction.
*5: Use this model number to purchase the Serial Converter Unit.
*6: Use this model number to purchase the Sensor Head with Interpolator.
*7: Use this model number to purchase the Interpolator.
*8: Contact your Yaskawa representative.
Note: 1. Confirm detailed specifications, such as the tolerances, dimensions, and operating environment, with the manufacturer of the Encoder before you use it.
2. Σ-LINK is a registered trademark of YASKAWA ELECTRIC CORPORATION.

●Absolute Rotary Encoder

The following Absolute Rotary Encoders are for fully-closed control. Can not use it to control the motor.

Output Signal	Manufacturer	Rotary Encoder Type	Model		Relay Device between Fully-Closed Module and Rotary Encoder	Resolution Bits	Maximum Speed*1 min^{-1}
			Scale	Sensor Head			
Encoder for Yaskawa's Serial Interface (Σ-LINK)	Magnescale Co., Ltd.	Sealed	RU77-4096ADF*2		–	20	2000
			RU77-4096AFFT01*2		–	22	2000
	Heidenhain Corporation	Exposed	ECA4412*2		EIB3391Y	27	1600
						28	800
						29	400
		Sealed	RCN2□10*2			26	3000
			RCN5□10*2			28	800
			RCN8□10*2			29	400
			ROC2310*2			26	3000
			ROC7310*2			28	800
	Renishaw plc	Exposed	RA23Y-□□□□□□□□□*2		–	23	14600
			RA26Y-□□□□□□□□□*2		–	26	3250
			RA30Y-□□□□□□□□□*2		–	30	200

*1: The maximum speeds given in the above table are the maximum applicable speeds of the encoders when combined with a Yaskawa SERVOPACK. The actual speed will be restricted by either the maximum speed of the Linear Servomotor or the maximum speed of the Linear Encoder (given above).
*2: This is a single-turn absolute encoder.
Note: 1. Confirm detailed specifications, such as the tolerances, dimensions, and operating environment, with the manufacturer of the Encoder before you use it.
2. Σ-LINK is a registered trademark of YASKAWA ELECTRIC CORPORATION.

●Absolute Linear Encoder

✓ : Possible

Output Signal	Manufacturer	Linear Encoder Type	Model			Linear Encoder Pitch[*2] μm	Resolution nm	Maximum Speed[*3] m/s	Support for Polarity Sensor Input	Application to Linear Motors	Application to Fully-Closed Loop Control
			Scale	Sensor Head	Interpolator (Serial Converter Unit)						
Encoder for Yaskawa's Serial Interface[*1] (Σ-LINK)	Magnescale Co., Ltd.	Exposed	SQ47-□□□□S□F□□□		–	20.48	5	3.33	–	✓	✓
			SQ47-□□□□T□F□□□								
			SQ47-□□□□A□F□□□		–	40.96	10	3.33	–	✓	✓
			SQ47-□□□□F□F□□□								
			SQ57-□□□□S□F□□□		–	20.48	5	3.33	–	✓	✓
			SQ57-□□□□T□F□□□								
			SQ57-□□□□A□F□□□		–	40.96	10	3.33	–	✓	✓
			SQ57-□□□□F□F□□□								
		Sealed	SR77-□□□□□LF		–	80	9.8	3.33	–	✓	✓
			SR77-□□□□□MF		–	80	78.1	3.33	–	✓	✓
			SR87-□□□□□LF		–	80	9.8	3.33	–	✓	✓
			SR87-□□□□□MF		–	80	78.1	3.33	–	✓	✓
	Mitutoyo Corporation	Exposed	ST781A		–	256	500	5	–	✓	✓
			ST782A		–	256	500	5	–	✓	✓
			ST783A		–	51.2	100	5	–	✓	✓
			ST784A		–	51.2	100	5	–	✓	✓
			ST788A		–	51.2	100	5	–	✓	✓
			ST789A[*4]		–	25.6	50	5	–	✓	✓
			ST1381		–	5.12	10	8	–	✓	✓
			ST1382		–	0.512	1	3.6[*6]	–	✓	✓
	Heidenhain Corporation	Exposed	LIC4100 Series		EIB3391Y[*5]	20.48	5	10	–	✓	✓
			LIC2100 Series			204.8	50	10	–	✓	✓
						409.6	100	10	–	✓	✓
		Sealed	LC115			40.96	10	3	–	✓	✓
			LC415			40.96	10	3	–	✓	✓
	Renishaw plc	Exposed	EL36Y-□□050F□□□		–	12.8	50	100	–	✓	✓
			EL36Y-□□100F□□□		–	25.6	100	100	–	✓	✓
			EL36Y-□□500F□□□		–	128	500	100	–	✓	✓
			RL36Y-□□050□□□		–	12.8	50	100	–	✓	✓
			RL36Y-□□001□□□		–	0.256	1	3.6	–	✓	✓

*1: The multiplier (number of divisions) depends on the Linear Encoder. Also, you must write the motor constant file to the Linear Encoder in advance.
*2: These are reference values for setting SERVOPACK parameters. Contact the manufacturer for actual linear encoder scale pitches.
*3: The maximum speeds given in the above table are the maximum applicable speeds of the encoders when combined with a Yaskawa SERVOPACK. The actual speed will be restricted by either the maximum speed of the Linear Servomotor or the maximum speed of the Linear Encoder (given above).
*4: Contact Mitutoyo Corporation for details on the Linear Encoders.
*5: Use this model number to purchase the Interpolator.
*6: The speed is restricted for some SERVOPACKs.
Note: 1. Confirm detailed specifications, such as the tolerances, dimensions, and operating environment, with the manufacturer of the Encoder before you use it.
2. Σ-LINK is a registered trademark of YASKAWA ELECTRIC CORPORATION.

Related Documents

The documents that are related to the MP3300 Machine Controllers and Σ-7 series AC Servo Drives are shown in the following table. Refer to these documents as required.

Brochure/Catalog Name (Document No.)	Manual Name (Manual No.)	Description of Document
Yaskawa Motion Product Brochure: Confident, Consistent, Capable (BL.MTN.01)	–	This brochure presents an introduction to Yaskawa America Motion Products and services, with an emphasis on AC Servo, Machine Controller, and IO products.
Σ-7 Series AC Servo Drives and Motors Technical Supplement (YAI-KAEPS80000123)	MP3300iec Machine Controller Hardware Manual (YAI-SIA-IEC-7)	Provides detailed information on selection and installation MP3300iec machine controller components/accessories.
	Σ-7S SERVOPACK with MECHATROLINK-3 Communications References Product Manual (SIEPS80000128)	Provides detailed information on selecting Σ-7-Series SERVOPACKs and information on installing, connecting, setting, performing trial operation for, tuning, and monitoring the Servo Drives.
	Σ-7S SERVOPACK with Analog Voltage/Pulse Train References Product Manual (SIEPS80000126)	
	Σ-7S SERVOPACK with EtherCAT (CoE) Communication References Product Manual (SIEPS80000155)	
	Σ-7W SERVOPACK with MECHATROLINK-3 Communications References Product Manual (SIEPS80000129)	
	Σ-V-Series/Σ-V-Series for Large-Capacity Models/Σ-7-Series User's Manual Safety Module (SIEPC72082906)	Provides details information required for the design and maintenance of a Safety Module.
	Rotary Servomotor Product Manual (SIEPS80000136)	Provide detailed information on selecting, installing, and connecting the Σ-7-Series Servomotors.
	Linear Servomotor Product Manual (SIEPS80000137)	
	Direct Drive Servomotor Product Manual (SIEPS80000138)	
	Peripheral Device Selection Manual (SIEPS80000132)	Describes the peripheral devices for a Σ-7-Series Servo System.
	MECHATROLINK-3 Communications Standard Servo Profile Command Manual (SIEPS80000131)	Provides detailed information on the MECHATROLINK-3 communications standard servo profile commands that are used for a Σ-7- Series Servo System.
	Digital Operator Operating Manual (SIEPS80000133)	Describes the operating procedures for a Digital Operator for a Σ-7-Series Servo System.
	Engineering Tool SigmaWin+ Online Manual Σ-7 Component (SIEPS80000148)	Provides detailed operating procedures for the SigmaWin+ Engineering Tool for a Σ-7-Series Servo System.

Brochure/Catalog Name (Document No.)	Manual Name (Manual No.)	Description of Document
Σ-7 Series AC Servo Drives and Motors Technical Supplement (YAI-KAEPS80000123)	Σ-7S SERVOPACK with 400V-Input Power and EtherCAT (CoE) Communications References Product Manual (SIEPS80000180)	Provides detailed information on selecting Σ-7-Series SERVOPACKs and information on installing, connecting, setting, performing trial operation for, tuning, and monitoring the Servo Drives.
	Σ-7S SERVOPACK with 400V-Input Power and MECHATROLINK III Communications References Product Manual (SIEPS80000214)	
	Σ-7W SERVOPACK with 400V-Input Power and EtherCAT (CoE) Communications References Product Manual (SIEPS80000219)	
	Σ-7W SERVOPACK with 400V-Input Power and MECHATROLINK III Communications References Product Manual(SIEPS80000220)	
	Σ-V-Series User Manual Safety Module (SIEPC 72082906E) Supplement for using with Sigma-7 SERVOPACKs (400 V-Input power models) (900-200-100)	Provides details information required for the design and maintenance of a Safety Module.
	Rotary Servomotor with 400 V-Input Power Product Manual (SIEPS80000186)	Provide detailed information on selecting, installing, and connecting the Σ-7-Series Servomotors.
	Linear Servomotor with 400 V-Input Power Product Manual (SIEPS8000181)	

CONTENTS

Rotary Servo Motors	
SGMMV	4
SGM7J	18
SGM7A	52
SGM7P	106
SGM7G	124
Direct Drive Servo Motors	
SGM7F (With Core, Inner Rotor)	170
SGM7D (With Core, Outer Rotor)	186
SGMCS (Small Capacity, Coreless or Medium Capacity, with Core)	214
Linear Servo Motors	
SGLFW2 (Models with F-type Iron Cores, 200V)	240
SGLFW2 (Models with F-type Iron Cores, 400V)	268
SGLG (Coreless Models)	288
SGLT (Models with T-type Iron Cores)	318
Recommended Linear Encoders and Cables	348
SGLFW (Earlier Models with F-type Iron Cores)	372
SERVOPACKs	
Σ-7S Single-axis Analog Voltage/Pulse Train Reference SERVOPACKs	398
Σ-7S Single-axis MECHATROLINK-III Communications Reference SERVOPACKs	408
Σ-7S Single-axis EtherCAT Communications Reference SERVOPACKs	422
Σ-7W Two-axis MECHATROLINK-III Communications Reference SERVOPACKs	438
Σ-7W Two-axis EtherCAT Communications Reference SERVOPACKs	452
SERVOPACK External Dimensions	458
Option Modules	
Feedback Option Module	474
Safety Option Module	480
Sigma-7Siec Option	484
MP2600iec Option	486
SigmaLogic7 Compact Option	494
FT19 Option - Less Deviation Control	496
FY79 Option - Built-in Indexer	498
FT81 Option - Support for Harmonic Drive SHA Series Actuators	500
FT82/83 Option - Support for SGM7D Direct Drive Motor	502
Cables and Peripheral Devices	
Cables for SERVOPACKs	504
Peripheral Devices	514

Appendices

Capacity Selection for Servo Motors	546
Capacity Selection for Regenerative Resistors	556
International Standards	572
Warranty	574

Rotary Servo Motors

SGMMV 4

SGM7J 18

SGM7A 52

SGM7P 106

SGM7G 124

Model Designations

SGMMV - A1 A 2 A 2 1

1st+2nd digits	3rd digit	4th digit	5th digit	6th digit	7th digit

Σ-V mini Series Servo Motors: SGMMV

1st+2nd digits Rated Output

Code	Specification
A1	10 W
A2	20 W
A3	30 W

3rd digit Power Supply Voltage

Code	Specification
A	200 VAC

4th digit Serial Encoder

Code	Specification
2	17-bit absolute

5th digit Design Revision Order

A

6th digit Shaft End

Code	Specification
2	Straight
A	Straight with flat seats

7th digit Options

Code	Specification
1	Without options
C	With holding brake (24 VDC)

■ Non Stock Items

Specifications and Ratings

Specifications

Voltage		200 V		
Model SGMMV-		A1A	A2A	A3A
Time Rating		Continuous		
Thermal Class		B		
Insulation Resistance		500 VDC, 10 MΩ min.		
Withstand Voltage		1,500 VAC for 1 minute		
Excitation		Permanent magnet		
Mounting		Flange-mounted		
Drive Method		Direct drive		
Rotation Direction		Counterclockwise (CCW) for forward reference when viewed from the load side		
Vibration Class*1		V15		
Environmental Conditions	Surrounding Air Temperature	0°C to 40°C		
	Surrounding Air Humidity	20% to 80% relative humidity (with no condensation)		
	Installation Site	• Must be indoors and free of corrosive and explosive gases. • Must be well-ventilated and free of dust and moisture. • Must facilitate inspection and cleaning. • Must have an altitude of 1,000 m or less. • Must be free of strong magnetic fields.		
	Storage Environment	Store the Servo Motor in the following environment if you store it with the power cable disconnected. Storage Temperature: -20°C to 60°C (with no freezing) Storage Humidity: 20% to 80% relative humidity (with no condensation)		
Shock Resistance*2	Impact Acceleration Rate at Flange	490 m/s^2		
	Number of Impacts	2 times		
Vibration Resistance*3	Vibration Acceleration Rate at Flange	49 m/s^2		
Applicable SERVOPACKs	SGD7S-	R90A, R90F		1R6A, 2R1F
	SGD7W-	1R6A*4, 2R8A*4		1R6A, 2R8A*4

*1. A vibration class of V15 indicates a vibration amplitude of 15 μm maximum on the Servo Motor without a load at the rated motor speed.

*2. The shock resistance for shock in the vertical direction when the Servo Motor is mounted with the shaft in a horizontal position is given in the above table.

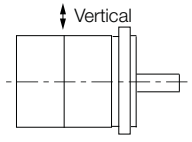

Shock Applied to the Servo Motor

*3. The vertical, side-to-side, and front-to-back vibration resistance for vibration in three directions when the Servo Motor is mounted with the shaft in a horizontal position is given in the above table. The strength of the vibration that the Servo Motor can withstand depends on the application. Always check the vibration acceleration rate that is applied to the Servo Motor with the actual equipment.

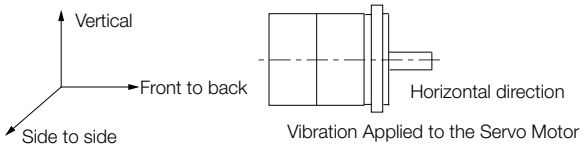

Vibration Applied to the Servo Motor

*4. If you use a S-7W SERVOPACK, the control gain may not increase as much as with a S-7S SERVOPACK and other performances may be lower than those achieved with a S-7S SERVOPACK.

Servo Motor Ratings

Voltage			200 V		
Model SGMMV-			A1A	A2A	A3A
Rated Output*1		W	10	20	30
Rated Torque*1, *2		N•m	0.0318	0.0637	0.0955
Instantaneous Maximum Torque*1		N•m	0.0955	0.191	0.286
Rated Current*1		Arms	0.70	0.66	0.98
Instantaneous Maximum Current*1		Arms	2.0	1.9	2.9
Rated Motor Speed*1		min^{-1}	3000		
Maximum Motor Speed*1		min^{-1}	6000		
Torque Constant		N•m/Arms	0.0516	0.107	
Motor Moment of Inertia		$\times 10^{-7}$ kg•m^2	2.72 (4.07)	4.66 (6.02)	6.68 (8.04)
Rated Power Rate*1		kW/s	3.72	8.71	13.7
Rated Angular Acceleration Rate*1		rad/s^2	117000	137000	143000
Heat Sink Size (Aluminum)		mm	150 x 50 x 3	250 x 250 x 6	
Protective Structure*3			Totally enclosed, self-cooled, IP55 (except for shaft opening)		
Holding Brake Specifications*4	Rated Voltage	V	24 VDC $^{+10\%}_{0}$		
	Capacity	W	2.0	2.6	
	Holding Torque	N•m	0.0318	0.0637	0.0955
	Coil Resistance	Ω (at 20°C)	320	221.5	
	Rated Current	A (at 20°C)	0.075	0.108	
	Time Required to Release Brake	ms	40		
	Time Required to Brake	ms	100		
Allowable Load Moment of Inertia (Motor Moment of Inertia Ratio)			30 times		
	With External Regenerative Resistor and Dynamic Brake Resistor		30 times		
Allowable Shaft Loads*5	LF	mm	16		
	Allowable Radial Load	N	34	44	
	Allowable Thrust Load	N	14.5		

*1. These values are for operation in combination with a SERVOPACK when the temperature of the armature winding is 20°C. These are typical values.

*2. The rated torques are the continuous allowable torque values with an aluminum or steel heat sink of the dimensions given in the table.

*3. This does not apply to the shaft opening. Protective structure specifications apply only when the special cable is used.

*4. Observe the following precautions if you use a Servo Motor with a Holding Brake.
- The holding brake cannot be used to stop the Servo Motor.
- The time required to release the brake and the time required to brake depend on which discharge circuit is used. Confirm that the operation delay time is appropriate for the actual equipment.
- The 24-VDC power supply is not provided by Yaskawa.

*5. The allowable shaft loads are illustrated in the following figure. Design the mechanical system so that the thrust and radial loads applied to the Servo Motor shaft end during operation do not exceed the values given in the table.

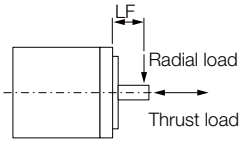

Note: The values in parentheses are for Servo Motors with Holding Brakes.

Torque-Motor Speed Characteristics

A : Continuous duty zone
B : Intermittent duty zone*

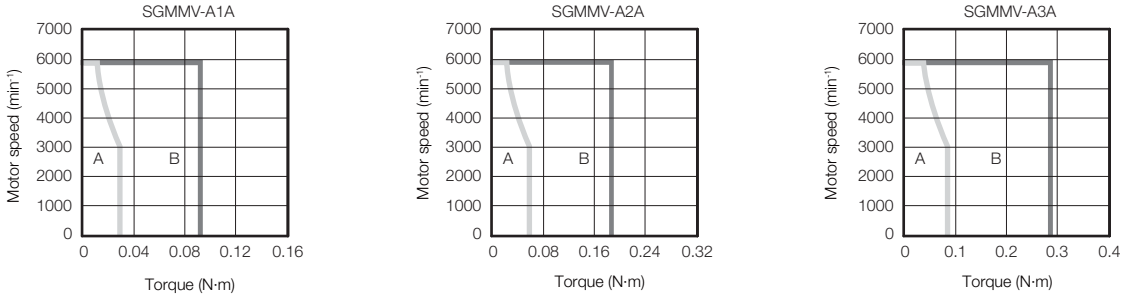

* The characteristics are the same for three-phase 200 V, single-phase 200 V, and single-phase 100 V input.

Note: 1. These values are for operation in combination with a SERVOPACK when the temperature of the armature winding is 20°C. These are typical values.

2. The characteristics in the intermittent duty zone depend on the power supply voltage.

3. If the effective torque is within the allowable range for the rated torque, the Servo Motor can be used within the intermittent duty zone.

4. If you use a Servo Motor Main Circuit Cable that exceeds 20 m, the intermittent duty zone in the torque-motor speed characteristics will become smaller because the voltage drop increases.

Servo Motor Overload Protection Characteristics

The overload detection level is set for hot start conditions with a Servo Motor surrounding air temperature of 40°C.

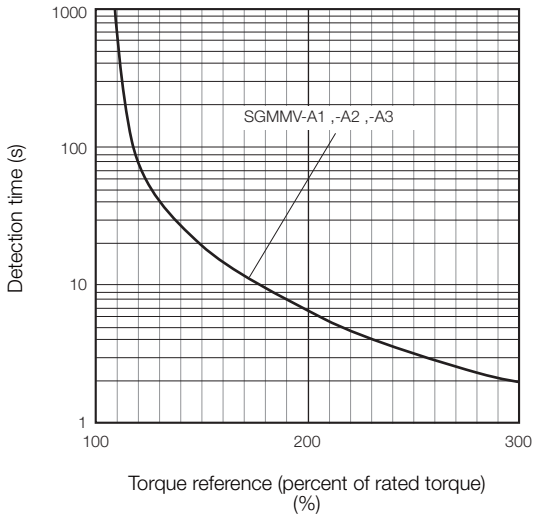

Note: The above overload protection characteristics do not mean that you can perform continuous duty operation with an output of 100% or higher. Use the Servo Motor so that the effective torque remains within the continuous duty zone given in *Torque-Motor Speed Characteristics* (page 8).

Load Moment of Inertia

The load moment of inertia indicates the inertia of the load. The larger the load moment of inertia, the worse the response. If the moment of inertia is too large, operation will become unstable.

The allowable size of the load moment of inertia (J_L) for the Servo Motor is restricted. Refer to *Servo Motor Ratings* (page 7). This value is provided strictly as a guideline and results depend on Servo Motor driving conditions.

An Overvoltage Alarm (A.400) is likely to occur during deceleration if the load moment of inertia exceeds the allowable load moment of inertia. SERVOPACKs with a built-in regenerative resistor may generate a Regenerative Overload Alarm (A.320). Perform one of the following steps if this occurs.

- Reduce the torque limit.
- Reduce the deceleration rate.
- Reduce the maximum motor speed.
- Install an External Regenerative Resistor if the alarm cannot be cleared using the above steps.

Regenerative resistors are not built into SERVOPACKs for 400-W Servo Motors or smaller Servo Motors. Even for SERVOPACKs with built-in regenerative resistors, an External Regenerative Resistor is required if the energy that results from the regenerative driving conditions exceeds the allowable loss capacity (W) of the built-in regenerative resistor.

Allowable Load Moment of Inertia Scaling Factor for SERVOPACKs without Built-in Regenerative Resistors

The following graphs show the allowable load moment of inertia scaling factor of the motor speed for SERVOPACKs* without built-in regenerative resistors when an External Regenerative Resistor is not connected.

If the Servo Motor exceeds the allowable load moment of inertia, an overvoltage alarm may occur in the SERVOPACK.

These graphs provide reference data for deceleration at the rated torque or higher.

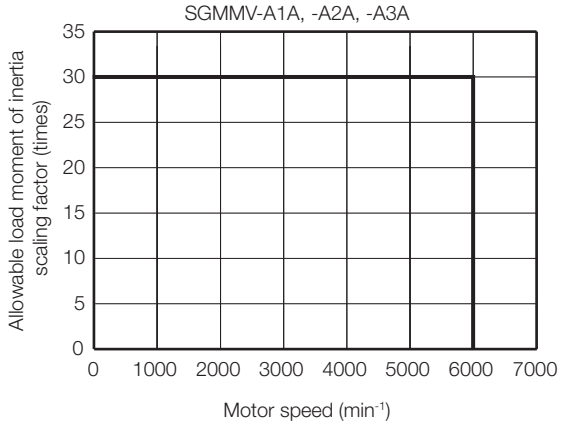

* Applicable SERVOPACK models: SGD7S-R90A, -1R6A, -R90F, and -2R1F

Servo Motor Heat Dissipation Conditions

The Servo Motor ratings are the continuous allowable values when a heat sink is installed on the Servo Motor. If the Servo Motor is mounted on a small device component, the Servo Motor temperature may rise considerably because the surface for heat dissipation becomes smaller. Refer to the following graphs for the relation between the heat sink size and derating rate.

When using Servo Motors with derating, change the detection timing of overload warnings and overload alarms by referring to the motor overload detection level described in the following manual.

📖 *Σ-7-Series AC Servo Drive Rotary Servo Motor Product Manual* (Manual No.: SIEP S800001 36)

Note: The derating rates are applicable only when the average motor speed is less than or equal to the rated motor speed. If the average motor speed exceeds the rated motor speed, consult with your Yaskawa representative.


Important

The actual temperature rise depends on how the heat sink (i.e., the Servo Motor mounting section) is attached to the installation surface, what material is used for the Servo Motor mounting section, and the motor speed. Always check the Servo Motor temperature with the actual equipment.

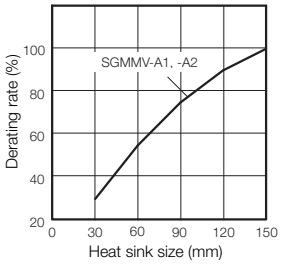

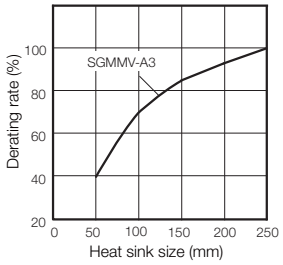

External Dimensions

Servo Motors without Holding Brakes

◆ SGMMV-A1, -A2 and -A3

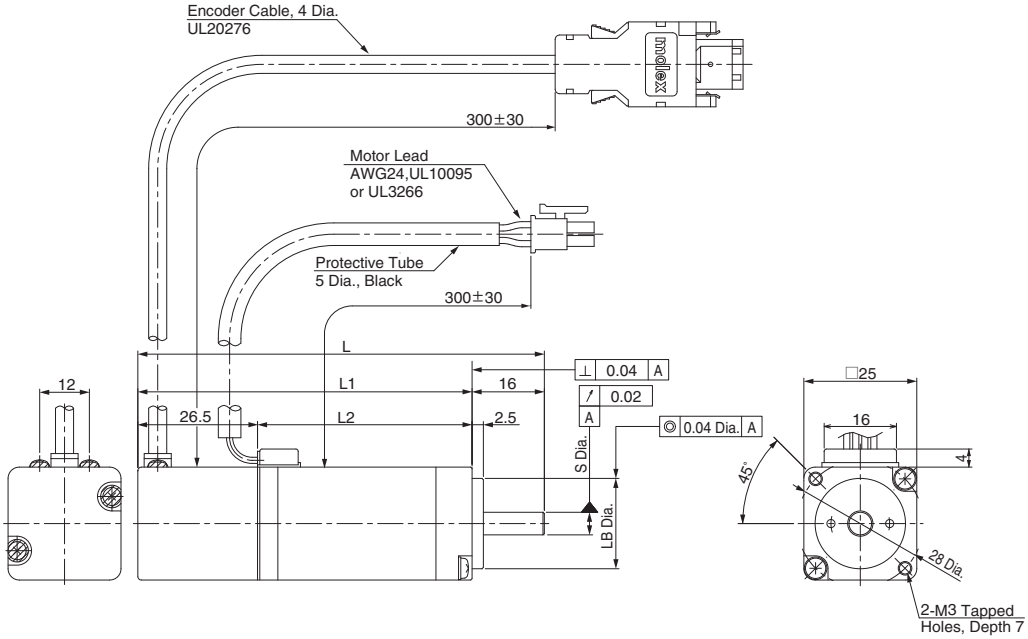

Model SGMMV-	L	L1	L2	Flange Dimensions		Approx. Mass [kg]
				S	LB	
A1A2A□ 1	70	54	27.5	$5^{0}_{-0.008}$	$20^{0}_{-0.021}$	0.13
A2A2A□ 1	80	64	37.5	$5^{0}_{-0.008}$	$20^{0}_{-0.021}$	0.17
A3A2A□ 1	90	74	47.5	$5^{0}_{-0.008}$	$20^{0}_{-0.021}$	0.21

Refer to the following section for information on connectors.

☞ ◆ *SGMMV-A1, -A2, and -A3 without Holding Brakes* (page 14)

■ Shaft End Specification

- Straight with Flat Seats

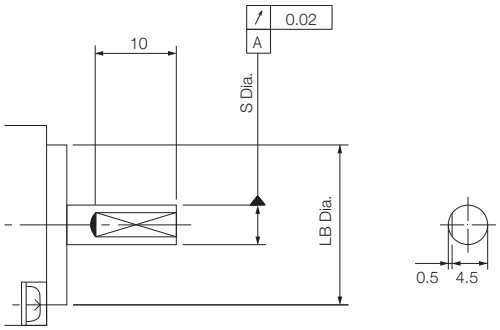

Servo Motors with Holding Brakes

◆ SGMMV-A1, -A2 and -A3

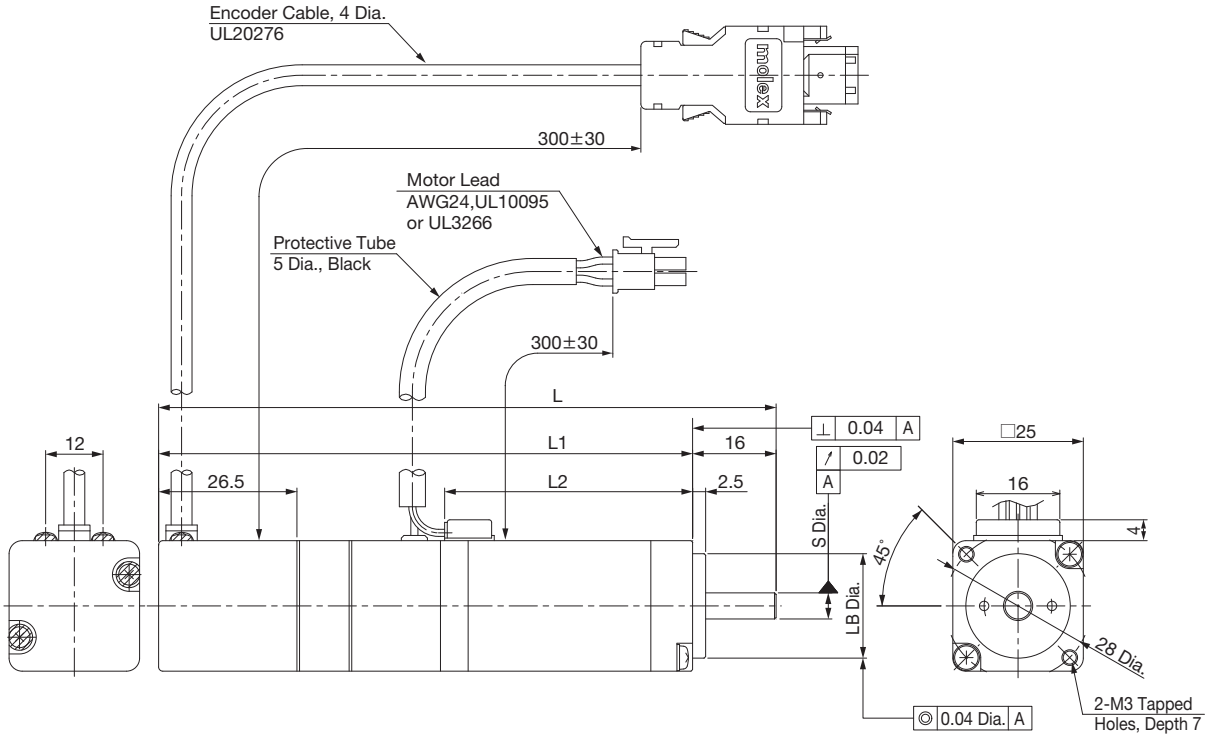

Model SGMMV-	L	L1	L2	Flange Dimensions		Approx. Mass [kg]
				S	LB	
A1A2A□ C	94.5	78.5	27.5	$5^{0}_{-0.008}$	$20^{0}_{-0.021}$	0.215
A2A2A□ C	108.5	92.5	37.5	$5^{0}_{-0.008}$	$20^{0}_{-0.021}$	0.27
A3A2A□ C	118.5	102.5	47.5	$5^{0}_{-0.008}$	$20^{0}_{-0.021}$	0.31

Refer to the following section for information on connectors.

☞ ◆ *SGMMV-A1, -A2, and -A3 with Holding Brakes* (page 14)

■ Shaft End Specification

• Straight with Flat Seats

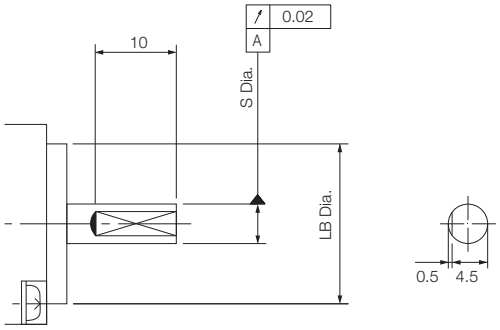

Connector Specifications

◆ SGMMV-A1, -A2, and -A3 without Holding Brakes

- Encoder Connector Specifications

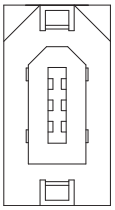

Model: 55102-0600
Manufacturer: Molex Japan LLC

Mating connector: 54280-0609

- Servo Motor Connector Specifications

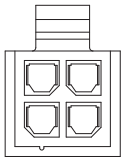

Receptacle: 43025-0400
Manufacturer: Molex Japan LLC

◆ SGMMV-A1, -A2, and -A3 with Holding Brakes

- Encoder Connector Specifications (24-bit Encoder)

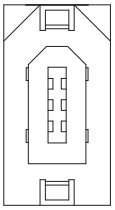

Model: 55102-0600
Manufacturer: Molex Japan LLC

Mating connector: 54280-0609

- Servo Motor Connector Specifications

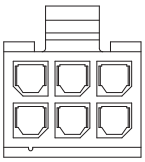

Receptacle: 43025-0600
Manufacturer: Molex Japan LLC

Selecting Cables

◆ Cable Configurations

The cables shown below are required to connect a Servo Motor to a SERVOPACK.

Encoder Cable of 20 m or Less

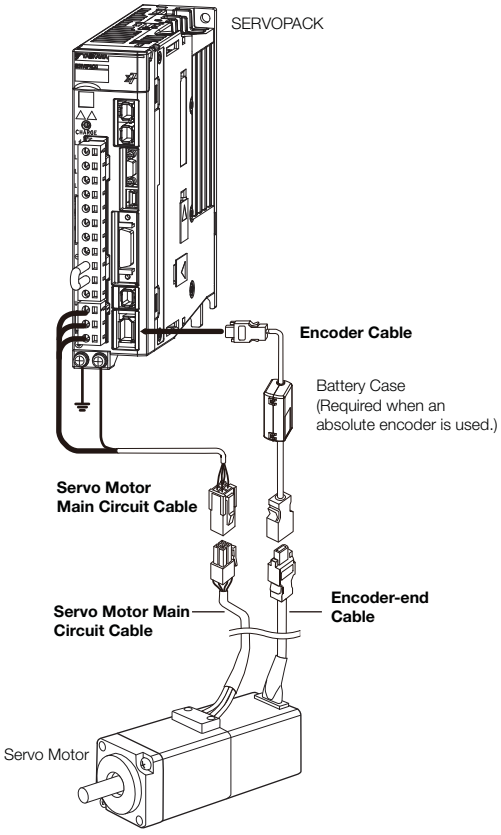

Encoder Cable of 30 m to 50 m (Relay Cable)

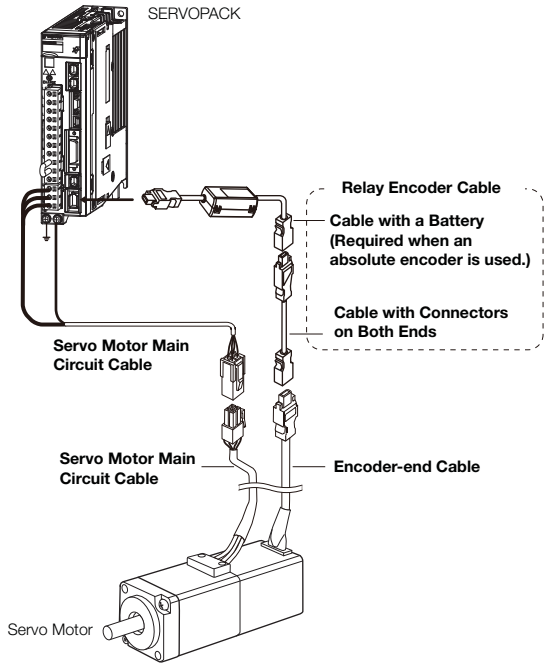

Note: 1. If the cable length exceeds 20 m, be sure to use a Relay Encoder Cable.

2. If you use a Servo Motor Main Circuit Cable that exceeds 20 m, the intermittent duty zone in the torque-motor speed characteristics will become smaller because the voltage drop increases.

3. Refer to the following manual for the following information.
   - Cable dimensional drawings and cable connection specifications
   - Order numbers and specifications of individual connectors for cables
   - Order numbers and specifications for wiring materials

   📖 *Σ-7-Series AC Servo Drive Peripheral Device Selection Manual* (Manual No.: SIEP S800001 32)

Servo Motor Main Circuit Cables

Servo Motor Model	Name	Length (L)	Order Number		Appearance
			Standard Cable	Flexible Cable*1*2	
SGMMV -A1, -A2, and -A3 10 W, 20 W, 30 W	For Servo Motors without Holding Brakes	3 m	JZSP-CF2M00-03-E	JZSP-CF2M20-03-E	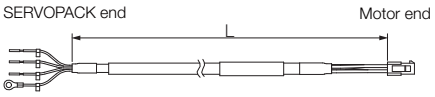
		5 m	JZSP-CF2M00-05-E	JZSP-CF2M20-05-E	
		10 m	JZSP-CF2M00-10-E	JZSP-CF2M20-10-E	
		15 m	JZSP-CF2M00-15-E	JZSP-CF2M20-15-E	
		20 m	JZSP-CF2M00-20-E	JZSP-CF2M20-20-E	
		30 m	JZSP-CF2M00-30-E	JZSP-CF2M20-30-E	
		40 m	JZSP-CF2M00-40-E	JZSP-CF2M20-40-E	
		50 m	JZSP-CF2M00-50-E	JZSP-CF2M20-50-E	
	For Servo Motors with Holding Brakes	3 m	JZSP-CF2M03-03-E	JZSP-CF2M23-03-E	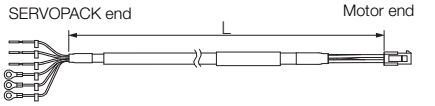
		5 m	JZSP-CF2M03-05-E	JZSP-CF2M23-05-E	
		10 m	JZSP-CF2M03-10-E	JZSP-CF2M23-10-E	
		15 m	JZSP-CF2M03-15-E	JZSP-CF2M23-15-E	
		20 m	JZSP-CF2M03-20-E	JZSP-CF2M23-20-E	
		30 m	JZSP-CF2M03-30-E	JZSP-CF2M23-30-E	
		40 m	JZSP-CF2M03-40-E	JZSP-CF2M23-40-E	
		50 m	JZSP-CF2M03-50-E	JZSP-CF2M23-50-E	

*1. Use Flexible Cables for moving parts of machines, such as robots.
*2. The recommended bending radius (R) is 90 mm or larger.

Encoder Cables of 20 m or Less

Servo Motor Model	Name	Length (L)	Order Number		Appearance
			Standard Cable	Flexible Cable*1*2	
All SGMMV models	Cables with Connectors on Both Ends (for incremental encoder)	3 m	JZSP-CMP00-03-E	JZSP-CMP10-03-E	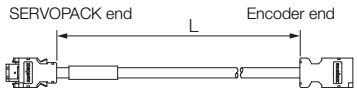
		5 m	JZSP-CMP00-05-E	JZSP-CMP10-05-E	
		10 m	JZSP-CMP00-10-E	JZSP-CMP10-10-E	
		15 m	JZSP-CMP00-15-E	JZSP-CMP10-15-E	
		20 m	JZSP-CMP00-20-E	JZSP-CMP10-20-E	
	Cables with Connectors on Both Ends (for absolute encoder: With Battery Case)	3 m	JZSP-CSP19-03-E	JZSP-CSP29-03-E	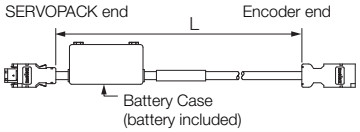
		5 m	JZSP-CSP19-05-E	JZSP-CSP29-05-E	
		10 m	JZSP-CSP19-10-E	JZSP-CSP29-10-E	
		15 m	JZSP-CSP19-15-E	JZSP-CSP29-15-E	
		20 m	JZSP-CSP19-20-E	JZSP-CSP29-20-E	

*1. Use Flexible Cables for moving parts of machines, such as robots.
*2. The recommended bending radius (R) is 68 mm or larger.

Relay Encoder Cables of 30 m to 50 m

Servo Motor Model	Name	Length (L)	Order Number for Standard Cable	Appearance
All SGMMV models	Cables with Connectors on Both Ends (for incremental or absolute encoder)	30 m	JZSP-UCMP00-30-E	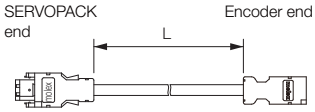
		40 m	JZSP-UCMP00-40-E	
		50 m	JZSP-UCMP00-50-E	
	Cable with a Battery Case (Required when an absolute encoder is used.)*	0.3 m	JZSP-CSP12-E	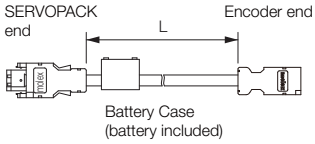

*This Cable is not required if a battery is connected to the host controller.

SGM7J Servo Motors (without Gear Box)

Model Designations

SGM7J - 01 A 7 D 6 1

(1st+2nd digits) (3rd digit) (4th digit) (5th digit) (6th digit) (7th digit)

Σ-7 Series Servo Motors: SGM7J

1st+2nd digits Rated Output

Code	Specification
A5	50 W
01	100 W
C2	150 W
02	200 W
04	400 W
06	600 W
08	750 W

3rd digit Power Supply Voltage

Code	Specification
A	200 VAC
D	400 VAC

4th digit Serial Encoder

Code	Specification
7	24-bit absolute
F	24-bit incremental

5th digit Design Revision Order

D: Global design revision (200 V)
F: Global design revision (400 V)

6th digit Shaft End

Code	Specification
2	Straight without key
6	Straight with key and tap
B	With two flat seats

7th digit Options

Code	Specification
1	Without options
C	With holding brake (24 VDC)
E	With oil seal and holding brake (24 VDC)
S	With oil seal

■ Non Stock Items

SGM7J Gear Motors

The SGM7J gear motor product family pairs SGM7J servo motors with high precision, low backlash inline planetary gear heads resulting in a portfolio of rotary actuators fit for a wide range of applications. The family of gear motors has been thoroughly tested and adheres to the high levels of quality and performance expected from Yaskawa.

The high precision gear heads offer a variety of application advantages:

- ① **Quiet operation** – helical cut gears contribute toward reduced vibration and noise
- ② **High precision** – a standard backlash of 5 arc-min make this gear head ideal for the most accurate applications
- ③ **High rigidity and torque capacity** – achieved with a design which incorporates uncaged needle roller bearings
- ④ **Optimized adapter bushing** – minimizes inertia allowing for more output torque to be realized
- ⑤ **No leakage through the seal** – high viscosity, anti-separation grease does not liquefy and does not migrate away from the gears
- **Maintenance-free** – no need to replace the grease for the life of the unit. The reducer can be positioned in any orientation

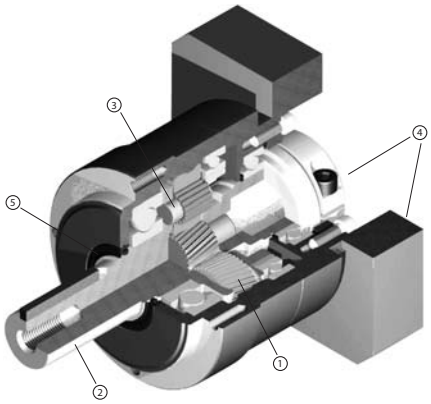

Model Designations

S7J 01 A C - VL 050 - 05

- S7J: Σ-7 Series Gear Motors: SGM7J
- 01: 1st+2nd digits
- A: 3rd digit
- C: 4th digit
- VL: 5th digit
- 050: 6th digit
- 05: 7th digit

1st+2nd digits Rated Output

Code	Specification
01	100 W
02	200 W
04	400 W
08	750 W
15	1.5 kW

3rd digit Power Supply Voltage

Code	Specification
A	200 VAC
D	400 VAC

4th digit Brake Option

Code	Specification
Blank	No brake
C	24 V Brake

5th digit Gear box backlash

Code	Specification
VL	5 arc-min backlash

6th digit Gear head frame size

Code	Specification
050	50 mm
070	70 mm
090	90 mm
120	120 mm
155	155 mm

7th digit Gear Ratio

Code	Specification
03	3:1 Ratio
05	5:1 Ratio
10	10:1 Ratio
25	25:1 Ratio
50	50:1 Ratio

Specifications and Ratings

Specifications (200 V Models)

Voltage		200 V						
Model SGM7J-		A5A	01A	C2A	02A	04A	06A	08A
Time Rating		Continuous						
Thermal Class		UL: B, CE: B						
Insulation Resistance		500 VDC, 10 MΩ min.						
Withstand Voltage		1,500 VAC for 1 minute						
Excitation		Permanent magnet						
Mounting		Flange-mounted						
Drive Method		Direct drive						
Rotation Direction		Counterclockwise (CCW) for forward reference when viewed from the load side						
Vibration Class[*1]		V15						
Environmental Conditions	Surrounding Air Temperature	0°C to 40°C (With derating, usage is possible between 40°C and 60°C.)[*4]						
	Surrounding Air Humidity	20% to 80% relative humidity (with no condensation)						
	Installation Site	• Must be indoors and free of corrosive and explosive gases. • Must be well-ventilated and free of dust and moisture. • Must facilitate inspection and cleaning. • Must have an altitude of 1,000 m or less. (With derating, usage is possible between 1,000 m and 2,000 m.)[*5] • Must be free of strong magnetic fields.						
	Storage Environment	Store the Servo Motor in the following environment if you store it with the power cable disconnected. Storage Temperature: -20°C to 60°C (with no freezing) Storage Humidity: 20% to 80% relative humidity (with no condensation)						
Shock Resistance[*2]	Impact Acceleration Rate at Flange	490 m/s^2						
	Number of Impacts	2 times						
Vibration Resistance[*3]	Vibration Acceleration Rate at Flange	49 m/s^2						
Applicable SERVOPACKs	SGD7S-	R70A	R90A	1R6A		2R8A	5R5A	
	SGD7W-	1R6A[*6], 2R8A[*6]		1R6A, 2R8A[*6]		2R8A 5R5A[*6] 7R6A[*6]	5R5A, 7R6A	

*1. A vibration class of V15 indicates a vibration amplitude of 15 μm maximum on the Servo Motor without a load at the rated motor speed.

*2. The shock resistance for shock in the vertical direction when the Servo Motor is mounted with the shaft in a horizontal position is given in the above table.

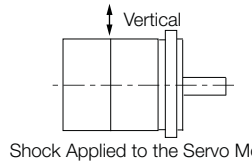

Shock Applied to the Servo Motor

*3. The vertical, side-to-side, and front-to-back vibration resistance for vibration in three directions when the Servo Motor is mounted with the shaft in a horizontal position is given in the above table. The strength of the vibration that the Servo Motor can withstand depends on the application. Always check the vibration acceleration rate that is applied to the Servo Motor with the actual equipment.

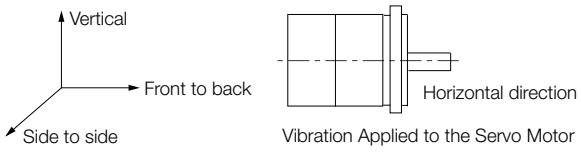

Vibration Applied to the Servo Motor

*4. If the surrounding air temperature will exceed 40°C, refer to the following section.

☞ *Applications Where the Surrounding Air Temperature of the Servo Motor Exceeds 40°C* (page 33)

*5. If the altitude will exceed 1,000 m, refer to the following section.

☞ *Applications Where the Altitude of the Servo Motor Exceeds 1,000 m* (page 34)

*6. If you use the Servo Motor together with a S-7W SERVOPACK, the control gain may not increase as much as with a Σ-7S SERVOPACK and other performances may be lower than those achieved with a Σ-7S SERVOPACK.

Specifications (400 V Models)

Voltage		400 V			
Model SGM7J-		02D	04D	08D	15D
Time Rating		Continuous			
Thermal Class		UL: B, CE: B			
Insulation Resistance		500 VDC, 10 MΩ min.			
Withstand Voltage		1,800 VAC for 1 minute			
Excitation		Permanent magnet			
Mounting		Flange-mounted			
Drive Method		Direct drive			
Rotation Direction		Counterclockwise (CCW) for forward reference when viewed from the load side			
Vibration Class*1		V15			
Environmental Conditions	Surrounding Air Temperature	0°C to 40°C (With derating, usage is possible between 40°C and 60°C.)*4			
	Surrounding Air Humidity	20% to 80% relative humidity (with no condensation)			
	Installation Site	• Must be indoors and free of corrosive and explosive gases. • Must be well-ventilated and free of dust and moisture. • Must facilitate inspection and cleaning. • Must have an altitude of 1,000 m or less. (With derating, usage is possible between 1,000 m and 2,000 m.)*5 • Must be free of strong magnetic fields.			
	Storage Environment	Store the Servo Motor in the following environment if you store it with the power cable disconnected. Storage Temperature: -20°C to 60°C (with no freezing) Storage Humidity: 20% to 80% relative humidity (with no condensation)			
Shock Resistance*2	Impact Acceleration Rate at Flange	490 m/s^2			
	Number of Impacts	2 times			
Vibration Resistance*3	Vibration Acceleration Rate at Flange	49 m/s^2			
Applicable SERVOPACKs	SGDV--	1r9		3R5	5R4

*1. A vibration class of V15 indicates a vibration amplitude of 15 μm maximum on the Servo Motor without a load at the rated motor speed.

*2. The shock resistance for shock in the vertical direction when the Servo Motor is mounted with the shaft in a horizontal position is given in the above table.

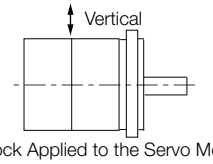

Shock Applied to the Servo Motor

*3. The vertical, side-to-side, and front-to-back vibration resistance for vibration in three directions when the Servo Motor is mounted with the shaft in a horizontal position is given in the above table. The strength of the vibration that the Servo Motor can withstand depends on the application. Always check the vibration acceleration rate that is applied to the Servo Motor with the actual equipment.

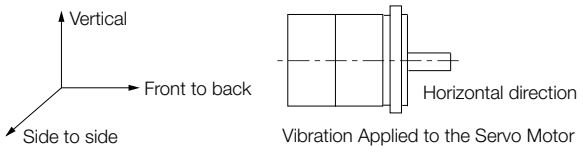

Vibration Applied to the Servo Motor

*4. If the surrounding air temperature will exceed 40°C, refer to the following section.
☞ *Applications Where the Surrounding Air Temperature of the Servo Motor Exceeds 40°C* (page 33)

*5. If the altitude will exceed 1,000 m, refer to the following section.
☞ *Applications Where the Altitude of the Servo Motor Exceeds 1,000 m* (page 34).

Ratings of Servo Motors (200 V Models)

Voltage			200 V						
Model SGM7J-			A5A	01A	C2A	02A	04A	06A	08A
Rated Output*1		W	50	100	150	200	400	600	750
Rated Torque*1, *2		N•m	0.159	0.318	0.477	0.637	1.27	1.91	2.39
Instantaneous Maximum Torque*1		N•m	0.557	1.11	1.67	2.23	4.46	6.69	8.36
Rated Current*1		Arms	0.55	0.85	1.6	1.6	2.5	4.2	4.4
Instantaneous Maximum Current*1		Arms	2.0	3.1	5.7	5.8	9.3	15.3	16.9
Rated Motor Speed*1		min^{-1}	3000						
Maximum Motor Speed*1		min^{-1}	6000						
Torque Constant		N•m/Arms	0.316	0.413	0.321	0.444	0.544	0.493	0.584
Motor Moment of Inertia		$\times 10^{-4}$ kg•m^2	0.0395 (0.0475)	0.0659 (0.0739)	0.0915 (0.0995)	0.263 (0.333)	0.486 (0.556)	0.800 (0.870)	1.59 (1.77)
Rated Power Rate*1		kW/s	6.40 (5.32)	15.3 (13.6)	24.8 (22.8)	15.4 (12.1)	33.1 (29.0)	45.6 (41.9)	35.9 (32.2)
Rated Angular Acceleration Rate*1		rad/s^2	40200 (33400)	48200 (43000)	52100 (47900)	24200 (19100)	26100 (22800)	23800 (21900)	15000 (13500)
Derating Rate for Servo Motor with Oil Seal		%	80	90			95		
Heat Sink Size (Aluminum)		mm	200 × 200 × 6		250 × 250 × 6				
Protective Structure*3			Totally enclosed, self-cooled, IP67						
Holding Brake Specifications*4	Rated Voltage	V	24 VDC±10%						
	Capacity	W	5.5			6		6.5	
	Holding Torque	N•m	0.159	0.318	0.477	0.637	1.27	1.91	2.39
	Coil Resistance	Ω (at 20°C)	104.8±10%			96±10%		88.6±10%	
	Rated Current	A (at 20°C)	0.23			0.25		0.27	
	Time Required to Release Brake	ms	60					80	
	Time Required to Brake	ms	100						
Allowable Load Moment of Inertia (Motor Moment of Inertia Ratio)			35 times			15 times	10 times	20 times	12 times
Allowable Shaft Loads*5	LF	mm	20			25			35
	Allowable Radial Load	N	78			245			392
	Allowable Thrust Load	N	54			74			147

Note: The values in parentheses are for Servo Motors with Holding Brakes.

*1. These values are for operation in combination with a SERVOPACK when the temperature of the armature winding is 100°C. The values for other items are at 20°C. These are typical values.

*2. The rated torques are the continuous allowable torque values at a surrounding air temperature of 40°C with an aluminum heat sink of the dimensions given in the table.

*3. This does not apply to the shaft opening. Protective structure specifications apply only when the special cable is used.

*4. Observe the following precautions if you use a Servo Motor with a Holding Brake.
- The holding brake cannot be used to stop the Servo Motor.
- The time required to release the brake and the time required to brake depend on which discharge circuit is used. Confirm that the operation delay time is appropriate for the actual equipment.
- The 24-VDC power supply is not provided by Yaskawa.

*5. The allowable shaft loads are illustrated in the following figure. Design the mechanical system so that the thrust and radial loads applied to the Servo Motor shaft end during operation do not exceed the values given in the table.

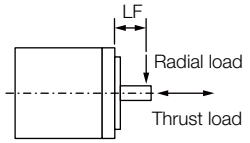

Ratings of Servo Motors (400 V Models)

Voltage			400 V			
Model SGM7J-			02D	04D	08D	15D
Rated Output*1		W	200	400	750	1500
Rated Torque*1, *2		N•m	0.637	1.27	2.39	4.77
Instantaneous Maximum Torque*1		N•m	2.23	4.46	8.36	14.3
Rated Current*1		Arms	1.5	1.4	2.2	4.5
Instantaneous Maximum Current*1		Arms	5.5	5.3	8.2	14.0
Rated Motor Speed*1		min^{-1}	3000			
Maximum Motor Speed*1		min^{-1}	6000			
Torque Constant		N•m/Arms	0.461	0.965	1.17	1.13
Motor Moment of Inertia		$\times 10^{-4}$ kg•m^2	0.263 (0.333)	0.486 (0.556)	1.59 (1.77)	4.02 (4.90)
Rated Power Rate*1		kW/s	15.4 (12,1)	33.1 (29.0)	35.9 (32.2)	56.6 (46.6)
Rated Angular Acceleration Rate*1		rad/s^2	24200 (19100)	26100 (22800)	15000 (13500)	11900 (9700)
Heat Sink Size (Aluminum)		mm	250 × 250 × 6			300 × 300 × 12
Protective Structure*3			Totally enclosed, self-cooled, IP67			
Holding Brake Specifications*4	Rated Voltage	V	24 VDC±10%			
	Capacity	W	6.0		6.5	7.5
	Holding Torque	N•m	0.637	1.27	2.39	4.77
	Coil Resistance	Ω (at 20°C)	96±10%		88.6±10%	76.8±10%
	Rated Current	A (at 20°C)	0.25		0.27	0.31
	Time Required to Release Brake	ms	60		80	
	Time Required to Brake	ms	100			
Allowable Load Moment of Inertia (Motor Moment of Inertia Ratio)			25 times		15 times	12 times
Allowable Shaft Loads*5	LF	mm	25		35	
	Allowable Radial Load	N	245		392	490
	Allowable Thrust Load	N	74		147	

Note: The values in parentheses are for Servo Motors with Holding Brakes.

*1. These values are for operation in combination with a SERVOPACK when the temperature of the armature winding is 100°C. The values for other items are at 20°C. These are typical values.

*2. The rated torques are the continuous allowable torque values at a surrounding air temperature of 40°C with an aluminum heat sink of the dimensions given in the table.

*3. This does not apply to the shaft opening. Protective structure specifications apply only when the special cable is used.

*4. Observe the following precautions if you use a Servo Motor with a Holding Brake.
- The holding brake cannot be used to stop the Servo Motor.
- The time required to release the brake and the time required to brake depend on which discharge circuit is used. Confirm that the operation delay time is appropriate for the actual equipment.
- The 24-VDC power supply is not provided by Yaskawa.

*5. The allowable shaft loads are illustrated in the following figure. Design the mechanical system so that the thrust and radial loads applied to the Servo Motor shaft end during operation do not exceed the values given in the table.

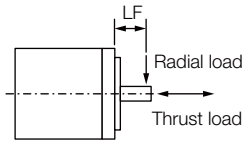

Servo Motor Torque-Motor Speed Characteristics (200V Models)

A : Continuous duty zone
B : Intermittent duty zone

——— (solid lines): With three-phase 200-V or single-phase 230-V input
- - - - - - - (dotted lines): With single-phase 200-V input
— – — (dashed-dotted lines): With single-phase 100-V input

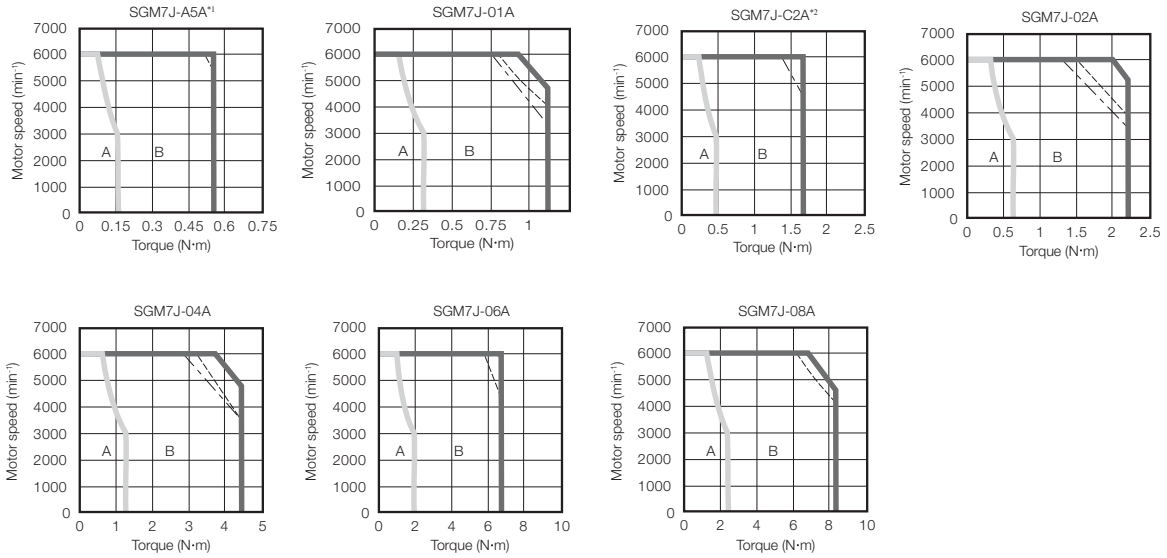

* The characteristics are the same for three-phase 200 V and single-phase 200 V.

Note: 1. These values are for operation in combination with a SERVOPACK when the temperature of the armature winding is 100°C. These are typical values.

2. The characteristics in the intermittent duty zone depend on the power supply voltage.
3. If the effective torque is within the allowable range for the rated torque, the Servo Motor can be used within the intermittent duty zone.
4. If you use a Servo Motor Main Circuit Cable that exceeds 20 m, the intermittent duty zone in the torque-motor speed characteristics will become smaller because the voltage drop increases.

Important

The SERVOPACK speed control range is 5,000:1. If you use Servo Motors at extremely low speeds (0.02 min^{-1} or lower at the gear output shaft), if you use Servo Motors with a one-pulse feed reference for extended periods, or under some other operating conditions, the gear bearing lubrication may be insufficient. That may cause deterioration of the bearing or increase the load ratio.
Contact your Yaskawa representative if you use a Servo Motor under these conditions.

* The moment of inertia for the Servo Motor and gear is the value without a holding brake. You can calculate the moment of inertia for a Servo Motor with a Gear and Holding Brake with the following formula.
Motor moment of inertia for a Servo Motor with a Holding Brake from *Ratings of Servo Motors (200 V Models)* (page 24) + Moment of inertia for the gear from the above table.

Servo Motor Torque-Motor Speed Characteristics (400V Models)

A : Continuous duty zone
B : Intermittent duty zone

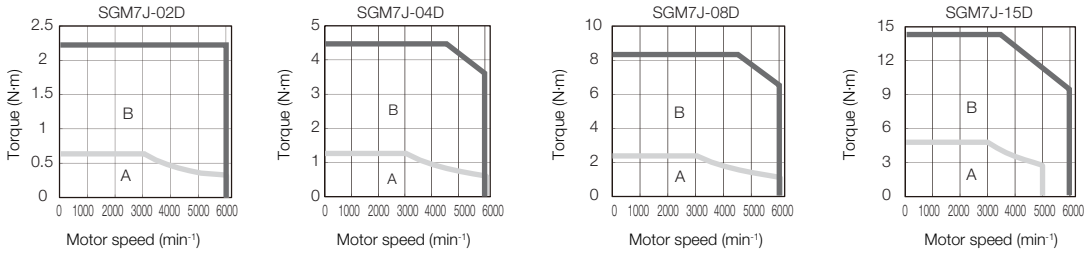

Note: 1. These values are for operation in combination with a SERVOPACK when the temperature of the armature winding is 100°C. These are typical values.

2. The characteristics in the intermittent duty zone depend on the power supply voltage. The intermittent duty zones in the graphs show the characteristics when a three-phase, 400-VAC power supply voltage is used.
3. If the effective torque is within the allowable range for the rated torque, the Servomotor can be used within the intermittent duty zone.
4. If you use a Servomotor Main Circuit Cable that exceeds 20 m, the intermittent duty zone in the torquemotor speed characteristics will become smaller because the voltage drop increases.

Ratings of Gear Motors (200 V Models)

Gear Motor Model Number SJ7_____	Base Servo Motor Model SGM7J-	Gear Ratio	Gearing Efficiency *1	Rated Speed (RPM)	Max Speed (RPM)	Rated Torque (Nm)*2	Peak Torque (Nm)*2	Motor Inertia ($x10^{-4}$ kg-m^2)	Gearhead Inertia ($x10^{-4}$ kg-m^2)	Allow-able Radial Load (N)	Allow-able Axial Load (N)	Back-lash (arc-min)	Class
01A□ -VL050-03	01A7D6□	3:1	95	1000	2000	0.906	3.16	0.0659 (0.0739)	0.053	710	640	5	IP65
01A□ -VL050-05		5:1		600	1200	1.51	5.27		0.036				
01A□ -VL050-10		10:1		300	600	3.02	10.5		0.030				
01A□ -VL050-25		25:1	90	120	240	7.16	18.0*3		0.034			7	
01A□ -VL070-50		50:1		60	120	14.3	50.0		0.051	1200	1100	5	
02A□ -VL050-03	02A7D6□	3:1	95	1000	2000	1.82	6.36	0.2630 (0.3330)	0.17	710	640	5	
02A□ -VL050-05		5:1		600	1200	3.03	10.6		0.15				
02A□ -VL050-10		10:1		300	600	6.05	12.0*3		0.15	1200	1100		
02A□ -VL070-25		25:1	90	120	240	14.3	50.2		0.17				
02A□ -VL070-50		50:1		60	120	28.7	50.0*3		0.16				
04A□ -VL050-03	04A7D6□	3:1	95	1000	2000	3.62	12.7	0.4860 (0.5560)	0.17	710	640		
04A□ -VL050-05		5:1		600	1200	6.03	18.0*3		0.15				
04A□ -VL070-10		10:1		300	600	12.1	35.0*3		0.17	1200	1100		
04A□ -VL070-25		25:1	90	120	240	28.6	50.0*3		0.17				
04A□ -VL090-50		50:1		60	120	57.2	125*3		0.27	2400	2200		
08A□ -VL070-03	08A7D6□	3:1	95	1000	2000	6.81	23.8	0.8000 (0.8700)	0.53	1200	1100		
08A□ -VL070-05		5:1		600	1200	11.4	39.7		0.46				
08A□ -VL090-10		10:1		300	600	22.7	79.4		0.70	2400	2200		
08A□ -VL090-25		25:1	90	120	240	53.8	125*3		0.74				
08A□ -VL120-50		50:1		60	120	108	330*3		0.76	4300	3900		

Note: The values in parentheses are for Servo Motors with Holding Brakes (indicated by value of □ in model numbers).

*1. The gear efficiency depends on operating conditions such as the output torque, motor speed, and temperature.

*2. The gear motor output torque is expressed by the following formula: Output Torque = (Servo Motor Output Torque) x (Gearing Ratio) x (Gearing Efficiency). The values in the table are typical values for the rated torque, rated motor speed, and a surrounding air temperature of 25°C. They are reference values only.

*3. The output torque of the gear motor is limited by the mechanical limit of the gear head. Operation above this limit could result in premature failure of the gear motor.


Important

During operation of the gear motor, losses due to inefficiencies of the gearing mechanism are generated. The losses vary as the conditions for gear motor torque and speed change. Temperature rise can vary based on the mechanical inefficiencies and the heat dissipation conditions. For heat dissipation conditions, check the gear and motor temperatures with the actual equipment. If operating temperatures are too high, implement the following measures.

- Decrease the load ratio.
- Change the heat dissipation conditions.
- Use forced-air cooling for the motor with a cooling fan or other means.

Ratings of Gear Motors (400 V Models)

Gear Motor Model Number S7J____	Base Servo Motor Model SGM7J-	Gear Ratio	Gearing Efficiency *1	Rated Speed (RPM)	Max Speed (RPM)	Rated Torque (Nm)*2	Peak Torque (Nm)*2	Motor Inertia ($x10^{-4}$ kg-m^2)	Gearhead Inertia ($x10^{-4}$ kg-m^2)	Allowable Radial Load (N)	Allowable Axial Load (N)	Backlash (arc-min)	Class
02D□ -VL050-03	02D7F6□	3:1	95	1000	2000	1.82	6.36	0.263 (0.333)	0.17	710	640	5	IP65
02D□ -VL050-05		5:1		600	1200	3.03	10.6		0.15				
02D□ -VL050-10		10:1		300	600	6.05	12.0*3		0.15	1200	1100		
02D□ -VL070-25		25:1	90	120	240	14.3	50.2		0.17				
02D□ -VL070-50		50:1		60	120	28.7	50.0*3		0.16				
04D□ -VL050-03	04D7F6□	3:1	95	1000	2000	3.62	12.7	0.486 (0.556)	0.17	710	640		
04D□ -VL050-05		5:1		600	1200	6.03	18.0*3		0.15				
04D□ -VL070-10		10:1		300	600	12.1	35.0*3		0.17	1200	1100		
04D□ -VL070-25		25:1	90	120	240	28.6	50.0*3		0.17				
04D□ -VL090-50		50:1		60	120	57.2	125*3		0.27	2400	2200		
08D□ -VL070-03	08D7F6□	3:1	95	1000	2000	6.81	23.8	1.59 (1.77)	0.53	1200	1100		
08D□ -VL070-05		5:1		600	1200	11.4	39.7		0.46				
08D□ -VL090-10		10:1		300	600	22.7	79.4		0.70	2400	2200		
08D□ -VL090-25		25:1	90	120	240	53.8	125*3		0.74				
08D□ -VL120-50		50:1		40*3	80*3	108	330*3		0.76	4300	3900		

Note: The values in parentheses are for Servo Motors with Holding Brakes (indicated by value of □ in model numbers).

*1. The gear efficiency depends on operating conditions such as the output torque, motor speed, and temperature.

*2. The gear motor output torque is expressed by the following formula: Output Torque = (Servo Motor Output Torque) x (Gearing Ratio) x (Gearing Efficiency). The values in the table are typical values for the rated torque, rated motor speed, and a surrounding air temperature of 25°C. They are reference values only.

*3. The output torque of the gear motor is limited by the mechanical limit of the gear head. Operation above this limit could result in premature failure of the gear motor.


Important

During operation of the gear motor, losses due to inefficiencies of the gearing mechanism are generated. The losses vary as the conditions for gear motor torque and speed change. Temperature rise can vary based on the mechanical inefficiencies and the heat dissipation conditions. For heat dissipation conditions, check the gear and motor temperatures with the actual equipment. If operating temperatures are too high, implement the following measures.

- Decrease the load ratio.
- Change the heat dissipation conditions.
- Use forced-air cooling for the motor with a cooling fan or other means.

Servo Motor Overload Protection Characteristics

The overload detection level is set for hot start conditions with a Servo Motor surrounding air temperature of 40°C.

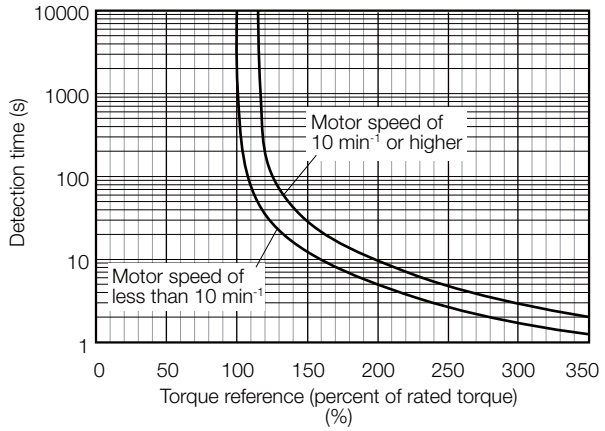

Note: The above overload protection characteristics do not mean that you can perform continuous duty operation with an output of 100% or higher.
Use the Servo Motor so that the effective torque remains within the continuous duty zone given in *Ratings of Servo Motors (400 V Models)* on page 25.

Allowable Load Moment of Inertia Scaling Factor for SERVOPACKs without Built-in Regenerative Resistors

The following graphs show the allowable load moment of inertia scaling factor of the motor speed for SERVOPACKs* without built-in regenerative resistors when an External Regenerative Resistor is not connected.

If the Servo Motor exceeds the allowable load moment of inertia, an overvoltage alarm may occur in the SERVOPACK.

These graphs provide reference data for deceleration at the rated torque or higher with a 200-VAC power supply input.

SGM7J-A5A

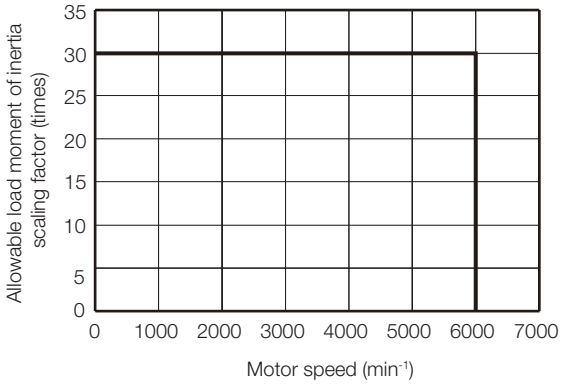

SGM7J-01A

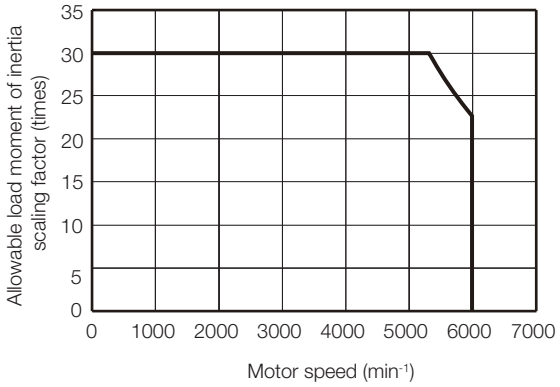

SGM7J-C2A

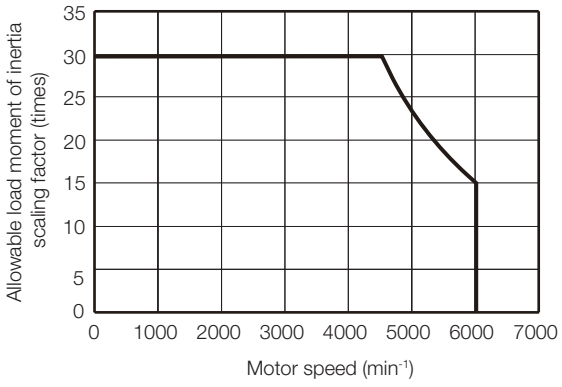

SGM7J-02A

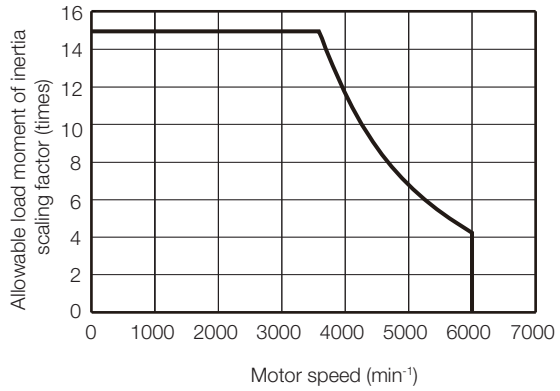

SGM7J-04A

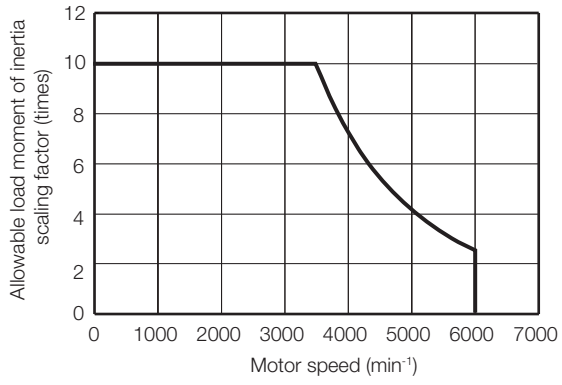

* Applicable SERVOPACK models: SGD7S-R70A, -R90A, -1R6A, or -2R8A

Servo Motor Heat Dissipation Conditions

The Servo Motor ratings are the continuous allowable values at a surrounding air temperature of 40°C when a heat sink is installed on the Servo Motor. If the Servo Motor is mounted on a small device component, the Servo Motor temperature may rise considerably because the surface for heat dissipation becomes smaller. Refer to the following graphs for the relation between the heat sink size and derating rate.

When using Servo Motors with derating, change the detection timing of overload warnings and overload alarms by referring to the motor overload detection level described in the following manual.

📖 *Σ-7-Series AC Servo Drive Rotary Servo Motor Product Manual* (Manual No.: SIEP S800001 36)

Note: The derating rates are applicable only when the average motor speed is less than or equal to the rated motor speed. If the average motor speed exceeds the rated motor speed, consult with your Yaskawa representative.

Important

The actual temperature rise depends on how the heat sink (i.e., the Servo Motor mounting section) is attached to the installation surface, what material is used for the Servo Motor mounting section, and the motor speed. Always check the Servo Motor temperature with the actual equipment.

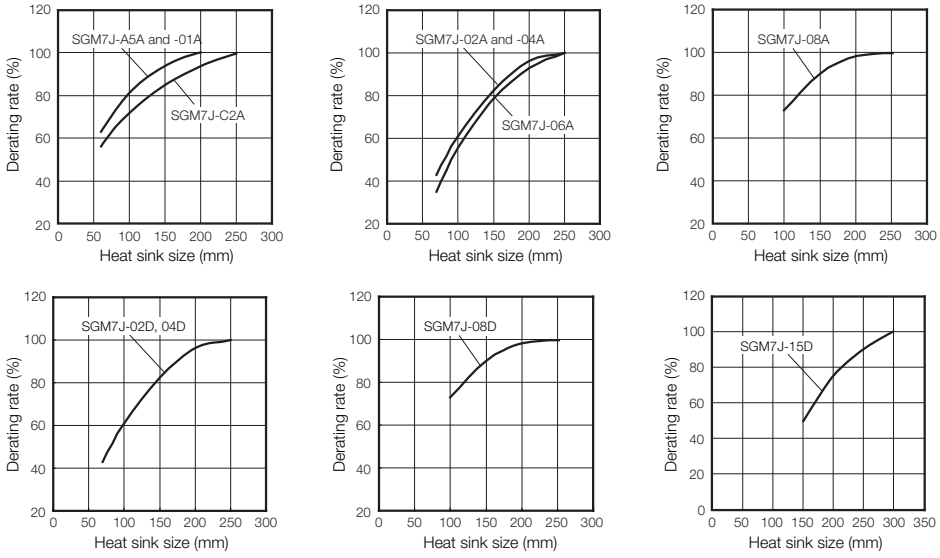

Applications Where the Surrounding Air Temperature of the Servo Motor Exceeds 40°C

The Servo Motor ratings are the continuous allowable values at a surrounding air temperature of 40°C. If you use a Servo Motor at a surrounding air temperature that exceeds 40°C (60°C max.), apply a suitable derating rate from the following graphs.

When using Servo Motors with derating, change the detection timing of overload warnings and overload alarms by referring to the motor overload detection level described in the following manual.

📖 *Σ-7-Series AC Servo Drive Rotary Servo Motor Product Manual* (Manual No.: SIEP S800001 36)

Note: 1. Use the combination of the SERVOPACK and Servo Motor so that the derating conditions are satisfied for both the SERVOPACK and Servo Motor.

2. The derating rates are applicable only when the average motor speed is less than or equal to the rated motor speed. If the average motor speed exceeds the rated motor speed, consult with your Yaskawa representative.

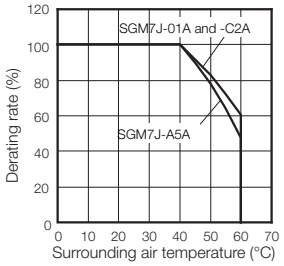

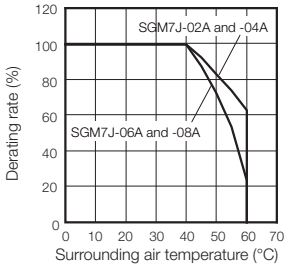

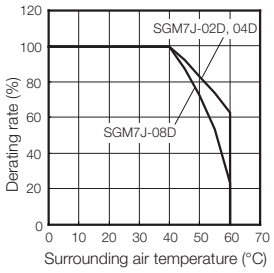

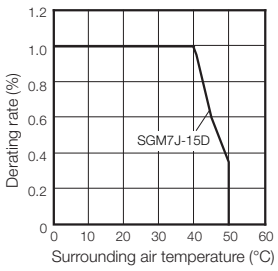

Applications Where the Altitude of the Servo Motor Exceeds 1,000 m

The Servo Motor ratings are the continuous allowable values at an altitude of 1,000 m or less. If you use a Servo Motor at an altitude that exceeds 1,000 m (2,000 m max.), the heat dissipation effect of the air is reduced. Apply the appropriate derating rate from the following graphs.

When using Servo Motors with derating, change the detection timing of overload warnings and overload alarms by referring to the motor overload detection level described in the following manual.

📖 *Σ-7-Series AC Servo Drive Rotary Servo Motor Product Manual* (Manual No.: SIEP S800001 36)

Note: 1. Use the combination of the SERVOPACK and Servo Motor so that the derating conditions are satisfied for both the SERVOPACK and Servo Motor.

2. The derating rates are applicable only when the average motor speed is less than or equal to the rated motor speed. If the average motor speed exceeds the rated motor speed, consult with your Yaskawa representative.

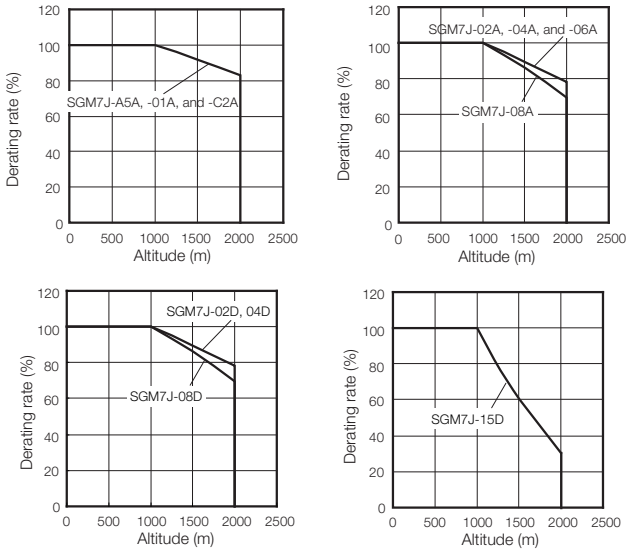

External Dimensions

◆ 200 V Models: SGM7J-A5, -01, and -C2

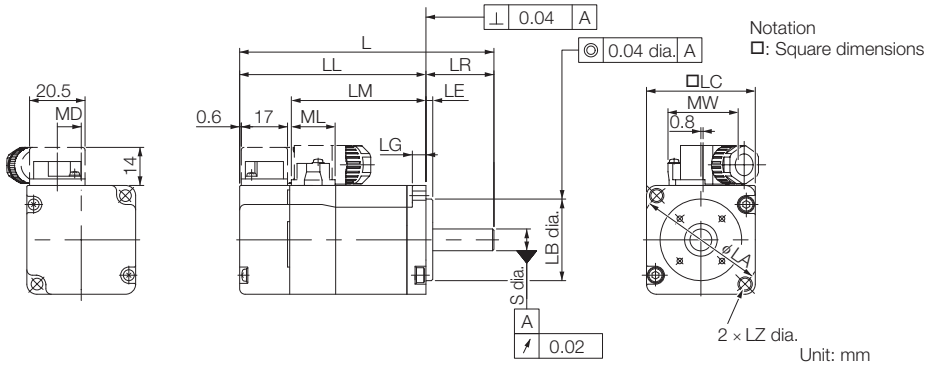

Model SGM7J-	L	LL	LM	Flange Dimensions							S
				LR	LE	LG	LC	LA	LB	LZ	
A5A□ A2□	81.5 (122)	56.5 (97)	37.9	25	2.5	5	40	46	$30^{0}_{-0.021}$	4.3	$8^{0}_{-0.009}$
01A□ A2□	93.5 (134)	68.5 (109)	49.9	25	2.5	5	40	46	$30^{0}_{-0.021}$	4.3	$8^{0}_{-0.009}$
C2A□ A2□	105.5 (153.5)	80.5 (128.5)	61.9	25	2.5	5	40	46	$30^{0}_{-0.021}$	4.3	$8^{0}_{-0.009}$

Model SGM7J-	MD	MW	ML	Approx. Mass [kg]
A5A□ A2□	8.8	25.8	16.1	0.3 (0.6)
01A□ A2□	8.8	25.8	16.1	0.4 (0.7)
C2A□ A2□	8.8	25.8	16.1	0.5 (0.8)

Note: 1. The values in parentheses are for Servo Motors with Holding Brakes.
2. Refer to the following section for detailed shaft end specifications.
☞ **400 V Models: SGM7J-02, -04 (page 37)**

■ Specifications of Options

• Oil Seal

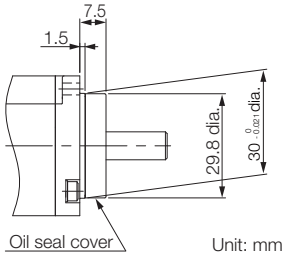

◆ 200 V Models: SGM7J-02, -04, -06, and -08

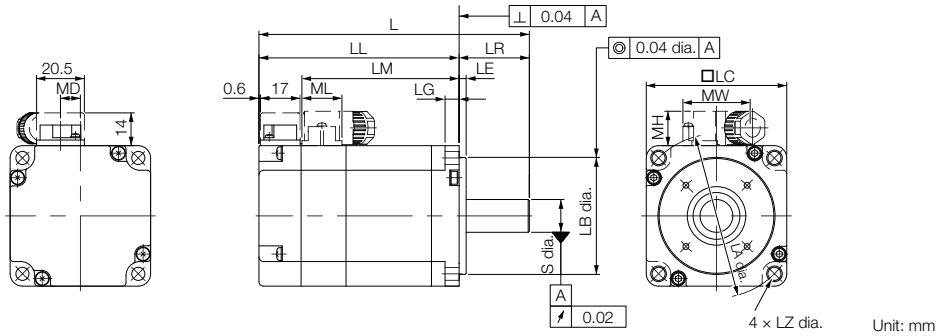

Unit: mm

Model SGM7J-	L	LL	LM	Flange Dimensions							S
				LR	LE	LG	LC	LA	LB	LZ	
02A□ A2□	99.5 (140)	69.5 (110)	51.2	30	3	6	60	70	$50^{0}_{-0.025}$	5.5	$14^{0}_{-0.011}$
04A□ A2□	115.5 (156)	85.5 (126)	67.2	30	3	6	60	70	$50^{0}_{-0.025}$	5.5	$14^{0}_{-0.011}$
06A□ A2□	137.5 (191.5)	107.5 (161.5)	89.2	30	3	6	60	70	$50^{0}_{-0.025}$	5.5	$14^{0}_{-0.011}$
08A□ A2□	137 (184)	97 (144)	78.5	40	3	8	80	90	$70^{0}_{-0.030}$	7	$19^{0}_{-0.013}$

Model SGM7J-	MD	MW	MH	ML	Approx. Mass [kg]
02A□ A2□	8.5	28.7	14.7	17.1	0.8 (1.4)
04A□ A2□	8.5	28.7	14.7	17.1	1.1 (1.7)
06A□ A2□	8.5	28.7	14.7	17.1	1.6 (2.2)
08A□ A2□	13.6	38	14.7	19.3	2.2 (2.8)

Note: 1. The values in parentheses are for Servo Motors with Holding Brakes.

2. Refer to the following section for detailed shaft end specifications.

☞ **400 V Models: SGM7J-02, -04 (page 37)**

■ Specifications of Options

• Oil Seal

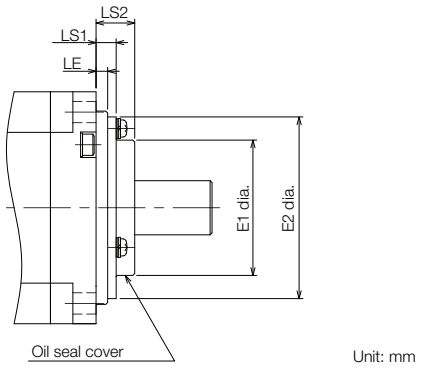

Unit: mm

Model SGM7J-	Dimensions with Oil Seal			
	E1	E2	LS1	LS2
02A, 04A, 06A	35	47	5.2	10
08A	47	61	5.5	11

◆ 400 V Models: SGM7J-02, -04

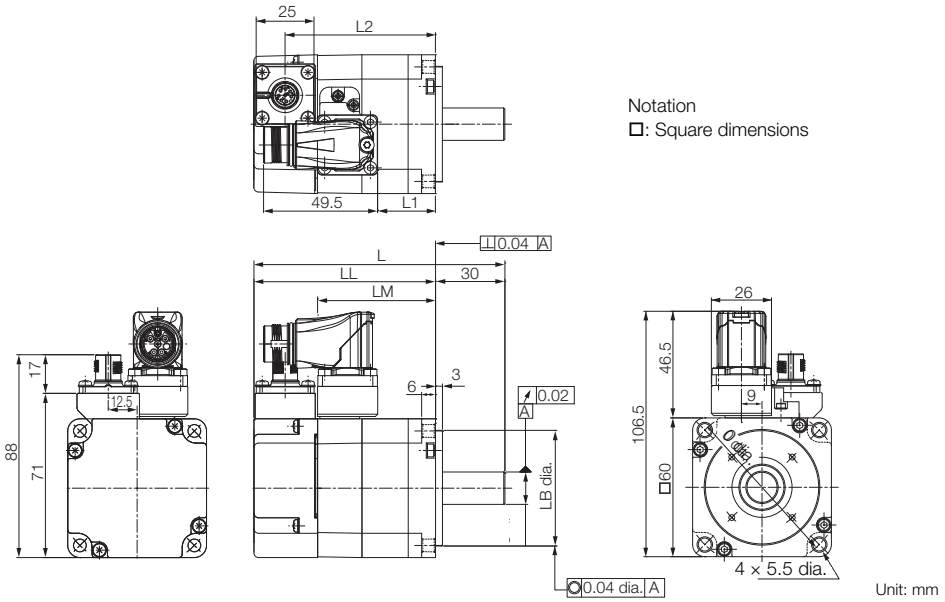

Unit: mm

Model SGM7J-	L	LL	LM	LB	S	L1	L2	Approx. Mass [kg]
02D□ F2□	108.5 (148.5)	78.5 (118.5)	51.2	$50^{0}_{-0.025}$	$14^{0}_{-0.011}$	25	65 (105)	0.9 (1.5)
04A□ F2□	125 (165)	95 (135)	67.2	$50^{0}_{-0.025}$	$14^{0}_{-0.011}$	41.5	81.5 (121.5)	1.2 (1.8)

Note: The values in parentheses are for Servo Motors with Holding Brakes

■ Specifications of Options

• Oil Seal

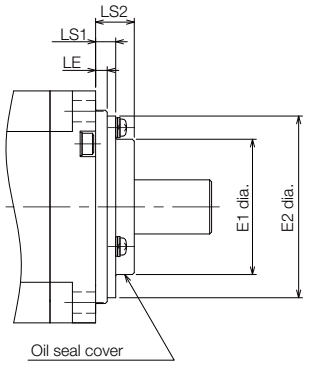

Unit: mm

◆ 400 V Model: SGM7J-08

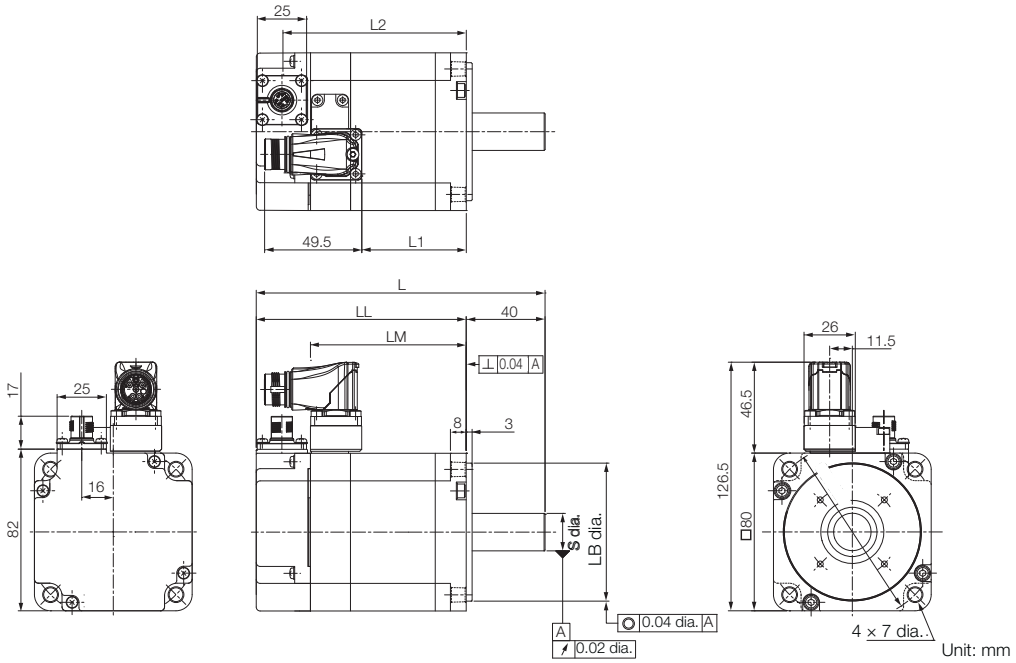

Model SGM7J-	L	LL	LM	LB	S	L1	L2	Approx. Mass [kg]
08D□ F2□	146.5 (193.5)	106.5 (153.5)	79	$70^{0}_{-0.030}$	$19^{0}_{-0.013}$	53	93 (121.5)	2.3 (2.9)

Note: The values in parentheses are for Servo Motors with Holding Brakes.

■ Specifications of Options

• Oil Seal

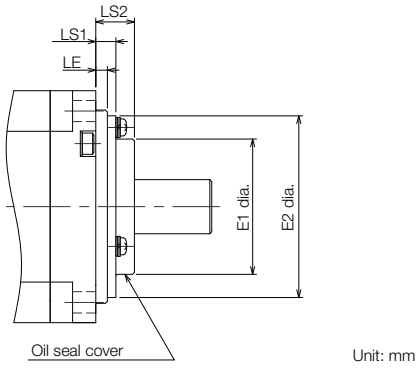

◆ 400 V Models: SGM7J-15

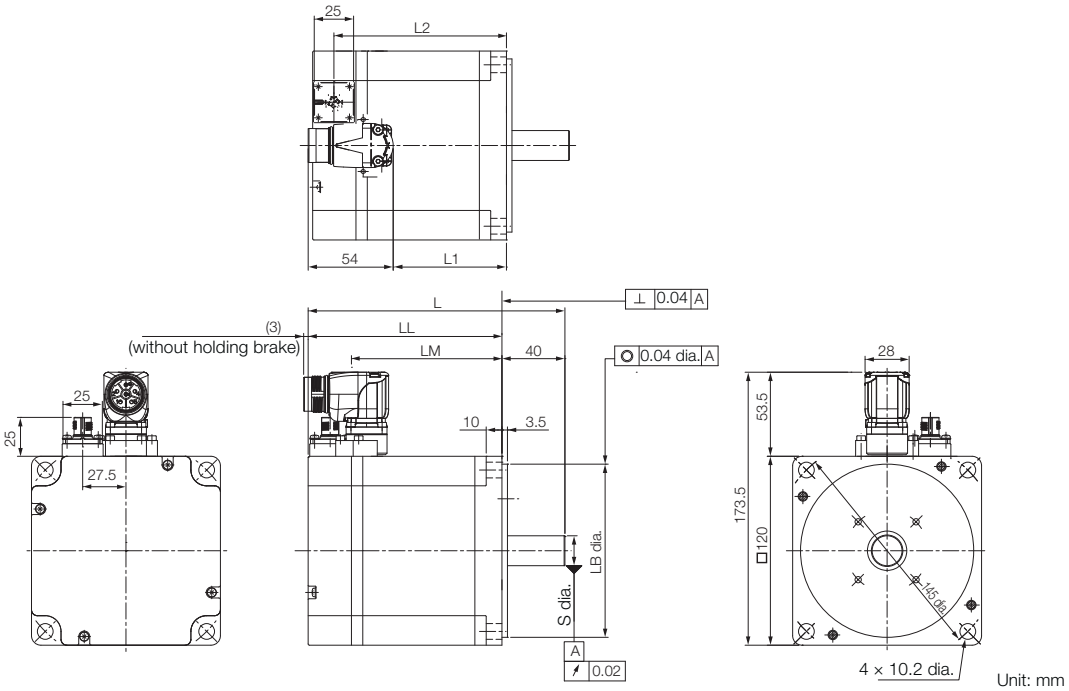

Unit: mm

Model SGM7J-	L	LL	LM	LB	S	L1	L2	Approx. Mass [kg]
15D□ F2□	163.5 (196.5)	123.5 (156.5)	95.6	$110^{0}_{-0.035}$	$19^{0}_{-0.013}$	72	110 (143)	6.4 (8.1)

Note: The values in parentheses are for Servo Motors with Holding Brakes.

◆ Gear Motor Models: 100W, 200W, 400W (S7J01, S7J02, S7J04)

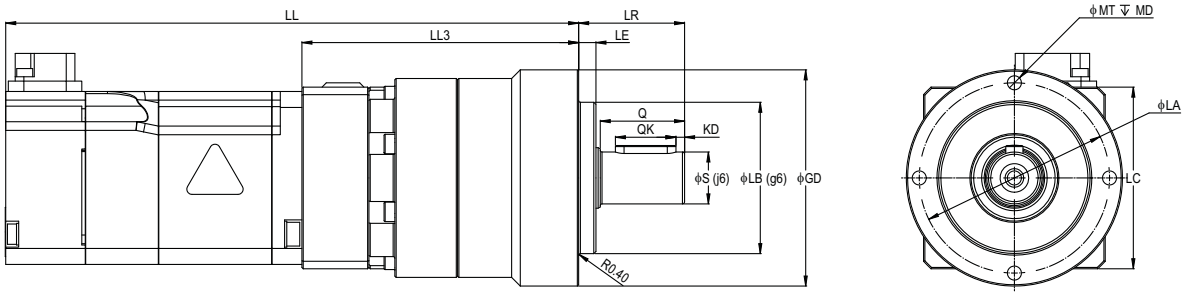

Shaft Detail (VL050 Models Only)

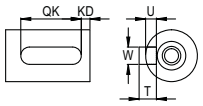

Shaft Detail (All Other Models)

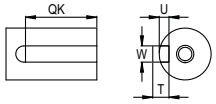

	Model S7J	LL	LL3	LR	LE	ϕS	ϕLB	ϕGD	LC	ϕLA	ϕMT	MD	Q	QK	KD	W	U	T
100 W Models																		
200 V	01A□ -VL050-03	133.5 (174)	65	24.5	4	12	35	50	42	44	M4	8	19.5	14	2	4	2.5	4
	01A□ -VL050-05																	
	01A□ -VL050-10																	
	01A□ -VL050-25	150 (190.5)	81.5															
	01A□ -VL070-50	163.5 (204)	95	36	5	16	52	70	52	62	M5	10	28	22	0	5	3	5
200 W Models																		
200 V	02A□ -VL050-03	137.5 (178	68	24.5	4	12	35	50	65	44	M4	8	19.5	14	2	4	2.5	4
	02A□ -VL050-05																	
	02A□ -VL050-10																	
	02A□ -VL070-25	170.5 (211)	101	36	5	16	52	70		62	M5	10	28	22	0	5	3	5
	02A□ -VL070-50																	
400 V	02D□ -VL050-03	146.5 (186.5)	68	24.5	4	12	35	50	65	44	M4	8	19.5	14	2	4	2.5	4
	02D□ -VL050-05																	
	02D□ -VL050-10																	
	02D□ -VL070-25	179.5 (219.5)	101	36	5	16	52	70		62	M5	10	28	22	0	5	3	5
	02D□ -VL070-50																	
400 W Models																		
200 V	04A□ -VL050-03	153.5 (194)	68	24.5	4	12	35	50	65	44	M4	8	19.5	14	2	4	2.5	4
	04A□ -VL050-05																	
	04A□ -VL070-10	165.5 (206)	80	36	5	16	52	70		62	M5	10	28	22	0	5	3	5
	04A□ -VL070-25	186.5 (227)	101															
	04A□ -VL090-50	204.5 (245)	119	46	7	22	68	90		80	M6	12	36	28		6	3.5	6
400 V	04D□ -VL050-03	163 (203)	68	24.5	4	12	35	50	65	44	M4	8	19.5	14	2	4	2.5	4
	04D□ -VL050-05																	
	04D□ -VL070-10	175 (215)	80	36	5	16	52	70		62	M5	10	28	22	0	5	3	5
	04D□ -VL070-25	196 (236)	101															
	04D□ -VL090-50	214 (254)	119	46	7	22	68	90		80	M6	12	36	28		6	3.5	6

Note: The values in parentheses are for Servo Motors with Holding Brakes.

◆ Gear Motor Models: 750W (S7J08)

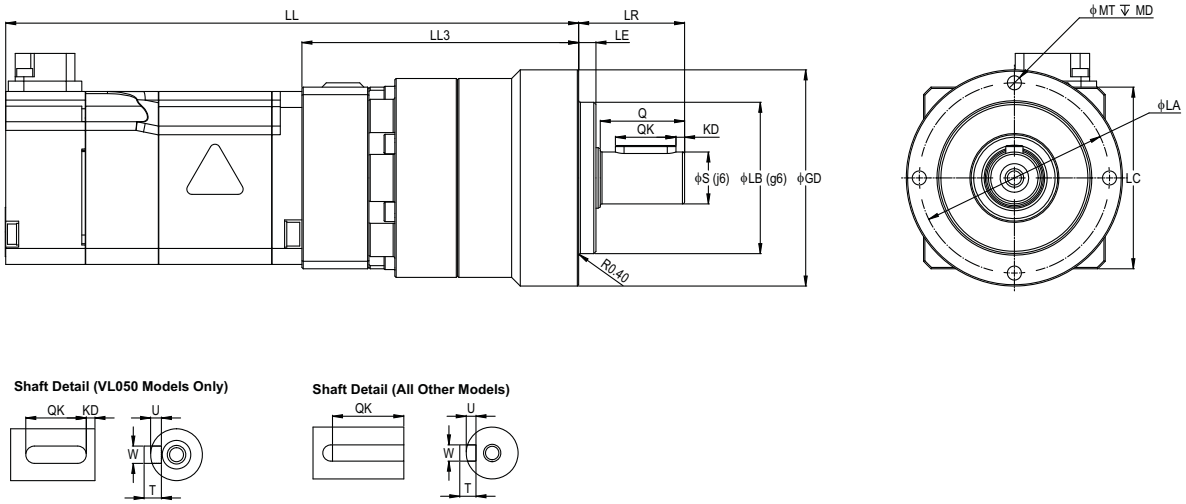

Shaft Detail (VL050 Models Only)

Shaft Detail (All Other Models)

Model S7J		LL	LL3	LR	LE	ϕS	ϕLB	ϕGD	LC	ϕLA	ϕMT	MD	Q	QK	KD	W	U	T
750 W Models																		
200 V	08A□ -VL070-03	191 (238)	94	36	5	16	52	70	80	62	M5	10	28	22	0	5	3	5
	08A□ -VL070-05																	
	08A□ -VL090-10	204 (251)	107	46	7	22	68	90		80	M6	12	36	28		6	3.5	6
	08A□ -VL090-25	226 (273)	129															
	08A□ -VL090-50	241.5 (288.5)	144.5	70	9	32	90	120		108	M8	16	58	45		10	5	8
400 V	08D□ -VL070-03	200.5 (247.5)	94	36	5	16	52	70	80	62	M5	10	28	22	0	5	3	5
	08D□ -VL070-05																	
	08A□ -VL090-10	213.5 (260.5)	107	46	7	22	68	90		80	M6	12	36	28		6	3.5	6
	08D□ -VL090-25	235.5 (282.5)	129															
	08D□ -VL090-50	251 (298)	144.5	70	9	32	90	120		108	M8	16	58	45		10	5	8

Note: The values in parentheses are for Servo Motors with Holding Brakes.

Shaft End Specifications

◆ SGM7J-□□□□□□□

Code	Specification
2	Straight without key
6	Straight with key and tap for one location (Key slot is JIS B1301-1996 fastening type.)
B	With two flat seats

Shaft End Details		Servo Motor Model SGM7J-									
		A5A	01A	C2A	02A	04A	06A	08A	02D	04D	08D	15D
Code: 2 (Straight without Key)												
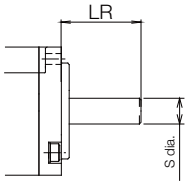	LR	25			30			40	30			40
	S	$8^{0}_{-0.009}$			$14^{0}_{-0.011}$			$19^{0}_{-0.013}$	$14^{0}_{-0.011}$			$19^{0}_{-0.013}$
Code: 6 (Straight with Key and Tap)												
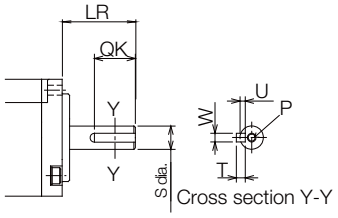	LR	25			30			40	30			40
	QK	14			14			22	14			22
	S	$8^{0}_{-0.009}$			$14^{0}_{-0.011}$			$19^{0}_{-0.013}$	$14^{0}_{-0.011}$			$19^{0}_{-0.013}$
	W	3			5			6	5			6
	T	3			5			6	5			6
	U	1.8			3			3.5	3			3.5
	P	M3 × 6L			M5 × 8L			M6 × 10L	M5 × 8L			M6 × 10L
Code: B (with Two Flat Seats)												
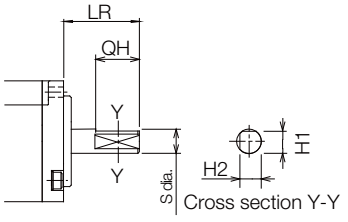	LR	25			30			40	N/A			
	QH	15			15			22				
	S	$8^{0}_{-0.009}$			$14^{0}_{-0.011}$			$19^{0}_{-0.013}$				
	H1	7.5			13			18				
	H2	7.5			13			18				

Selecting Cables

◆ Cable Configurations

The cables shown below are required to connect a Servo Motor to a SERVOPACK.

Encoder Cable of 20 m or Less

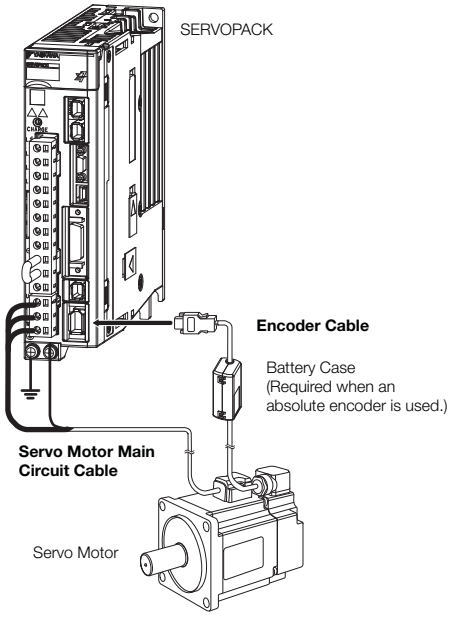

Encoder Cable of 30 m to 50 m (Relay Cable)

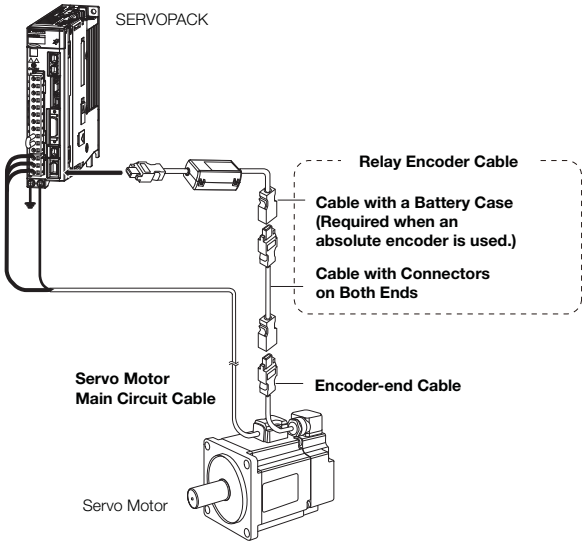

Note: 1. Cables with connectors on both ends that are compliant with an IP67 protective structure and European Safety

2. If the cable length exceeds 20 m, be sure to use a Relay Encoder Cable.
3. If you use a Servo Motor Main Circuit Cable that exceeds 20 m, the intermittent duty zone in the torque-motor speed characteristics will become smaller because the voltage drop increases.
4. Refer to the following manual for the following information.
   - Cable dimensional drawings and cable connection specifications
   - Order numbers and specifications of individual connectors for cables
   - Order numbers and specifications for wiring materials

   📖 *Σ-7-Series AC Servo Drive Peripheral Device Selection Manual* (Manual No.: SIEP S800001 32)

Important

For the following Servo Motor models, there are different order numbers for the Servo Motor Main Circuit Cables and Encoder Cables depending on the cable installation direction. Confirm the order numbers before you order.

- All SGM7J models

Cable Installed toward Load

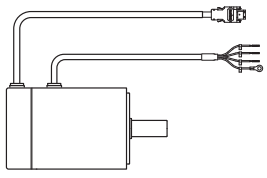

Cable Installed away from Load

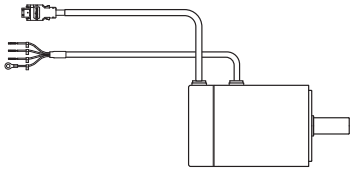

Servo Motor Main Circuit Cables (200 V Models)

Servo Motor Model	Name	Length (L)	Order Number			Appearance
			Standard Cable	Flexible Cable*	Flexible/Shielded	
SGM7J-A5 to -C2 50 W to 150 W (200V)	Power cable for Servo Motors without Holding Brakes Cable installed toward load	3 m	JZSP-C7M10F-03-E	JZSP-C7M12F-03-E	YAI-CSM21-03-P-E	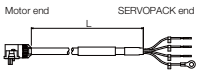
		5 m	JZSP-C7M10F-05-E	JZSP-C7M12F-05-E	YAI-CSM21-05-P-E	
		10 m	JZSP-C7M10F-10-E	JZSP-C7M12F-10-E	YAI-CSM21-10-P-E	
		15 m	JZSP-C7M10F-15-E	JZSP-C7M12F-15-E	YAI-CSM21-15-P-E	
		20 m	JZSP-C7M10F-20-E	JZSP-C7M12F-20-E	YAI-CSM21-20-P-E	
		30 m	JZSP-C7M10F-30-E	JZSP-C7M12F-30-E	YAI-CSM21-30-P-E	
		40 m	JZSP-C7M10F-40-E	JZSP-C7M12F-40-E	YAI-CSM21-40-P-E	
		50 m	JZSP-C7M10F-50-E	JZSP-C7M12F-50-E	YAI-CSM21-50-P-E	
SGM7J-02 to -06 200 W to 600 W (200V)		3 m	JZSP-C7M20F-03-E	JZSP-C7M22F-03-E	YAI-CSM22-03-P-E	
		5 m	JZSP-C7M20F-05-E	JZSP-C7M22F-05-E	YAI-CSM22-05-P-E	
		10 m	JZSP-C7M20F-10-E	JZSP-C7M22F-10-E	YAI-CSM22-10-P-E	
		15 m	JZSP-C7M20F-15-E	JZSP-C7M22F-15-E	YAI-CSM22-15-P-E	
		20 m	JZSP-C7M20F-20-E	JZSP-C7M22F-20-E	YAI-CSM22-20-P-E	
		30 m	JZSP-C7M20F-30-E	JZSP-C7M22F-30-E	YAI-CSM22-30-P-E	
		40 m	JZSP-C7M20F-40-E	JZSP-C7M22F-40-E	YAI-CSM22-40-P-E	
		50 m	JZSP-C7M20F-50-E	JZSP-C7M22F-50-E	YAI-CSM22-50-P-E	
SGM7J-08 750 W (200V)		3 m	JZSP-C7M30F-03-E	JZSP-C7M32F-03-E	YAI-CSM23-03-P-E	
		5 m	JZSP-C7M30F-05-E	JZSP-C7M32F-05-E	YAI-CSM23-05-P-E	
		10 m	JZSP-C7M30F-10-E	JZSP-C7M32F-10-E	YAI-CSM23-10-P-E	
		15 m	JZSP-C7M30F-15-E	JZSP-C7M32F-15-E	YAI-CSM23-15-P-E	
		20 m	JZSP-C7M30F-20-E	JZSP-C7M32F-20-E	YAI-CSM23-20-P-E	
		30 m	JZSP-C7M30F-30-E	JZSP-C7M32F-30-E	YAI-CSM23-30-P-E	
		40 m	JZSP-C7M30F-40-E	JZSP-C7M32F-40-E	YAI-CSM23-40-P-E	
		50 m	JZSP-C7M30F-50-E	JZSP-C7M32F-50-E	YAI-CSM23-50-P-E	
SGM7J-A5 to -C2 50 W to 150 W (200V)	Power cable for Servo Motors without Holding Brakes Cable installed away from load	3 m	JZSP-C7M10G-03-E	JZSP-C7M12G-03-E	N/A	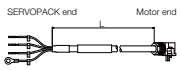
		5 m	JZSP-C7M10G-05-E	JZSP-C7M12G-05-E		
		10 m	JZSP-C7M10G-10-E	JZSP-C7M12G-10-E		
		15 m	JZSP-C7M10G-15-E	JZSP-C7M12G-15-E		
		20 m	JZSP-C7M10G-20-E	JZSP-C7M12G-20-E		
		30 m	JZSP-C7M10G-30-E	JZSP-C7M12G-30-E		
		40 m	JZSP-C7M10G-40-E	JZSP-C7M12G-40-E		
		50 m	JZSP-C7M10G-50-E	JZSP-C7M12G-50-E		
SGM7J-02 to -06 200 W to 600 W (200V)		3 m	JZSP-C7M20G-03-E	JZSP-C7M22G-03-E		
		5 m	JZSP-C7M20G-05-E	JZSP-C7M22G-05-E		
		10 m	JZSP-C7M20G-10-E	JZSP-C7M22G-10-E		
		15 m	JZSP-C7M20G-15-E	JZSP-C7M22G-15-E		
		20 m	JZSP-C7M20G-20-E	JZSP-C7M22G-20-E		
		30 m	JZSP-C7M20G-30-E	JZSP-C7M22G-30-E		
		40 m	JZSP-C7M20G-40-E	JZSP-C7M22G-40-E		
		50 m	JZSP-C7M20G-50-E	JZSP-C7M22G-50-E		
SGM7J-08 750 W (200V)		3 m	JZSP-C7M30G-03-E	JZSP-C7M32G-03-E		
		5 m	JZSP-C7M30G-05-E	JZSP-C7M32G-05-E		
		10 m	JZSP-C7M30G-10-E	JZSP-C7M32G-10-E		
		15 m	JZSP-C7M30G-15-E	JZSP-C7M32G-15-E		
		20 m	JZSP-C7M30G-20-E	JZSP-C7M32G-20-E		
		30 m	JZSP-C7M30G-30-E	JZSP-C7M32G-30-E		
		40 m	JZSP-C7M30G-40-E	JZSP-C7M32G-40-E		
		50 m	JZSP-C7M30G-50-E	JZSP-C7M32G-50-E		

Servo Motor Model	Name	Length (L)	Order Number			Appearance
			Standard Cable	Flexible Cable*	Flexible/Shielded	
SGM7J-A5 to -C2 50 W to 150 W (200V)	Power cable for Servo Motors with Holding Brakes Cable installed toward load	3 m	JZSP-C7M13F-03-E	JZSP-C7M14F-03-E	YAI-CSM31-03-P-E	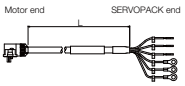
		5 m	JZSP-C7M13F-05-E	JZSP-C7M14F-05-E	YAI-CSM31-05-P-E	
		10 m	JZSP-C7M13F-10-E	JZSP-C7M14F-10-E	YAI-CSM31-10-P-E	
		15 m	JZSP-C7M13F-15-E	JZSP-C7M14F-15-E	YAI-CSM31-15-P-E	
		20 m	JZSP-C7M13F-20-E	JZSP-C7M14F-20-E	YAI-CSM31-20-P-E	
		30 m	JZSP-C7M13F-30-E	JZSP-C7M14F-30-E	YAI-CSM31-30-P-E	
		40 m	JZSP-C7M13F-40-E	JZSP-C7M14F-40-E	YAI-CSM31-40-P-E	
		50 m	JZSP-C7M13F-50-E	JZSP-C7M14F-50-E	YAI-CSM31-50-P-E	
SGM7J-02 to -06 200 W to 600 W (200V)		3 m	JZSP-C7M23F-03-E	JZSP-C7M24F-03-E	YAI-CSM32-03-P-E	
		5 m	JZSP-C7M23F-05-E	JZSP-C7M24F-05-E	YAI-CSM32-05-P-E	
		10 m	JZSP-C7M23F-10-E	JZSP-C7M24F-10-E	YAI-CSM32-10-P-E	
		15 m	JZSP-C7M23F-15-E	JZSP-C7M24F-15-E	YAI-CSM32-15-P-E	
		20 m	JZSP-C7M23F-20-E	JZSP-C7M24F-20-E	YAI-CSM32-20-P-E	
		30 m	JZSP-C7M23F-30-E	JZSP-C7M24F-30-E	YAI-CSM32-30-P-E	
		40 m	JZSP-C7M23F-40-E	JZSP-C7M24F-40-E	YAI-CSM32-40-P-E	
		50 m	JZSP-C7M23F-50-E	JZSP-C7M24F-50-E	YAI-CSM32-50-P-E	
SGM7J-08 750 W (200V)		3 m	JZSP-C7M33F-03-E	JZSP-C7M34F-03-E	YAI-CSM33-03-P-E	
		5 m	JZSP-C7M33F-05-E	JZSP-C7M34F-05-E	YAI-CSM33-05-P-E	
		10 m	JZSP-C7M33F-10-E	JZSP-C7M34F-10-E	YAI-CSM33-10-P-E	
		15 m	JZSP-C7M33F-15-E	JZSP-C7M34F-15-E	YAI-CSM33-15-P-E	
		20 m	JZSP-C7M33F-20-E	JZSP-C7M34F-20-E	YAI-CSM33-20-P-E	
		30 m	JZSP-C7M33F-30-E	JZSP-C7M34F-30-E	YAI-CSM33-30-P-E	
		40 m	JZSP-C7M33F-40-E	JZSP-C7M34F-40-E	YAI-CSM33-40-P-E	
		50 m	JZSP-C7M33F-50-E	JZSP-C7M34F-50-E	YAI-CSM33-50-P-E	
SGM7J-A5 to -C2 50 W to 150 W (200V)	Power cable for Servo Motors with Holding Brakes Cable installed away from load	3 m	JZSP-C7M13G-03-E	JZSP-C7M14G-03-E	N/A	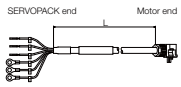
		5 m	JZSP-C7M13G-05-E	JZSP-C7M14G-05-E		
		10 m	JZSP-C7M13G-10-E	JZSP-C7M14G-10-E		
		15 m	JZSP-C7M13G-15-E	JZSP-C7M14G-15-E		
		20 m	JZSP-C7M13G-20-E	JZSP-C7M14G-20-E		
		30 m	JZSP-C7M13G-30-E	JZSP-C7M14G-30-E		
		40 m	JZSP-C7M13G-40-E	JZSP-C7M14G-40-E		
		50 m	JZSP-C7M13G-50-E	JZSP-C7M14G-50-E		
SGM7J-02 to -06 200 W to 600 W (200V)		3 m	JZSP-C7M23G-03-E	JZSP-C7M24G-03-E		
		5 m	JZSP-C7M23G-05-E	JZSP-C7M24G-05-E		
		10 m	JZSP-C7M23G-10-E	JZSP-C7M24G-10-E		
		15 m	JZSP-C7M23G-15-E	JZSP-C7M24G-15-E		
		20 m	JZSP-C7M23G-20-E	JZSP-C7M24G-20-E		
		30 m	JZSP-C7M23G-30-E	JZSP-C7M24G-30-E		
		40 m	JZSP-C7M23G-40-E	JZSP-C7M24G-40-E		
		50 m	JZSP-C7M23G-50-E	JZSP-C7M24G-50-E		
SGM7J-08 750 W (200V)		3 m	JZSP-C7M33G-03-E	JZSP-C7M34G-03-E		
		5 m	JZSP-C7M33G-05-E	JZSP-C7M34G-05-E		
		10 m	JZSP-C7M33G-10-E	JZSP-C7M34G-10-E		
		15 m	JZSP-C7M33G-15-E	JZSP-C7M34G-15-E		
		20 m	JZSP-C7M33G-20-E	JZSP-C7M34G-20-E		
		30 m	JZSP-C7M33G-30-E	JZSP-C7M34G-30-E		
		40 m	JZSP-C7M33G-40-E	JZSP-C7M34G-40-E		
		50 m	JZSP-C7M33G-50-E	JZSP-C7M34G-50-E		

* Use Flexible Cables for moving parts of machines, such as robots.

Servo Motor Main Circuit Cables (400 V Models)

Servo Motor Model	Name	Length (L)	Order Number			Appearance
			Standard Cable	Flexible Cable*	Flexible/Shielded	
SGM7J-02 to -08 200W to 750 W (400V)	Power Cable without Brake. Cable installed toward load	3 m	N/A	N/A	JZSP-C7M143-03-E-G6	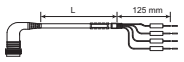
		5 m	N/A	N/A	JZSP-C7M143-05-E-G6	
		10 m	N/A	N/A	JZSP-C7M143-10-E-G6	
		15 m	N/A	N/A	JZSP-C7M143-15-E-G6	
		20 m	N/A	N/A	JZSP-C7M143-20-E-G6	
SGM7J-15 1.5 kW (400V)		3 m	N/A	N/A	JZSP-C7M144-03-E-G6	
		5 m	N/A	N/A	JZSP-C7M144-05-E-G6	
		10 m	N/A	N/A	JZSP-C7M144-10-E-G6	
		15 m	N/A	N/A	JZSP-C7M144-15-E-G6	
		20 m	N/A	N/A	JZSP-C7M144-20-E-G6	
SGM7J-02 to -08 200W to 750 W (400V)	Power Cable with Brake. Cable installed toward load	3 m	N/A	N/A	JZSP-C7M343-03-E-G6	
		5 m	N/A	N/A	JZSP-C7M343-05-E-G6	
		10 m	N/A	N/A	JZSP-C7M343-10-E-G6	
		15 m	N/A	N/A	JZSP-C7M343-15-E-G6	
		20 m	N/A	N/A	JZSP-C7M343-20-E-G6	
SGM7J-15 1.5 kW (400V)		3 m	N/A	N/A	JZSP-C7M344-03-E-G6	
		5 m	N/A	N/A	JZSP-C7M344-05-E-G6	
		10 m	N/A	N/A	JZSP-C7M344-10-E-G6	
		15 m	N/A	N/A	JZSP-C7M344-15-E-G6	
		20 m	N/A	N/A	JZSP-C7M344-20-E-G6	

* Use Flexible Cables for moving parts of machines, such as robots.

Encoder Cables of 20 m or Less (200V Models)

Servo Motor Model	Name	Length (L)	Order Number		Appearance
			Standard Cable	Flexible Cable*1	
SGM7J-A5 to -08 50 W to 750 W	For incremental encoder Cable installed toward load	3 m	JZSP-C7PI0D-03-E	JZSP-C7PI2D-03-E	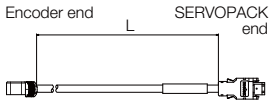
		5 m	JZSP-C7PI0D-05-E	JZSP-C7PI2D-05-E	
		10 m	JZSP-C7PI0D-10-E	JZSP-C7PI2D-10-E	
		15 m	JZSP-C7PI0D-15-E	JZSP-C7PI2D-15-E	
		20 m	JZSP-C7PI0D-20-E	JZSP-C7PI2D-20-E	
	For incremental encoder Cable installed away from load	3 m	JZSP-C7PI0E-03-E	JZSP-C7PI2E-03-E	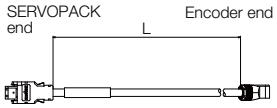
		5 m	JZSP-C7PI0E-05-E	JZSP-C7PI2E-05-E	
		10 m	JZSP-C7PI0E-10-E	JZSP-C7PI2E-10-E	
		15 m	JZSP-C7PI0E-15-E	JZSP-C7PI2E-15-E	
		20 m	JZSP-C7PI0E-20-E	JZSP-C7PI2E-20-E	
	For absolute encoder: With Battery Case*2 Cable installed toward load	3 m	JZSP-C7PA0D-03-E	JZSP-C7PA2D-03-E	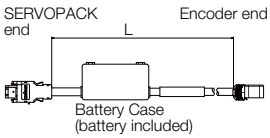
		5 m	JZSP-C7PA0D-05-E	JZSP-C7PA2D-05-E	
		10 m	JZSP-C7PA0D-10-E	JZSP-C7PA2D-10-E	
		15 m	JZSP-C7PA0D-15-E	JZSP-C7PA2D-15-E	
		20 m	JZSP-C7PA0D-20-E	JZSP-C7PA2D-20-E	
	For absolute encoder: With Battery Case*2 Cable installed away from load	3 m	JZSP-C7PA0E-03-E	JZSP-C7PA2E-03-E	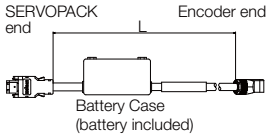
		5 m	JZSP-C7PA0E-05-E	JZSP-C7PA2E-05-E	
		10 m	JZSP-C7PA0E-10-E	JZSP-C7PA2E-10-E	
		15 m	JZSP-C7PA0E-15-E	JZSP-C7PA2E-15-E	
		20 m	JZSP-C7PA0E-20-E	JZSP-C7PA2E-20-E	

*1. Use Flexible Cables for moving parts of machines, such as robots.

*2. If a battery is connected to host controller, the Battery Case is not required. If so, use a cable for incremental encoders.

Encoder Cables of 20 m or Less (400V Models)

Servo Motor Model	Name	Length (L)	Order Number		Appearance
			For Absolute encoder	For Incremental encoder	
SGM7J-02 to -15 200 W to 1.5 kW	Flexible cable with straight connector (M12)	3 m	JZSP-C7PA2M-03-E	JZSP-C7PI2M-03-E-G6	
		5 m	JZSP-C7PA2M-05-E	JZSP-C7PI2M-03-E-G6	
		10 m	JZSP-C7PA2M-10-E	JZSP-C7PI2M-03-E-G6	
		15 m	JZSP-C7PA2M-15-E	JZSP-C7PI2M-03-E-G6	
		20 m	JZSP-C7PA2M-20-E	JZSP-C7PI2M-03-E-G6	
SGM7J-02 to -15 200 W to 1.5 kW	Flexible cable with right angle connector (M12)	3 m	JZSP-C7PA2N-03-E-G6	JZSP-C7PI2N-03-E-G6	
		5 m	JZSP-C7PA2N-05-E-G6	JZSP-C7PI2N-05-E-G6	
		10 m	JZSP-C7PA2N-10-E-G6	JZSP-C7PI2N-10-E-G6	
		15 m	JZSP-C7PA2N-15-E-G6	JZSP-C7PI2N-15-E-G6	
		20 m	JZSP-C7PA2N-20-E-G6	JZSP-C7PI2N-20-E-G6	

Relay Encoder Cable of 30 m to 50 m

Servo Motor Model	Name	Length (L)	Order Number	Appearance
SGM7J-A5 to -08 50 W to 750 W	Encoder-end Cable (for incremental or absolute encoder) Cable installed toward load	0.3 m	JZSP-C7PRCD-E	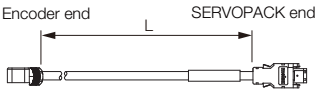
	Encoder-end Cable (for incremental or absolute encoder) Cable installed away from load	0.3 m	JZSP-C7PRCE-E	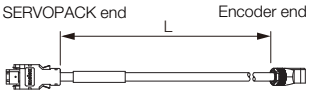
	Cables with Connectors on Both Ends (for incremental or absolute encoder)	30 m	JZSP-UCMP00-30-E	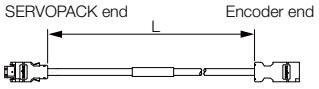
		40 m	JZSP-UCMP00-40-E	
		50 m	JZSP-UCMP00-50-E	
	Cable with a Battery Case (Required when an absolute encoder is used.*)	0.3 m	JZSP-CSP12-E	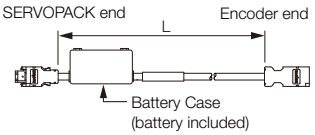

* This Cable is not required if a battery is connected to the host controller.

Connector Specifications (400V)

◆ SGM7J-02D to -15D

Encoder Connector Specifications

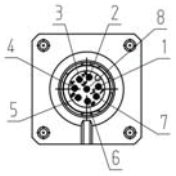

Receptacle
Size: M12
Part number: 1419959
Model:
SACC-MSQ-M12MS-25-3,2 SCO
Manufacturer: Phoenix Contact

1	PG 5V
2	PG 0V
3	FG
4	BAT (+)
5	BAT (-)
6	Data (+)
7	Data (-)
8	Empty
Housing	Shield

◆ SGM7J-02D to -08D

Servo Motor Connector Specifications

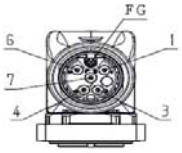

Receptacle
Size: M17
Part number: 1620448
Model: ST-5EP1N8AA500S
Manufacturer: Phoenix Contact

1	(Brake)
3	U
4	V
5	Empty
6	(Brake)
7	W
FG	FG
Housing	Shield

◆ SGM7J-15D

Servo Motor Connector Specifications

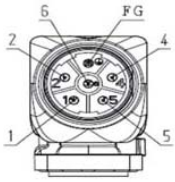

Receptacle
Size: M23
Part number: 1617905
Model: ST-5EP1N8AAD00S
Manufacturer: Phoenix Contact

1	V
2	(Brake)
4	(Brake)
5	U
6	W
FG	FG
Housing	Shield

Servo Motor Connector Rotational Angle

◆ SGM7-02D to -15D

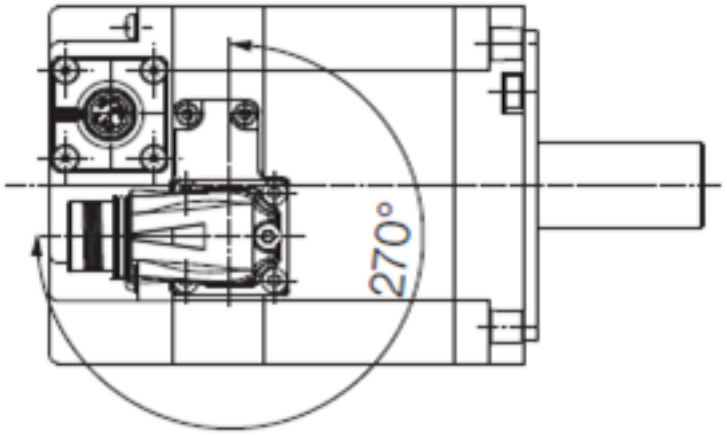

Allowable number of rotations: 10

SGM7A Servo Motors (without Gear Box)

Model Designations

SGM7A - 01 A 7 D 6 1

Σ-7 Series Servo Motors: SGM7A	1st+2nd digits	3rd digit	4th digit	5th digit	6th digit	7th digit

1st+2nd digits Rated Output

Code	Specification
A5	50 W
01	100 W
C2	150 W
02	200 W
04	400 W
06	600 W
08	750 W
10	1.0 kW
15	1.5 kW
20	2.0 kW
25	2.5 kW
30	3.0 kW
40	4.0 kW
50	5.0 kW
70	7.0 kW

3rd digit Power Supply Voltage

Code	Specification
A	200 VAC
D	400 VAC

4th digit Serial Encoder

Code	Specification
7	24-bit absolute
F	24-bit incremental

5th digit Design Revision Order

D: Global design revision (200 V)
F: Global design revision (400 V)

■ Non Stock Items

6th digit Shaft End

Code	Specification
2	Straight without key
6	Straight with key and tap
B*	With two flat seats

* Code B is not supported for models with a rated output of 1.5 kW or higher.

7th digit Options

Code	Specification
1	Without options
C	With holding brake (24 VDC)
E	With oil seal and holding brake (24 VDC)
S	With oil seal
F	With dust seal
H	With dust seal and holding brake (24 VDC)

Note: SGM7A-70A Servo Motors with holding brakes are not available.

SGM7A Gear Motors

The SGM7A gear motor product family pairs SGM7A servo motors with high precision, low backlash inline planetary gear heads resulting in a portfolio of rotary actuators fit for a wide range of applications. The family of gear motors has been thoroughly tested and adheres to the high levels of quality and performance expected from Yaskawa.

The high precision gear heads offer a variety of application advantages:

- ① **Quiet operation** – helical cut gears contribute toward reduced vibration and noise
- ② **High precision** – a standard backlash of 5 arc-min make this gear head ideal for the most accurate applications
- ③ **High rigidity and torque capacity** – achieved with a design which incorporates uncaged needle roller bearings
- ④ **Optimized adapter bushing** – minimizes inertia allowing for more output torque to be realized
- ⑤ **No leakage through the seal** – high viscosity, anti-separation grease does not liquefy and does not migrate away from the gears
- **Maintenance-free** – no need to replace the grease for the life of the unit. The reducer can be positioned in any orientation

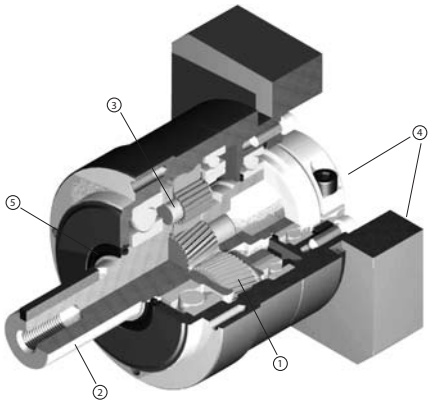

Model Designations

S7A 01 A C - VL 050 - 05

Σ-7 Series Gear Motors: SGM7A	1st+2nd digits	3rd digit	4th digit	5th digit	6th digit	7th digit

1st+2nd digits Rated Output

Code	Specification
01	100 W
02	200 W
04	400 W
08	750 W
10	1.0 kW
15	1.5 kW
20	2.0 kW
25	2.5 kW
30	3.0 kW
40	4.0 kW
50	5.0 kW
70	7.0 kW

3rd digit Power Supply Voltage

Code	Specification
A	200 VAC
D	400 VAC

4th digit Brake Option

Code	Specification
Blank	No brake
C	24 V Brake

5th digit Gear box backlash

Code	Specification
VL	5 arc-min backlash

6th digit Gear head frame size

Code	Specification
050	50 mm
070	70 mm
090	90 mm
120	120 mm
155	155 mm
205	205mm
235	235mm

7th digit Gear Ratio

Code	Specification
03	3:1 Ratio
05	5:1 Ratio
10	10:1 Ratio
25	25:1 Ratio
50	50:1 Ratio

Specifications and Ratings

Specifications (200 V Models)

Voltage		200 V	
Model SGM7A-		A5A to 70A	
Time Rating		Continuous	
Thermal Class		A5A to 10A	UL: B, CE: B
		15A to 70A	UL: F, CE: F
Insulation Resistance		500 VDC, 10 MΩ min.	
Withstand Voltage		1,500 VAC for 1 minute	
Excitation		Permanent magnet	
Mounting		Flange-mounted	
Drive Method		Direct drive	
Rotation Direction		Counterclockwise (CCW) for forward reference when viewed from the load side	
Vibration Class*1		V15	
Environmental Conditions	Surrounding Air Temperature	0°C to 40°C (With derating, usage is possible between 40°C and 60°C.)*4	
	Surrounding Air Humidity	20% to 80% relative humidity (with no condensation)	
	Installation Site	• Must be indoors and free of corrosive and explosive gases. • Must be well-ventilated and free of dust and moisture. • Must facilitate inspection and cleaning. • Must have an altitude of 1,000 m or less. (With derating, usage is possible between 1,000 m and 2,000 m.)*5 • Must be free of strong magnetic fields.	
	Storage Environment	Store the Servo Motor in the following environment if you store it with the power cable disconnected. Storage Temperature: -20°C to 60°C (with no freezing) Storage Humidity: 20% to 80% relative humidity (with no condensation)	
Shock Resistance*2	Impact Acceleration Rate at Flange	490 m/s^2	
	Number of Impacts	2 times	
Vibration Resistance*3	Vibration Acceleration Rate at Flange	A5A to 50A	49 m/s^2 (Models 15A to 50A: 24.5 m/s^2 front to back)
		70A	14.7 m/s
Applicable SERVOPACKs		Refer to the following section. ☞ **Σ-7 Series Combination (page M-8)**	

*1. A vibration class of V15 indicates a vibration amplitude of 15 μm maximum on the Servo Motor without a load at the rated motor speed.

*2. The shock resistance for shock in the vertical direction when the Servo Motor is mounted with the shaft in a horizontal position is given in the above table.

*3. The vertical, side-to-side, and front-to-back vibration resistance for vibration in three directions when the Servo Motor is mounted with the shaft in a horizontal position is given in the above table. The strength of the vibration that the Servo Motor can withstand depends on the application. Always check the vibration acceleration rate that is applied to the Servo Motor with the actual equipment.

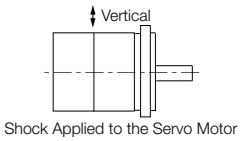

Shock Applied to the Servo Motor

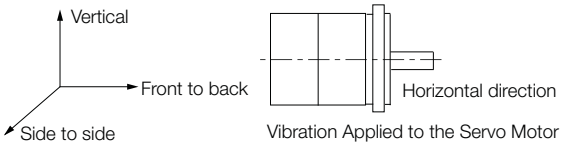

Vibration Applied to the Servo Motor

*4. If the surrounding air temperature will exceed 40°C, refer to the following section.
☞ **Applications Where the Surrounding Air Temperature of the Servo Motor Exceeds 40°C (page 69)**

*5. If the altitude will exceed 1,000 m, refer to the following section.
☞ **Applications Where the Altitude of the Servo Motor Exceeds 1,000 m (page 70)**

Ratings of Servo Motors (200 V Models -A5A to -10A)

Voltage			200 V							
Model SGM7A-			A5A	01A	C2A	02A	04A	06A	08A	10A
Rated Output[*1]		W	50	100	150	200	400	600	750	1000
Rated Torque[*1, *2]		N•m	0.159	0.318	0.477	0.637	1.27	1.91	2.39	3.18
Instantaneous Maximum Torque[*1]		N•m	0.557	1.11	1.67	2.23	4.46	6.69	8.36	11.1
Rated Current[*1]		Arms	0.57	0.89	1.5	1.5	2.4	4.5	4.4	6.4
Instantaneous Maximum Current[*1]		Arms	2.1	3.2	5.6	5.9	9.3	16.9	16.8	23.2
Rated Motor Speed[*1]		min^{-1}	3000							
Maximum Motor Speed[*1]		min^{-1}	6000							
Torque Constant		N•m/Arms	0.304	0.384	0.332	0.458	0.576	0.456	0.584	0.541
Motor Moment of Inertia		$\times 10^{-4}$ $kg•m^2$	0.0217 (0.0297)	0.0337 (0.0417)	0.0458 (0.0538)	0.139 (0.209)	0.216 (0.286)	0.315 (0.385)	0.775 (0.955)	0.971 (1.15)
Rated Power Rate[*1]		kW/s	11.7 (8.51)	30.0 (24.2)	49.7 (42.2)	29.2 (19.4)	74.7 (56.3)	115 (94.7)	73.7 (59.8)	104 (87.9)
Rated Angular Acceleration Rate[*1]		rad/s^2	73200 (53500)	94300 (76200)	104000 (88600)	45800 (30400)	58700 (44400)	60600 (49600)	30800 (25000)	32700 (27600)
Derating Rate for Servo Motor with Oil Seal		%	80	90			95			
Heat Sink Size (Aluminum)		mm	200 × 200 × 6		250 × 250 × 6			300 × 300 × 12[*7]	250 × 250 × 6	300 × 300 × 12
Protective Structure[*3]			Totally enclosed, self-cooled, IP67							
Holding Brake Specifications[*4]	Rated Voltage	V	24 VDC±10%							
	Capacity	W	5.5			6		6.5		
	Holding Torque	N•m	0.159	0.318	0.477	0.637	1.27	1.91	2.39	3.18
	Coil Resistance	Ω (at 20°C)	104.8±10%			96±10%		88.6±10%		
	Rated Current	A (at 20°C)	0.23			0.25		0.27		
	Time Required to Release Brake	ms	60					80		
	Time Required to Brake	ms	100							
Allowable Load Moment of Inertia (Motor Moment of Inertia Ratio)			40 times			30 times	20 times		20 times	
Allowable Shaft Loads[*5]	LF	mm	20			25			35	
	Allowable Radial Load	N	78			245			392	
	Allowable Thrust Load	N	54			74			147	

Note: 1. The values in parentheses are for Servo Motors with Holding Brakes.

2. Refer to the following section for footnotes *1 to *5 and *7.

☞ **Notes for Ratings of Servo Motor (page 58)**

Torque-Motor Speed Characteristics (200 V Models -A5A to -10A)

A : Continuous duty zone
B : Intermittent duty zone

——— (solid lines): With three-phase 200-V or single-phase 230-V input
- - - - - - - (dotted lines): With single-phase 200-V input
— – — (dashed-dotted lines): With single-phase 100-V input

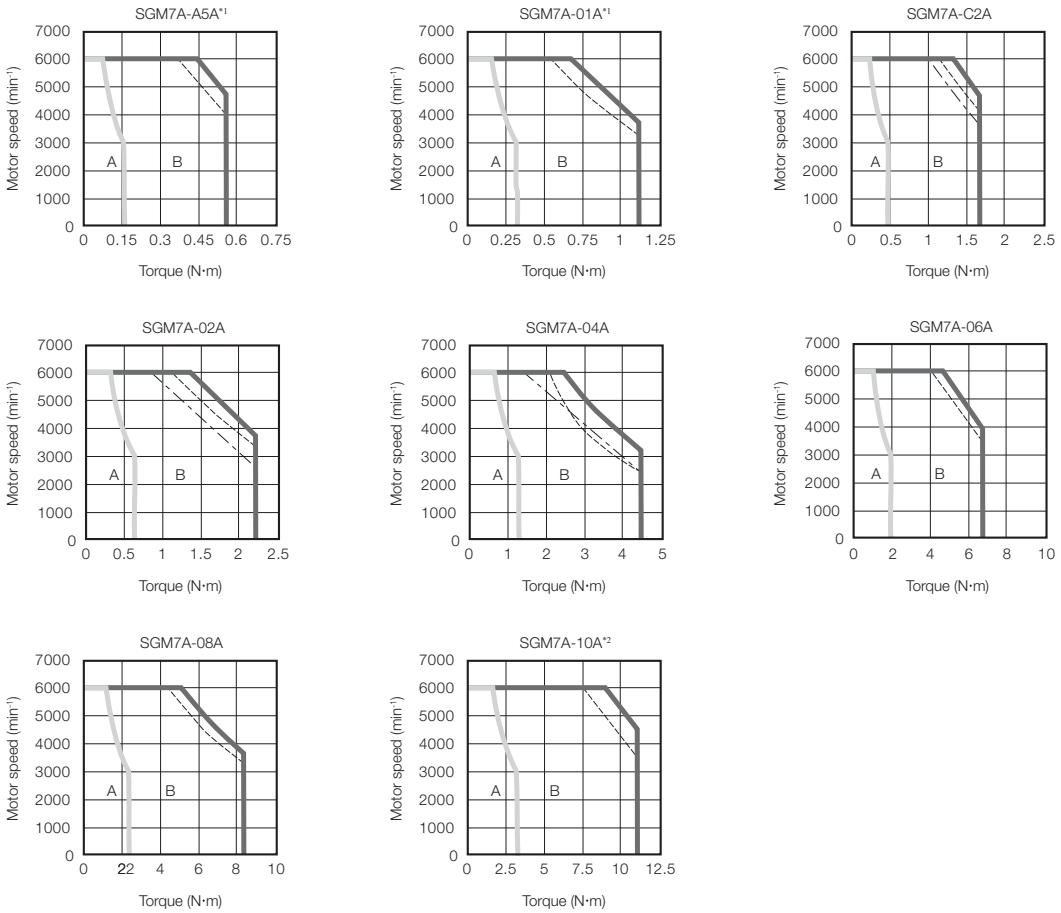

*1. The characteristics are the same for single-phase 200 V and single-phase 100 V input.

*2. A single-phase power input can be used in combination with the SGD7S-120A A008.

Note: 1. These values are for operation in combination with a SERVOPACK when the temperature of the armature winding is 100°C. These are typical values.

2. The characteristics in the intermittent duty zone depend on the power supply voltage.

3. If the effective torque is within the allowable range for the rated torque, the Servo Motor can be used within the intermittent duty zone.

4. If you use a Servo Motor Main Circuit Cable that exceeds 20 m, the intermittent duty zone in the torque-motor speed characteristics will become smaller because the voltage drop increases.

Servo Motor Ratings (200 V Models -15A to -70A)

Voltage			200 V						
Model SGM7A-			15A	20A	25A	30A	40A	50A	70A
Rated Output*6		kW	1.5	2.0	2.5	3.0	4.0	5.0	7.0
Rated Torque*2, *6		N•m	4.90	6.36	7.96	9.80	12.6	15.8	22.3
Instantaneous Maximum Torque*6		N•m	14.7	19.1	23.9	29.4	37.8	47.6	54.0
Rated Current*6		Arms	9.3	12.1	15.6	17.9	25.4	27.6	38.3
Instantaneous Maximum Current*6		Arms	28	42	51	56	77	84	105
Rated Motor Speed*6		min^{-1}	3000						
Maximum Motor Speed*6		min^{-1}	6000*8						
Torque Constant		N•m/Arms	0.590	0.561	0.538	0.582	0.519	0.604	0.604
Motor Moment of Inertia		$\times 10^{-4}$ kg•m^2	2.00 (2.25)	2.47 (2.72)	3.19 (3.44)	7.00 (9.20)	9.60 (11.8)	12.3 (14.5)	12.3
Rated Power Rate*6		kW/s	120 (106)	164 (148)	199 (184)	137 (104)	165 (134)	203 (172)	404
Rated Angular Acceleration Rate*6		rad/s^2	24500 (21700)	25700 (23300)	24900 (23100)	14000 (10600)	13100 (10600)	12800 (10800)	18100
Heat Sink Size (Aluminum)		mm	300 × 300 × 12			400 × 400 × 20			
Protective Structure*3			Totally enclosed, self-cooled, IP67						Totally enclosed, separately cooled (with fan), IP22
Holding Brake Specifications*4	Rated Voltage	V	24 VDC $^{+10\%}_{0}$						–
	Capacity	W	12			10			
	Holding Torque	N•m	7.84		10	20			
	Coil Resistance	Ω (at 20°C)	48			59			
	Rated Current	A (at 20°C)	0.5			0.41			
	Time Required to Release Brake	ms	170			100			
	Time Required to Brake	ms	80						
Allowable Load Moment of Inertia (Motor Moment of Inertia Ratio)			10 times			5 times			
Allowable Shaft Loads*5	LF	mm	45			63			
	Allowable Radial Load	N	686			980	1176		
	Allowable Thrust Load	N	196			392			

Note: 1. The values in parentheses are for Servo Motors with Holding Brakes.

2. Refer to the following section for footnotes *2 to *6.

☞ **Notes for Ratings of Servo Motor (page 58)**

Torque-Motor Speed Characteristics (200 V Models -15A to -70A)

A : Continuous duty zone
B : Intermittent duty zone

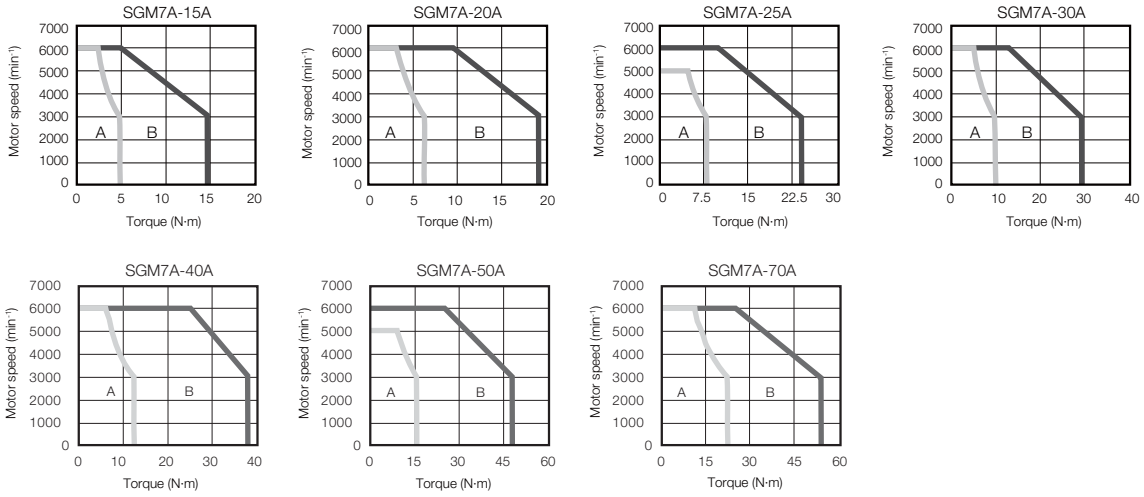

Note: 1. These values are for operation in combination with a SERVOPACK when the temperature of the armature winding is 20°C. These are typical values.
2. The characteristics in the intermittent duty zone depend on the power supply voltage.
3. If the effective torque is within the allowable range for the rated torque, the Servo Motor can be used within the intermittent duty zone.
4. If you use a Servo Motor Main Circuit Cable that exceeds 20 m, the intermittent duty zone in the torque-motor speed characteristics will become smaller because the voltage drop increases.

■ Notes for Ratings of Servo Motor

*1. These values are for operation in combination with a SERVOPACK when the temperature of the armature winding is 100°C. The values for other items are at 20°C. These are typical values.
*2. The rated torques are the continuous allowable torque values at a surrounding air temperature of 40°C with an aluminum heat sink of the dimensions given in the table.
*3. This does not apply to the shaft opening. Protective structure specifications apply only when the special cable is used.
*4. Observe the following precautions if you use a Servo Motor with a Holding Brake.
- The holding brake cannot be used to stop the Servo Motor.
- The time required to release the brake and the time required to brake depend on which discharge circuit is used. Confirm that the operation delay time is appropriate for the actual equipment.
- The 24-VDC power supply is not provided by Yaskawa.

*5. The allowable shaft loads are illustrated in the following figure. Design the mechanical system so that the thrust and radial loads applied to the Servo Motor shaft end during operation do not exceed the values given in the table.

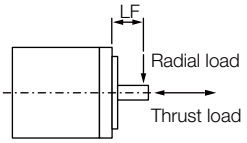

*6. These values are for operation in combination with a SERVOPACK when the temperature of the armature winding is 20°C. These are typical values.
*7. If the heat sink is 250 mm × 250 mm × 6 mm, the rated output is 550 W and the rated torque is 1.75 N·m.
Refer to the following section for details.
☞ **Servo Motor Heat Dissipation Conditions (page 68)**
*8. For the SGM7A-25A or SGM7A-50A, the maximum motor speed for the continuous duty zone is 5,000 min^{-1}.
Use the Servo Motor within the continuous duty zone for the average motor speed and effective torque.

Specifications (400 V Models)

Voltage		400 V										
Model SGM7A-		02D	04D	08D	10D	15D	20D	25F	30D	40D	50D	70D
Time Rating		Continuous										
Thermal Class		B				F						
Insulation Resistance		500 VDC, 10 MΩ min.										
Withstand Voltage		1,800 VAC for 1 minute										
Excitation		Permanent magnet										
Mounting		Flange-mounted										
Drive Method		Direct drive										
Rotation Direction		Counterclockwise (CCW) for forward reference when viewed from the load side										
Vibration Class[*1]		V15										
Environmental Conditions	Surrounding Air Temperature	0°C to 40°C (With derating, usage is possible between 40°C and 60°C.)[*4]										
	Surrounding Air Humidity	20% to 80% relative humidity (with no condensation)										
	Installation Site	• Must be indoors and free of corrosive and explosive gases. • Must be well-ventilated and free of dust and moisture. • Must facilitate inspection and cleaning. • Must have an altitude of 1,000 m or less. (With derating, usage is possible between 1,000 m and 2,000 m.)[*5] • Must be free of strong magnetic fields.										
	Storage Environment	Store the Servo Motor in the following environment if you store it with the power cable disconnected. Storage Temperature: -20°C to 60°C (with no freezing) Storage Humidity: 20% to 80% relative humidity (with no condensation)										
Shock Resistance[*2]	Impact Acceleration Rate at Flange	490 m/s^2										
	Number of Impacts	2 times										
Vibration Resistance[*3]	Vibration Acceleration Rate at Flange	49 m/s^2 (Models 15A to 50A: 24.5 m/s^2 front to back)										
Applicable SERVOPACKS	SGD7S-	1R9D		3R5D		5R4D		8R4D	120D		170D	260D
	SGD7W-	2R6D[*6]	2R6D[*6] or 5R4D[*6]			5R4D		N/A				

*1. A vibration class of V15 indicates a vibration amplitude of 15 μm maximum on the Servo Motor without a load at the rated motor speed.

*2. The shock resistance for shock in the vertical direction when the Servo Motor is mounted with the shaft in a horizontal position is given in the above table.

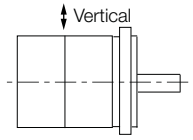

Shock Applied to the Servo Motor

*3. The vertical, side-to-side, and front-to-back vibration resistance for vibration in three directions when the Servo Motor is mounted with the shaft in a horizontal position is given in the above table. The strength of the vibration that the Servo Motor can withstand depends on the application. Always check the vibration acceleration rate that is applied to the Servo Motor with the actual equipment.

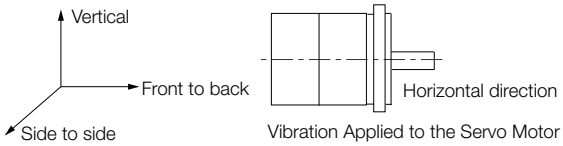

Vibration Applied to the Servo Motor

*4. If the surrounding air temperature will exceed 40°C, refer to the following section.
☞ **Applications Where the Surrounding Air Temperature of the Servo Motor Exceeds 40°C (page 69)**

*5. If the altitude will exceed 1,000 m, refer to the following section.
☞ **Applications Where the Altitude of the Servo Motor Exceeds 1,000 m (page 70)**

*6. If you use this combination, performance may not be as good, e.g., the control gain may not increase, in comparison with using a Sigma-7 Single Axis SERVOPACK.

Ratings of Servo Motors (400 V Models -02D to -15D)

Voltage			400 V				
Model SGM7A-			02D	04D	08D	10D	15D
Rated Output[*1]		W	200	400	750	1000	1500
Rated Torque[*1, *2]		N•m	0.637	1.27	2.39	3.18	4.90
Instantaneous Maximum Torque[*1]		N•m	2.23	4.46	8.36	11.1	14.7
Rated Current[*1]		Arms	1.2	1.2	2.2	3.2	4.7
Instantaneous Maximum Current[*1]		Arms	5.1	4.9	8.5	12	14
Rated Motor Speed[*1]		min^{-1}	3000				
Maximum Motor Speed[*1]		min^{-1}	6000[*6]				
Torque Constant		N•m/Arms	0.556	1.11	1.16	1.07	1.23
Motor Moment of Inertia		$\times 10^{-4}$ kg•m^2	0.139 (0.209)	0.216 (0.286)	0.775 (0.955)	0.971 (1.15)	2.00 (2.25)
Rated Power Rate[*1]		kW/s	29.2 (19.4)	74.7 (56.3)	73.7 (59.8)	104 (87.9)	120 (106)
Rated Angular Acceleration Rate[*1]		rad/s^2	45,800 (30,400)	58,700 (44,400)	30,800 (25,000)	32,700 (27,600)	24,500 (21,700)
Derating Rate for Servo Motor with Oil Seal		%	-			95	100
Heat Sink Size (Aluminum)		mm	250 × 250 × 6			300 × 300 × 12	
Protective Structure[*3]			Totally enclosed, self-cooled, IP67				
Holding Brake Specifications[*4]	Rated Voltage	V	24 VDC±10%				
	Capacity	W	6.0		6.5		12
	Holding Torque	N•m	0.637	1.27	2.39	3.18	7.84
	Coil Resistance	Ω (at 20°C)	96±10%		88.6±10%		48±10%
	Rated Current	A (at 20°C)	0.25		0.27		0.5
	Time Required to Release Brake	ms	60		80		170
	Time Required to Brake	ms	100				80
Allowable Load Moment of Inertia (Motor Moment of Inertia Ratio)	Standard		30 times	20 times		10 times	
	With external regenerative resistor and dynamic brake resistor connected		30 times	20 times	30 times		20 times
Allowable Shaft Loads[*5]	LF	mm	25		35		45
	Allowable Radial Load	N	245		392		686
	Allowable Thrust Load	N	74		147		196

Note: The values in parentheses are for Servo Motors with Holding Brakes.

*1. For the SGM7A-02D to SGM7A-10D, these values are for operation in combination with a SERVOPACK when the temperature of the armature winding is 100°C. The values for other items are at 20°C. For the SGM7A-15D to SGM7A-30D, these values are for operation in combination with a SERVOPACK when the temperature of the armature winding is 20°C. These are typical values.

*2. The rated torques are the continuous allowable torque values at a surrounding air temperature of 40°C with an aluminum heat sink of the dimensions given in the table.

*3. This does not apply to the shaft opening. Protective structure specifications apply only when the special cable is used.

*4. Observe the following precautions if you use a Servomotor with a Holding Brake.
- The holding brake cannot be used to stop the Servomotor.
- The time required to release the brake and the time required to brake depend on which discharge circuit is used. Confirm that the operation delay time is appropriate for the actual equipment.
- The 24-VDC power supply is not provided by YASKAWA.

*5. The allowable shaft loads are illustrated in the following figure. Design the mechanical system so that the thrust and radial loads applied to the Servomotor shaft end during operation do not exceed the values given in the table

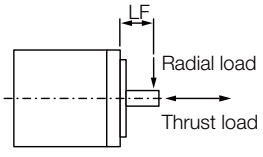

*6. .For the SGM7A-25D, the maximum motor speed for the continuous duty zone is 5,000 min-1. Use the Servomotor within the continuous duty zone for the average motor speed and effective torque.

Ratings of Servo Motors (400 V Models -20D to -70D)

Voltage			400 V					
Model SGM7A-			20D	25D	30D	40D	50D	70D
Rated Output*1		W	2000	2500	3000	4000	5000	7000
Rated Torque*1, *2		N•m	6.36	7.96	9.80	12.6	15.8	22.3
Instantaneous Maximum Torque*1		N•m	19.1	23.9	29.4	37.8	47.6	54.0
Rated Current*1		Arms	6.1	7.4	8.9	12.5	13.8	19.2
Instantaneous Maximum Current*1		Arms	20	25	28	38	42	52.5
Rated Motor Speed*1		min^{-1}	3000					
Maximum Motor Speed*1		min^{-1}	6000*6					
Torque Constant		N•m/Arms	1.18	1.15	1.16	1.06	1.21	1.21
Motor Moment of Inertia		$\times 10^{-4}$ kg•m^2	2.47 (2.72)	3.19 (3.44)	7.00 (9.20)	9.60 (11.8)	12.3 (14.5)	12.3
Rated Power Rate*1		kW/s	164 (148)	199 (184)	137 (104)	165 (134)	203 (172)	404
Rated Angular Acceleration Rate*1		rad/s^2	25,700 (23,300)	24,900 (23,100)	14,000 (10,600)	13,100 (10,600)	12,800 (10,800)	18100
Derating Rate for Servo Motor with Oil Seal		%	100					
Heat Sink Size (Aluminum)		mm	300 × 300 × 12		400 × 400 × 20			
Protective Structure*3			Totally enclosed, self-cooled, IP67					Totally enclosed, separately cooled, (with fan), IP22 cooled (w/fan)
Holding Brake Specifications*4	Rated Voltage	V	24 VDC±10%					-
	Capacity	W	12		10			-
	Holding Torque	N•m	7.84	10	20			-
	Coil Resistance	Ω (at 20°C)	48±10%		59			-
	Rated Current	A (at 20°C)	0.5		0.41			-
	Time Required to Release Brake	ms	170		100			-
	Time Required to Brake	ms	80					-
Allowable Load Moment of Inertia (Motor Moment of Inertia Ratio)	Standard		10 times		5 times			15 times
	With external regenerative resistor and dynamic brake resistor connected		20 times		15 times			
Allowable Shaft Loads*5	LF	mm	45		63			
	Allowable Radial Load	N	686		890	1176		
	Allowable Thrust Load	N	196		392			

Note: The values in parentheses are for Servo Motors with Holding Brakes.

*1. For the SGM7A-02D to SGM7A-10D, these values are for operation in combination with a SERVOPACK when the temperature of the armature winding is 100°C. The values for other items are at 20°C. For the SGM7A-15D to SGM7A-30D, these values are for operation in combination with a SERVOPACK when the temperature of the armature winding is 20°C. These are typical values.

*2. The rated torques are the continuous allowable torque values at a surrounding air temperature of 40°C with an aluminum heat sink of the dimensions given in the table.

*3. This does not apply to the shaft opening. Protective structure specifications apply only when the special cable is used.

*4. Observe the following precautions if you use a Servomotor with a Holding Brake.
- The holding brake cannot be used to stop the Servomotor.
- The time required to release the brake and the time required to brake depend on which discharge circuit is used. Confirm that the operation delay time is appropriate for the actual equipment.
- The 24-VDC power supply is not provided by YASKAWA.

*5. The allowable shaft loads are illustrated in the following figure. Design the mechanical system so that the thrust and radial loads applied to the Servomotor shaft end during operation do not exceed the values given in the table

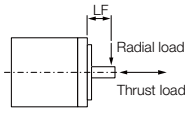

*6. .For the SGM7A-25D, the maximum motor speed for the continuous duty zone is 5,000 min-1. Use the Servomotor within the continuous duty zone for the average motor speed and effective torque.

Torque-Motor Speed Characteristics (400V Models)

A : Continuous duty zone
B : Intermittent duty zone

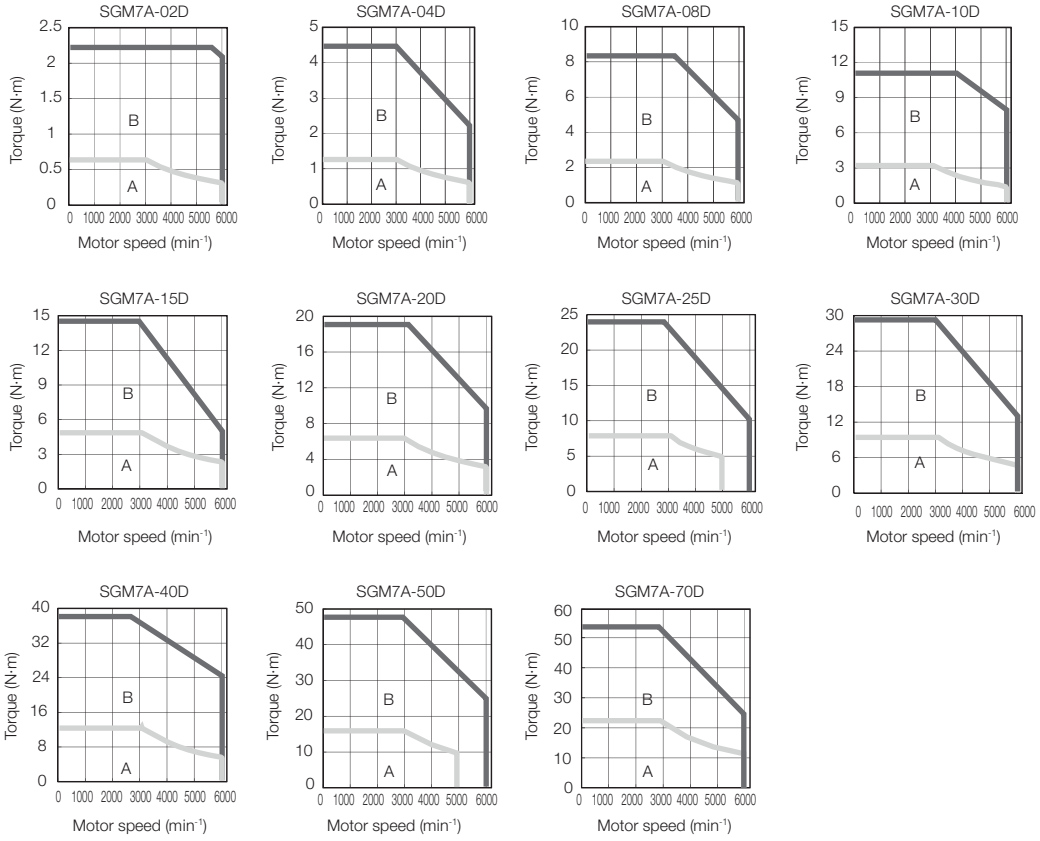

Note: 1. For the SGM7A-02D to SGM7A-10D, these values are for operation in combination with a SERVOPACK when the temperature of the armature winding is 100°C. For the SGM7A-15D to SGM7A-30D, these values are for operation in combination with a SERVOPACK when the temperature of the armature winding is 20°C. These are typical values.

2. The characteristics in the intermittent duty zone depend on the power supply voltage. The intermittent duty zones in the graphs show the characteristics when a three-phase, 400-VAC power supply voltage is used..
3. If the effective torque is within the allowable range for the rated torque, the Servomotor can be used within the intermittent duty zone.
4. If you use a Servomotor Main Circuit Cable that exceeds 20 m, the intermittent duty zone in the torque-motor speed characteristics will become smaller because the voltage drop increases.

Ratings of Gear Motors (200 V Models)

Gear Motor Model Number S7A____	Base Servo Motor Model SGM7A-	Gear Ratio	Gearing Efficiency *1	Rated Speed (RPM)	Max Speed (RPM)	Rated Torque (Nm)*2	Peak Torque (Nm)*2	Motor Inertia ($x10^{-4}$ kg-m^2)	Gearhead Inertia ($x10^{-4}$ kg-m^2)	Allow-able Radial Load (N)	Allow-able Axial Load (N)	Back-lash (arc-min)	Class
01A□ -VL050-03	01A7D6□	3:1	95	1000	2000	0.906	3.16	0.0337 (0.0447)	0.053	710	640	5	IP65
01A□ -VL050-05		5:1		600	1200	1.51	5.27		0.036				
01A□ -VL050-10		10:1		300	600	3.02	10.5		0.030				
01A□ -VL050-25		25:1	90	120	240	7.16	18.0*3		0.034			7	
01A□ -VL070-50		50:1		60	120	14.3	50.0		0.051	1200	1100	5	
02A□ -VL050-03	02A7D6□	3:1	95	1000	2000	1.82	6.36	0.139 (0.209)	0.17	710	640		
02A□ -VL050-05		5:1		600	1200	3.03	10.6		0.15				
02A□ -VL070-10		10:1		300	600	6.05	12.0*3		0.17	1200	1100		
02A□ -VL070-25		25:1	90	120	240	14.3	50.2		0.17				
02A□ -VL070-50		50:1		60	120	28.7	50.0*3		0.16				
04A□ -VL050-03	04A7D6□	3:1	95	1000	2000	3.62	12.7	0.216 (0.286)	0.17	710	640		
04A□ -VL050-05		5:1		600	1200	6.03	18.0*3		0.15				
04A□ -VL070-10		10:1		300	600	12.1	35.0*3		0.17	1200	1100		
04A□ -VL070-25		25:1	90	120	240	28.6	50.0*3		0.17				
04A□ -VL090-50		50:1		60	120	57.2	125*3		0.27	2400	2200		
08A□ -VL070-03	08A7D6□	3:1	95	1000	2000	6.81	23.8	0.775 (0.955)	0.53	1200	1100		
08A□ -VL070-05		5:1		600	1200	11.4	39.7		0.46				
08A□ -VL090-10		10:1		300	600	22.7	79.4		0.70	2400	2200		
08A□ -VL090-25		25:1	90	120	240	53.8	125*3		0.74				
08A□ -VL120-50		50:1		60	120	108	330*3		0.76	4300	3900		
15A□ -VL090-03	15A7D6□	3:1	95	1000	2000	14.0	41.9	2.000 (2.250)	2.9	2400	2200		
15A□ -VL090-05		5:1		600	1200	23.3	69.8		2.6				
15A□ -VL090-10		10:1		300	600	46.6	80*3		2.5				
15A□ -VL120-25		25:1	90	120	240	110	331		2.8	4300	3900		
15A□ -VL120-50		50:1		60	120	180*3	330*3		2.5				
20A□ -VL090-03	20A7D6□	3:1	95	1000	2000	18.1	54.4	2.470 (2.720)	2.9	2400	2200		
20A□ -VL090-05		5:1		600	1200	30.2	90.7		2.6				
20A□ -VL120-10		10:1		300	600	60.4	181		2.6	4300	3900		
20A□ -VL120-25		25:1	90	120	240	143*3	330*3		2.8				
20A□ -VL155-50		50:1		40*3	80*3	286*3	700*3		2.8	9100	8200		
25A□ -VL090-03	25A7D6□	3:1	95	1000	2000	22.7	68.1	3.190 (3.440)	2.9	2400	2200		
25A□ -VL090-05		5:1		600	1200	37.8	114		2.6				
25A□ -VL120-10		10:1		300	600	75.6	227		2.6	4300	3900		
25A□ -VL120-25		25:1	90	120	240	179*3	330*3		2.8				
25A□ -VL155-50		50:1		40*3	80*3	358*3	700*3		2.8	9100	8200		
30A□ -VL090-03	30A7D6□	3:1	95	1000	2000	27.9	83.8	7.000 (9.200)	2.9	2400	2200		
30A□ -VL090-05		5:1		600	1200	46.6	125*3		2.6				
30A□ -VL120-10		10:1		300	600	93.1	225*3		2.6	4300	3900		
30A□ -VL120-25		25:1	90	120	240	180*3	330*3		2.8				
30A□ -VL155-50		50:1		40*3	80*3	360*3	700*3		2.8	9100	8200		
40A□ -VL090-03	40A7D6□	3:1	95	1000	2000	35.9	80*3	9.600 (11.80)	2.9	2400	2200		
40A□ -VL090-05		5:1		600	1200	59.9	125*3		2.6				
40A□ -VL120-10		10:1		300	600	120	225*3		2.6	4300	3900		
40A□ -VL155-25		25:1	90	80*3	160*3	284	700*3		4.1	9100	8200		
40A□ -VL205-50		50:1		30*3	60*3	567	1400*3		3.8	15000	14000		

Gear Motor Model Number S7A____	Base Servo Motor Model SGM7A-	Gear Ratio	Gearing Efficiency *1	Rated Speed (RPM)	Max Speed (RPM)	Rated Torque (Nm)*2	Peak Torque (Nm)*2	Motor Inertia ($x10^{-4}$ $kg\text{-}m^2$)	Gearhead Inertia ($x10^{-4}$ $kg\text{-}m^2$)	Allow-able Radial Load (N)	Allow-able Axial Load (N)	Back-lash (arc-min)	Class
50A□ -VL090-03	50A7D6□	3:1	95	1000	2000	45.0	80*3	12.30 (14.50)	2.9	2400	2200	5	IP65
50A□ -VL090-05		5:1		600	1200	75.1	125*3		2.6				
50A□ -VL155-10		10:1		200*3	400*3	150	452		3.2	9100	8200		
50A□ -VL155-25		25:1	90	80*3	160*3	356	700*3		4.1				
50A□ -VL205-50		50:1		30*3	60*3	711	1400*3		3.8	15000	14000		
70A-VL120-03	70A7D61	3:1	95	1000	2000	63.6	154	12.30	5.1	4300	3900		
70A-VL120-05		5:1		600	1200	106	257		3.1				
70A-VL155-10		10:1		200*3	400*3	212	513		3.2	9100	8200		
70A-VL205-25		25:1	90	60*3	120*3	502	1215		7.9	15000	14000		
70A-VL235-50		50:1	92	30*3	60*3	1026	2484		4.7				

Note: The values in parentheses are for Servo Motors with Holding Brakes (indicated by value of □ in model numbers).

*1. The gear efficiency depends on operating conditions such as the output torque, motor speed, and temperature.

*2. The gear motor output torque is expressed by the following formula: Output Torque = (Servo Motor Output Torque) x (Gearing Ratio) x (Gearing Efficiency). The values in the table are typical values for the rated torque, rated motor speed, and a surrounding air temperature of 25°C. They are reference values only.

*3. The output torque of the gear motor is limited by the mechanical limit of the gear head. Operation above this limit could result in premature failure of the gear motor.


Important

During operation of the gear motor, losses due to inefficiencies of the gearing mechanism are generated. The losses vary as the conditions for gear motor torque and speed change. Temperature rise can vary based on the mechanical inefficiencies and the heat dissipation conditions. For heat dissipation conditions, check the gear and motor temperatures with the actual equipment. If operating temperatures are too high, implement the following measures.

- Decrease the load ratio.
- Change the heat dissipation conditions.
- Use forced-air cooling for the motor with a cooling fan or other means.

Ratings of Gear Motors (400 V Models)

Gear Motor Model Number S7A____	Base Servo Motor Model SGM7A-	Gear Ratio	Gearing Efficiency *1	Rated Speed (RPM)	Max Speed (RPM)	Rated Torque (Nm)*2	Peak Torque (Nm)*2	Motor Inertia ($x10^{-4}$ kg-m^2)	Gearhead Inertia ($x10^{-4}$ kg-m^2)	Allow-able Radial Load (N)	Allow-able Axial Load (N)	Back-lash (arc-min)	Class
02D□ -VL050-03	02D7F6□	3:1	95	1000	2000	1.82	6.36	0.139 (0.209)	0.17	710	640	5	IP65
02D□ -VL050-05		5:1		600	1200	3.03	10.6		0.15				
02D□ -VL070-10		10:1		300	600	6.05	12.0*3		0.17	1200	1100		
02D□ -VL070-25		25:1	90	120	240	14.3	50.2		0.17				
02D□ -VL070-50		50:1		60	120	28.7	50.0*3		0.16				
04D□ -VL050-03	04D7F6□	3:1	95	1000	2000	3.62	12.7	0.216 (0.286)	0.17	710	640		
04D□ -VL050-05		5:1		600	1200	6.03	18.0*3		0.15				
04D□ -VL070-10		10:1		300	600	12.1	35.0*3		0.17	1200	1100		
04D□ -VL070-25		25:1	90	120	240	28.6	50.0*3		0.17				
04D□ -VL090-50		50:1		60	120	57.2	125*3		0.27	2400	2200		
08D□ -VL070-03	08D7F6□	3:1	95	1000	2000	6.81	23.8	0.775 (0.955)	0.53	1200	1100		
08D□ -VL070-05		5:1		600	1200	11.4	39.7		0.46				
08D□ -VL090-10		10:1		300	600	22.7	79.4		0.70	2400	2200		
08D□ -VL090-25		25:1	90	120	240	53.8	125*3		0.74				
08D□ -VL120-50		50:1		60	120	108	330*3		0.76	4300	3900		

Note: The values in parentheses are for Servo Motors with Holding Brakes (indicated by value of □ in model numbers).

*1. The gear efficiency depends on operating conditions such as the output torque, motor speed, and temperature.

*2. The gear motor output torque is expressed by the following formula: Output Torque = (Servo Motor Output Torque) x (Gearing Ratio) x (Gearing Efficiency). The values in the table are typical values for the rated torque, rated motor speed, and a surrounding air temperature of 25°C. They are reference values only.

*3. The output torque of the gear motor is limited by the mechanical limit of the gear head. Operation above this limit could result in premature failure of the gear motor.


Important

During operation of the gear motor, losses due to inefficiencies of the gearing mechanism are generated. The losses vary as the conditions for gear motor torque and speed change. Temperature rise can vary based on the mechanical inefficiencies and the heat dissipation conditions. For heat dissipation conditions, check the gear and motor temperatures with the actual equipment. If operating temperatures are too high, implement the following measures.

- Decrease the load ratio.
- Change the heat dissipation conditions.
- Use forced-air cooling for the motor with a cooling fan or other means.

Servo Motor Overload Protection Characteristics

The overload detection level is set for hot start conditions with a Servo Motor surrounding air temperature of 40°C.

SGM7A-A5, -01, -C2, -02, -04, -06, -08, and -10

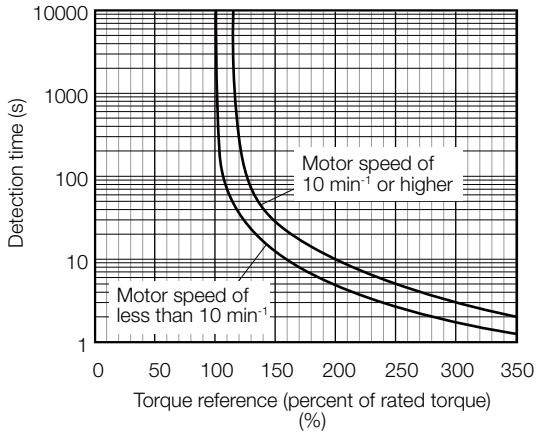

SGM7A-15, -20, -25, -30, -40, -50, and -70

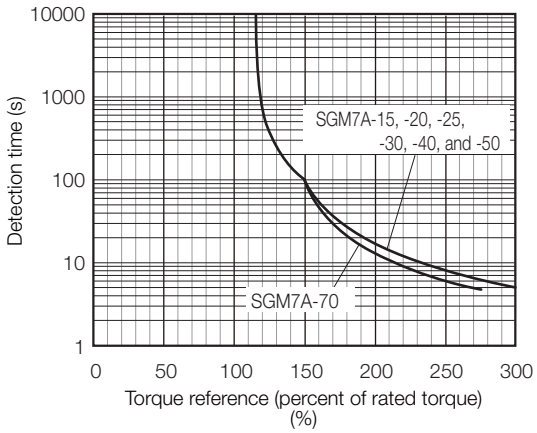

Note: The above overload protection characteristics do not mean that you can perform continuous duty operation with an output of 100% or higher. Use the Servo Motor so that the effective torque remains within the continuous duty zone given in *Torque-Motor Speed Characteristics (200 V Models -A5A to -10A)* on page 56 or in *Torque-Motor Speed Characteristics (200 V Models -15A to -70A)* on page 58.

Allowable Load Moment of Inertia Scaling Factor for SERVOPACKs without Built-in Regenerative Resistors

The following graphs show the allowable load moment of inertia scaling factor of the motor speed for SERVOPACKs* without built-in regenerative resistors when an External Regenerative Resistor is not connected.

If the Servo Motor exceeds the allowable load moment of inertia, an overvoltage alarm may occur in the SERVOPACK.

These graphs provide reference data for deceleration at the rated torque or higher with a 200-VAC power supply input.

SGM7A-A5A

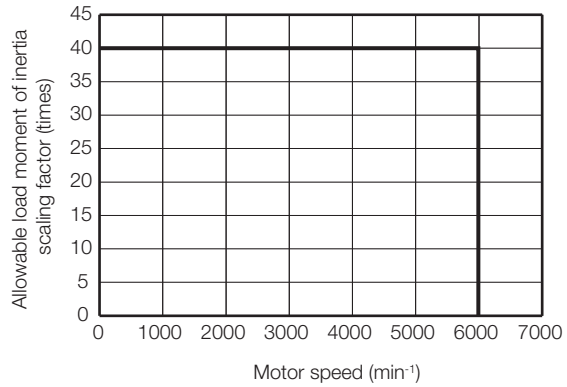

SGM7A-01A

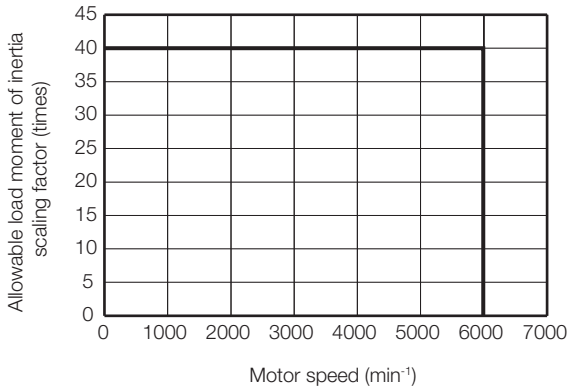

SGM7A-C2A

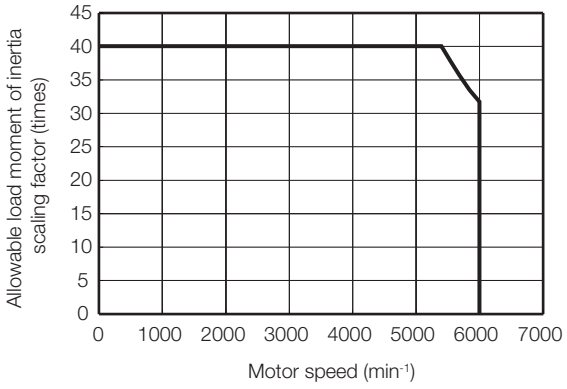

SGM7A-02A

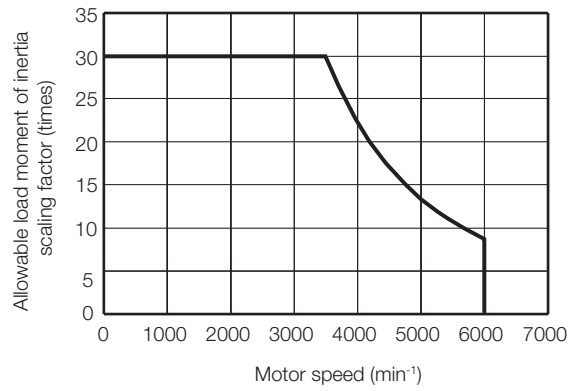

SGM7A-04A

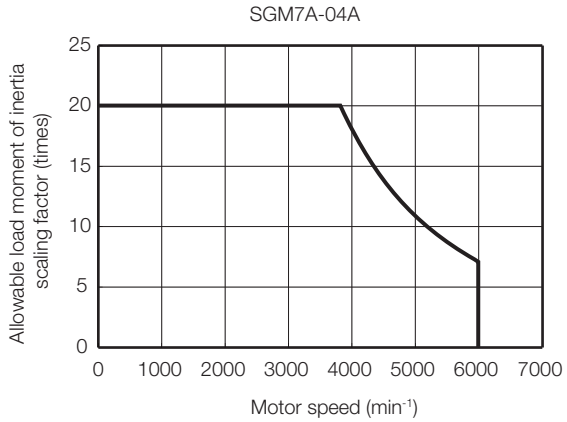

* Applicable SERVOPACK models: SGD7S-R70A, -R90A, -1R6A, or -2R8A

Servo Motor Heat Dissipation Conditions

The Servo Motor ratings are the continuous allowable values at a surrounding air temperature of 40°C when a heat sink is installed on the Servo Motor. If the Servo Motor is mounted on a small device component, the Servo Motor temperature may rise considerably because the surface for heat dissipation becomes smaller. Refer to the following graphs for the relation between the heat sink size and derating rate.

When using Servo Motors with derating, change the detection timing of overload warnings and overload alarms by referring to the motor overload detection level described in the following manual.

📖 *Σ-7-Series AC Servo Drive Rotary Servo Motor Product Manual* (Manual No.: SIEP S800001 36)

Note: The derating rates are applicable only when the average motor speed is less than or equal to the rated motor speed. If the average motor speed exceeds the rated motor speed, consult with your Yaskawa representative.

Important

The actual temperature rise depends on how the heat sink (i.e., the Servo Motor mounting section) is attached to the installation surface, what material is used for the Servo Motor mounting section, and the motor speed. Always check the Servo Motor temperature with the actual equipment.

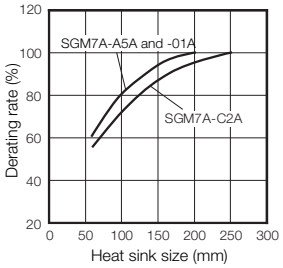

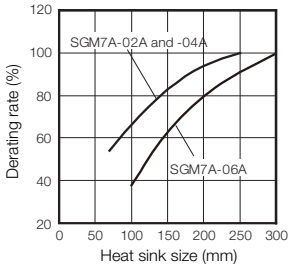

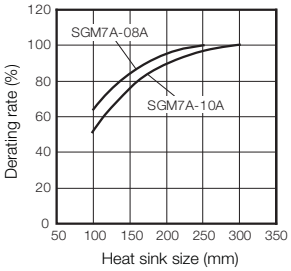

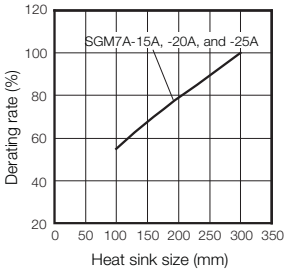

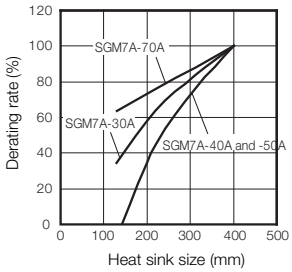

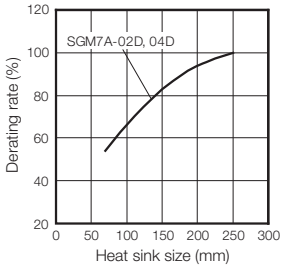

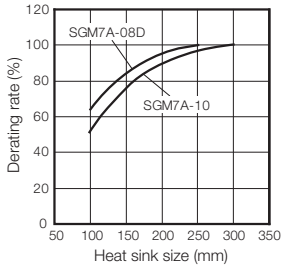

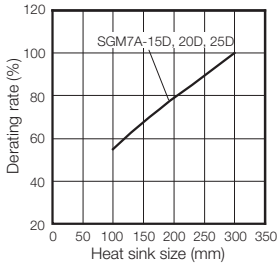

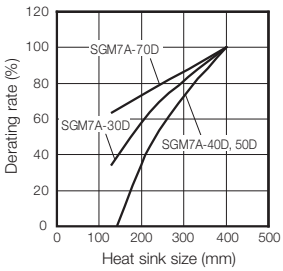

Applications Where the Surrounding Air Temperature of the Servo Motor Exceeds 40°C

The Servo Motor ratings are the continuous allowable values at a surrounding air temperature of 40°C. If you use a Servo Motor at a surrounding air temperature that exceeds 40°C (60°C max.), apply a suitable derating rate from the following graphs.

When using Servo Motors with derating, change the detection timing of overload warnings and overload alarms by referring to the motor overload detection level described in the following manual.

📖 *Σ-7-Series AC Servo Drive Rotary Servo Motor Product Manual* (Manual No.: SIEP S800001 36)

Note: 1. Use the combination of the SERVOPACK and Servo Motor so that the derating conditions are satisfied for both the SERVOPACK and Servo Motor.

2. The derating rates are applicable only when the average motor speed is less than or equal to the rated motor speed. If the average motor speed exceeds the rated motor speed, consult with your Yaskawa representative.

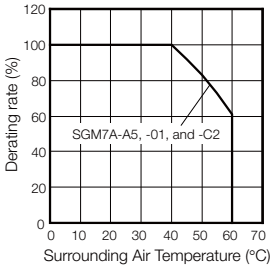

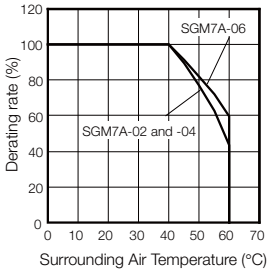

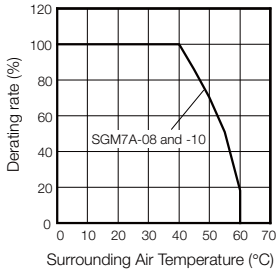

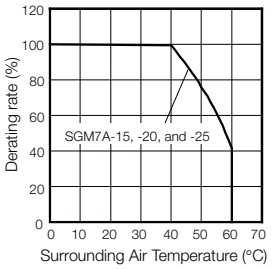

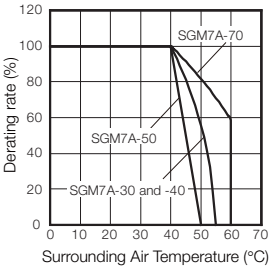

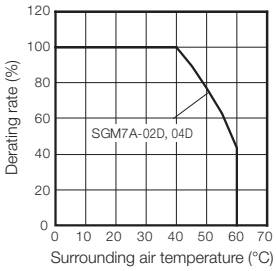

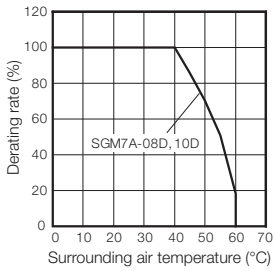

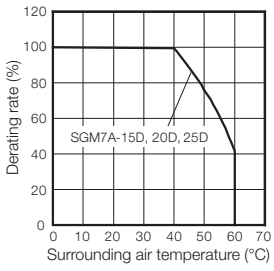

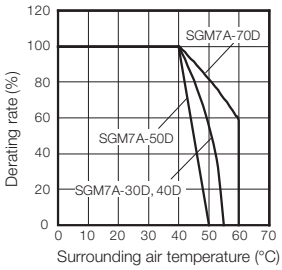

Applications Where the Altitude of the Servo Motor Exceeds 1,000 m

The Servo Motor ratings are the continuous allowable values at an altitude of 1,000 m or less. If you use a Servo Motor at an altitude that exceeds 1,000 m (2,000 m max.), the heat dissipation effect of the air is reduced. Apply the appropriate derating rate from the following graphs.

When using Servo Motors with derating, change the detection timing of overload warnings and overload alarms by referring to the motor overload detection level described in the following manual.

🕮 *Σ-7-Series AC Servo Drive Rotary Servo Motor Product Manual* (Manual No.: SIEP S800001 36)

Note: 1. Use the combination of the SERVOPACK and Servo Motor so that the derating conditions are satisfied for both the SERVOPACK and Servo Motor.

2. The derating rates are applicable only when the average motor speed is less than or equal to the rated motor speed. If the average motor speed exceeds the rated motor speed, consult with your Yaskawa representative.

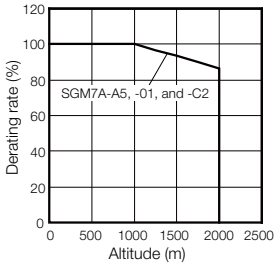

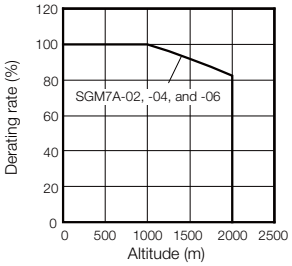

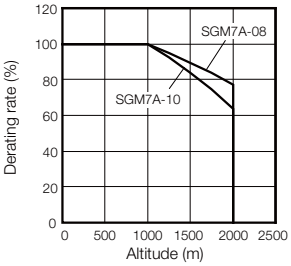

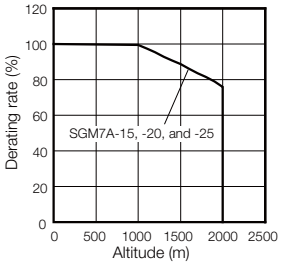

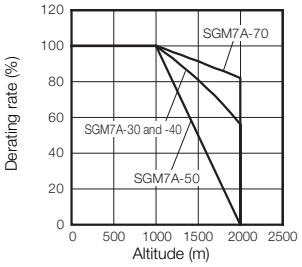

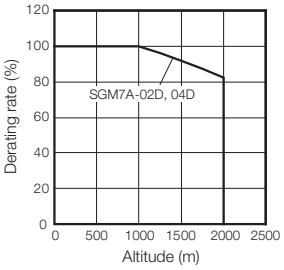

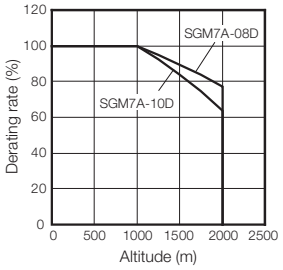

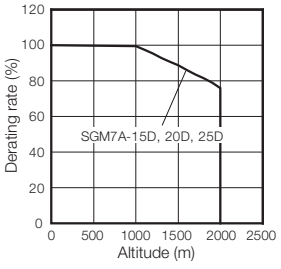

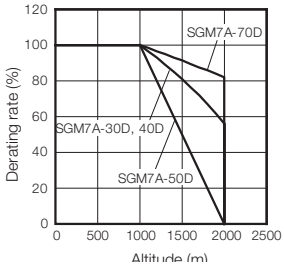

External Dimensions

Servo Motors (200V)

◆ SGM7A-A5A, -01A, and -C2A (200V Models)

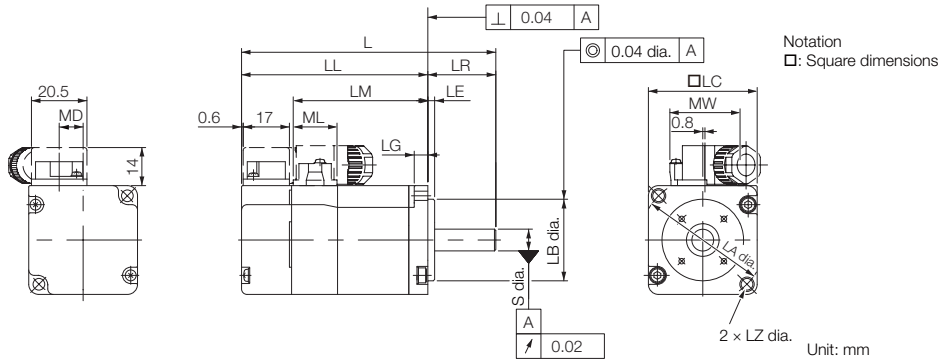

Model SGM7A-	L	LL	LM	Flange Dimensions							S
				LR	LE	LG	LC	LA	LB	LZ	
A5A□ A2□	81.5 (122)	56.5 (97)	37.9	25	2.5	5	40	46	$30^{0}_{-0.021}$	4.3	$8^{0}_{-0.009}$
01A□ A2□	93.5 (134)	68.5 (109)	49.9	25	2.5	5	40	46	$30^{0}_{-0.021}$	4.3	$8^{0}_{-0.009}$
C2A□ A2□	105.5 (153.5)	80.5 (128.5)	61.9	25	2.5	5	40	46	$30^{0}_{-0.021}$	4.3	$8^{0}_{-0.009}$

Model SGM7A-	MD	MW	ML	Approx. Mass [kg]
A5A□ A2□	8.8	25.8	16.1	0.3 (0.6)
01A□ A2□	8.8	25.8	16.1	0.4 (0.7)
C2A□ A2□	8.8	25.8	16.1	0.5 (0.8)

Note: 1. The values in parentheses are for Servo Motors with Holding Brakes.
2. Refer to the following section for detailed shaft end specifications.
☞ **Shaft End Specifications for SGM7A-A5 to -10 (200 V Models) (page 73)**

■ Specifications of Options

• Oil Seal

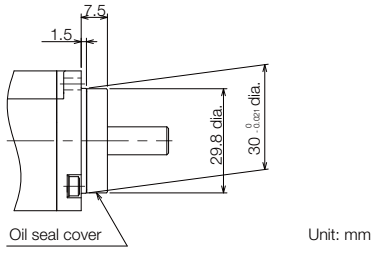

◆ SGM7A-02A to -10A (200 V Models)

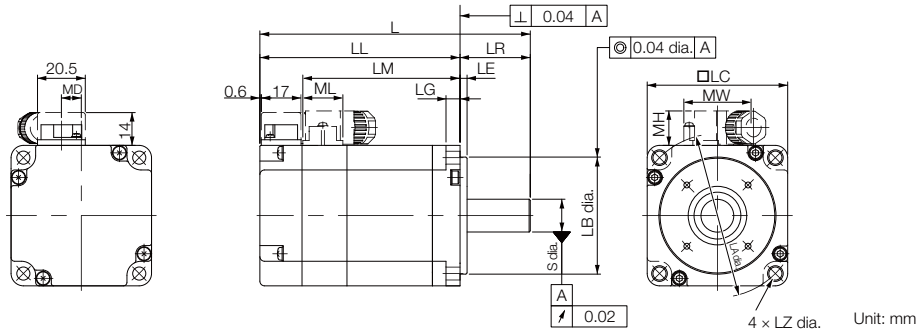

Unit: mm

Model SGM7A-	L	LL	LM	Flange Dimensions							S
				LR	LE	LG	LC	LA	LB	LZ	
02A□ A2□	99.5 (140)	69.5 (110)	51.2	30	3	6	60	70	$50^{0}_{-0.025}$	5.5	$14^{0}_{-0.011}$
04A□ A2□	115.5 (156)	85.5 (126)	67.2	30	3	6	60	70	$50^{0}_{-0.025}$	5.5	$14^{0}_{-0.011}$
06A□ A2□	137.5 (191.5)	107.5 (161.5)	89.2	30	3	6	60	70	$50^{0}_{-0.025}$	5.5	$14^{0}_{-0.011}$
08A□ A2□	137 (184)	97 (144)	78.5	40	3	8	80	90	$70^{0}_{-0.030}$	7	$19^{0}_{-0.013}$
10A□ A2□	162 (209)	122 (169)	103.5	40	3	8	80	90	$70^{0}_{-0.030}$	7	$19^{0}_{-0.013}$

Model SGM7A-	MD	MW	MH	ML	Approx. Mass [kg]
02A□ A2□	8.5	28.7	14.7	17.1	0.8 (1.4)
04A□ A2□	8.5	28.7	14.7	17.1	1.2 (1.8)
06A□ A2□	8.5	28.7	14.7	17.1	1.6 (2.2)
08A□ A2□	13.6	38	14.7	19.3	2.3 (2.9)
10A□ A2□	13.6	38	14.7	19.3	3.1 (3.7)

Note: 1. The values in parentheses are for Servo Motors with Holding Brakes.

2. Refer to the following section for detailed shaft end specifications.

☞ **Shaft End Specifications for SGM7A-A5 to -10 (200 V Models) (page 73)**

■ Specifications of Options

• Oil Seal

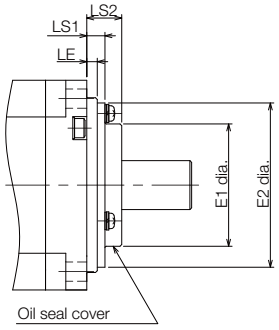

Unit: mm

Model SGM7A-	Dimensions with Oil Seal			
	E1	E2	LS1	LS2
02A, 04A, 06A	35	47	5.2	10
08A, 10A	47	61	5.5	11

Shaft End Specifications for SGM7A-A5 to -10 (200 V Models)

◆ SGM7A-□□□□□□□

Code	Specification
2	Straight without key
6	Straight with key and tap for one location (Key slot is JIS B1301-1996 fastening type.)
B	With two flat seats

Shaft End Details		Servo Motor Model SGM7A-							
		A5	01	C2	02	04	06	08	10
Code: 2 (Straight without Key)									
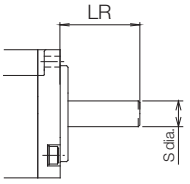	LR	25			30			40	
	S	$8^{0}_{-0.009}$			$14^{0}_{-0.011}$			$19^{0}_{-0.013}$	
Code: 6 (Straight with Key and Tap)									
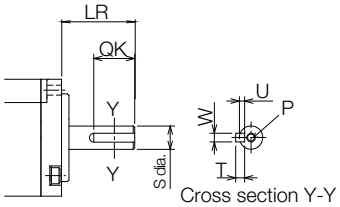	LR	25			30			40	
	QK	14			14			22	
	S	$8^{0}_{-0.009}$			$14^{0}_{-0.011}$			$19^{0}_{-0.013}$	
	W	3			5			6	
	T	3			5			6	
	U	1.8			3			3.5	
	P	M3 × 6L			M5 × 8L			M6 × 10L	
Code: B (with Two Flat Seats)									
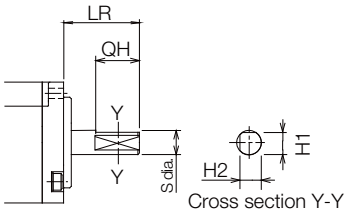	LR	25			30			40	
	QH	15			15			22	
	S	$8^{0}_{-0.009}$			$14^{0}_{-0.011}$			$19^{0}_{-0.013}$	
	H1	7.5			13			18	
	H2	7.5			13			18	

Servo Motors (400V)

◆ SGM7A-02D to -04D (400 V Model)

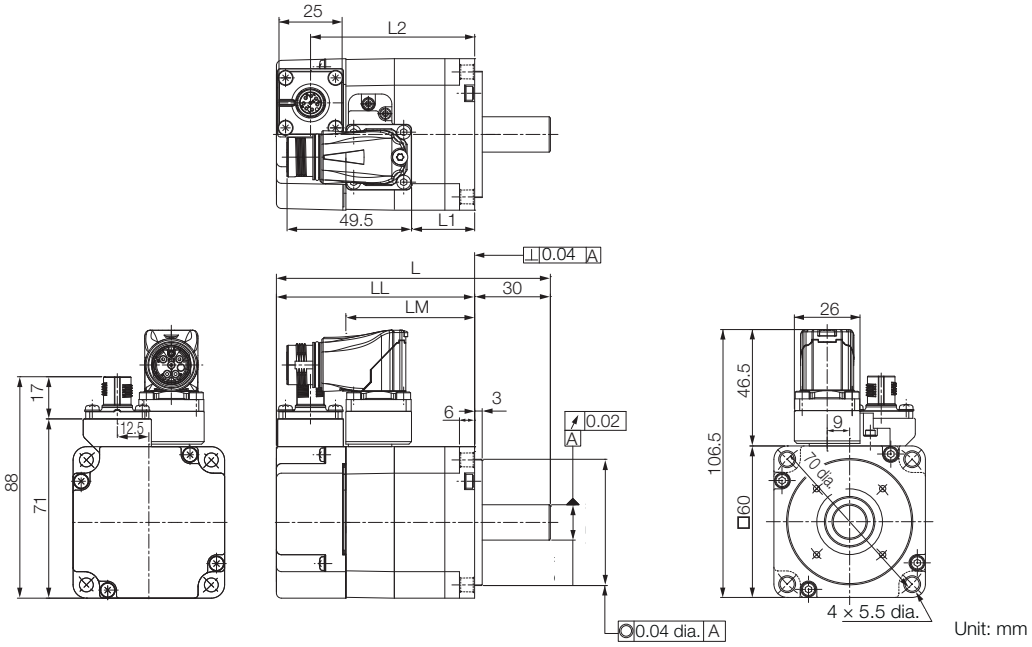

Model SGM7A-	L	LL	LM	LB	S	L1	L2	Approx. Mass [kg]
02D□ F2□	108 (141.5)	78.5 (118.5)	51.2	$50^{0}_{-0.025}$	$14^{0}_{-0.011}$	25	65 (105)	0.9 (1.5)
04D□ F2□	125 (165)	95 (135)	67.2	$50^{0}_{-0.025}$	$14^{0}_{-0.011}$	41.5	81.5 (121.5)	1.2 (1.8)

Note: 1. The values in parentheses are for Servo Motors with Holding Brakes.

■ Specifications of Options

• Oil Seal

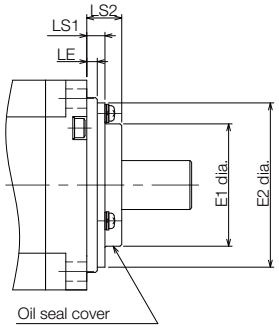

Model SGM7A-	Dimensions with Oil Seal			
	E1	E2	LS1	LS2
02D, 04D,	35	47	5.2	10

◆ SGM7A-08D (400 V Model)

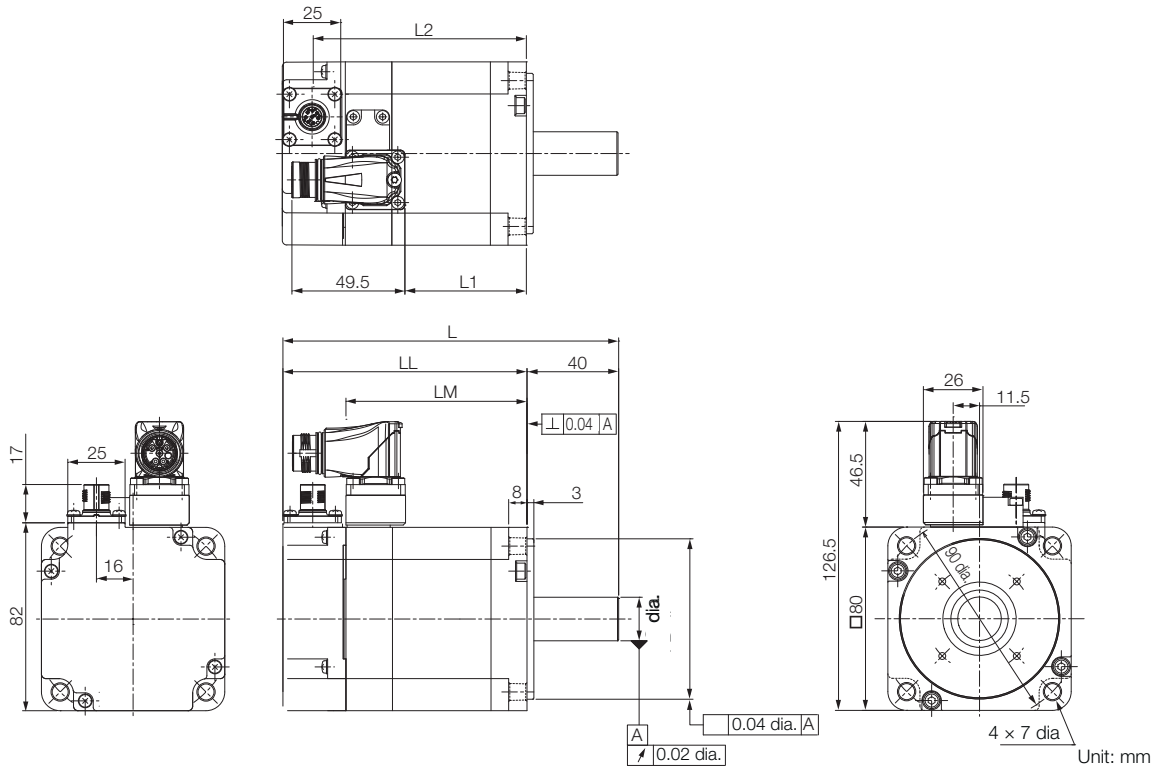

Model SGM7A-	L	LL	LM	LB	S	L1	L2	Approx. Mass [kg]
08D□ F2□	146.5 (193.5)	106.5 (153.5)	79	$70^{0}_{-0.030}$	$19^{0}_{-0.013}$	53	93 (140)	2.4 (3.0)

Note: 1. The values in parentheses are for Servo Motors with Holding Brakes.

■ Specifications of Options

• Oil Seal

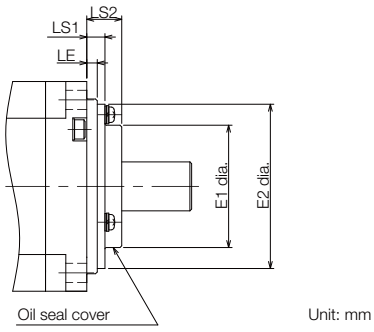

Model SGM7A-	Dimensions with Oil Seal			
	E1	E2	LS1	LS2
08D	47	61	5.5	11

◆ SGM7A-10D (400 V Model)

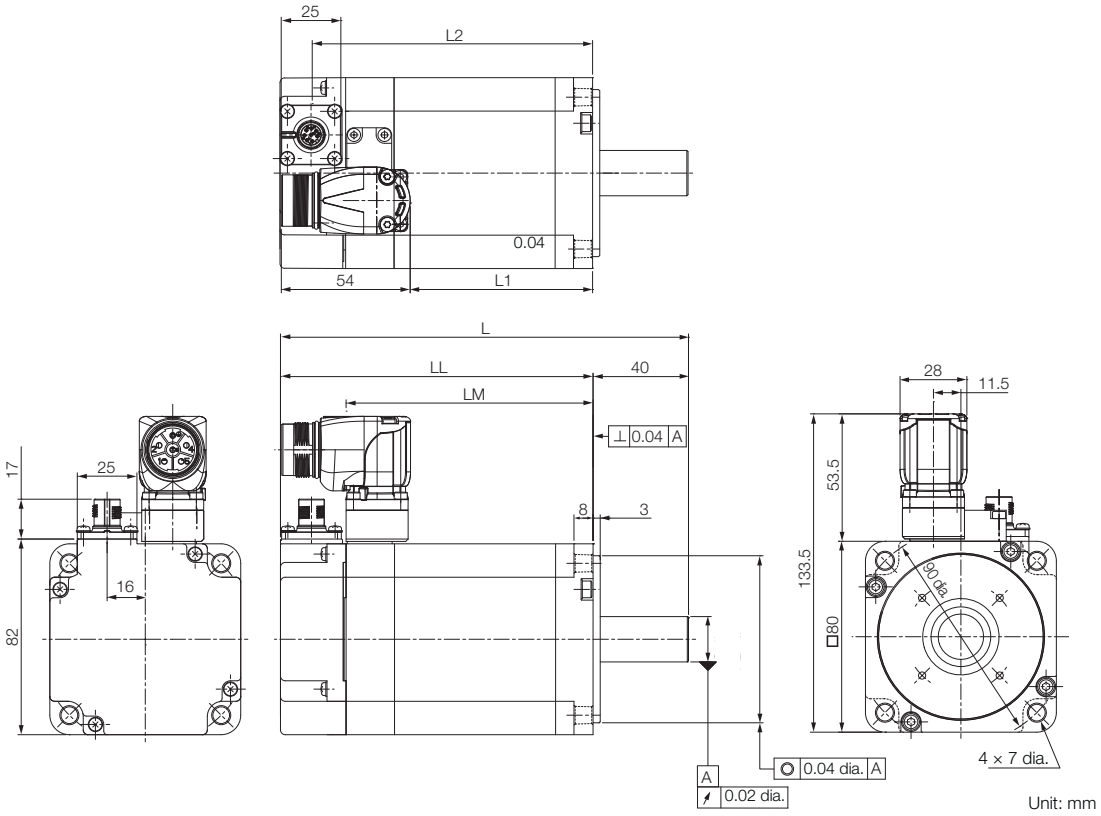

Model SGM7A-	L	LL	LM	LB	S	L1	L2	Approx. Mass [kg]
10D□ F2□	171 (218)	131 (178)	103.5	$70^{0}_{-0.030}$	$19^{0}_{-0.013}$	77	117.5 (164.5)	3.2 (3.8)

Note: 1. The values in parentheses are for Servo Motors with Holding Brakes.

■ Specifications of Options

• Oil Seal

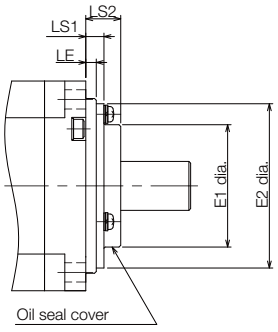

Model SGM7A-	Dimensions with Oil Seal			
	E1	E2	LS1	LS2
10D	47	61	5.5	11

Shaft End Specifications for SGM7A-02 to -10 (400 V Models)

◆ SGM7A-□□□□□□□

Code	Specification
2	Straight without key
6	Straight with key and tap for one location (Key slot is JIS B1301-1996 fastening type.)

Shaft End Details		Servo Motor Model SGM7A-			
		02	04	08	10
Code: 2 (Straight without Key)					
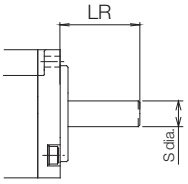	LR	30		40	
	S	$14^{0}_{-0.011}$		$19^{0}_{-0.013}$	
Code: 6 (Straight with Key and Tap)					
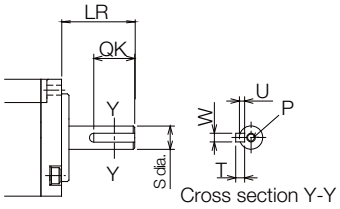	LR	30		40	
	QK	14		22	
	S	$14^{0}_{-0.011}$		$19^{0}_{-0.013}$	
	W	5		6	
	T	5		6	
	U	3		3.5	
	P	M5 × 8L		M6 × 10L	

Servo Motors without Holding Brakes (200V)

◆ SGM7A-15A, -20A, and -25A

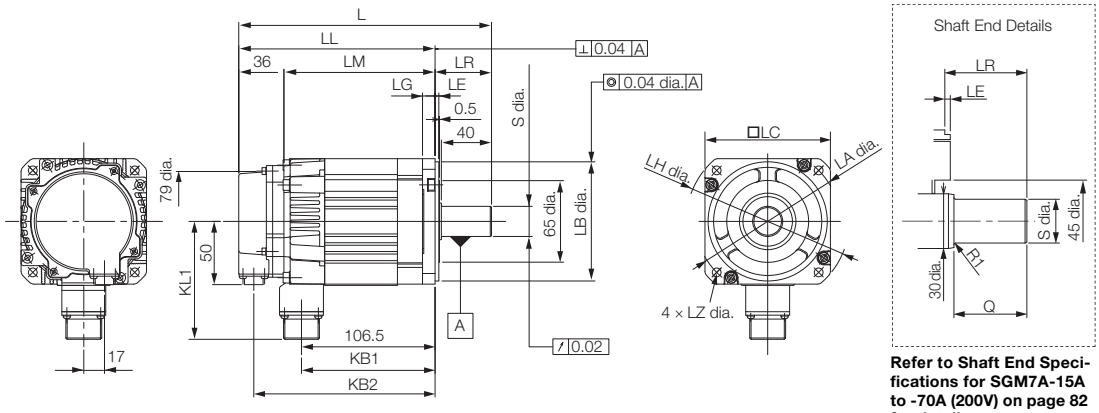

Refer to Shaft End Specifications for SGM7A-15A to -70A (200V) on page 82 for details.

Unit: mm

Model SGM7A-	L	LL	LM	LR	KB1	KB2	KL1
15A□ A21	202	157	121	45	107	145	94
20A□ A21	218	173	137	45	123	161	94
25A□ A21	241	196	160	45	146	184	94

Model SGM7A-	Flange Dimensions							Shaft End Dimensions		Approx. Mass [kg]
	LA	LB	LC	LE	LG	LH	LZ	S	Q	
15A□ A21	115	$95^{0}_{-0.035}$	100	3	10	130	7	$24^{0}_{-0.013}$	40	4.6
20A□ A21	115	$95^{0}_{-0.035}$	100	3	10	130	7	$24^{0}_{-0.013}$	40	5.4
25A□ A21	115	$95^{0}_{-0.035}$	100	3	10	130	7	$24^{0}_{-0.013}$	40	6.8

Note: Servo Motors with Oil Seals have the same dimensions.

◆ SGM7A-30A, -40A, and -50A

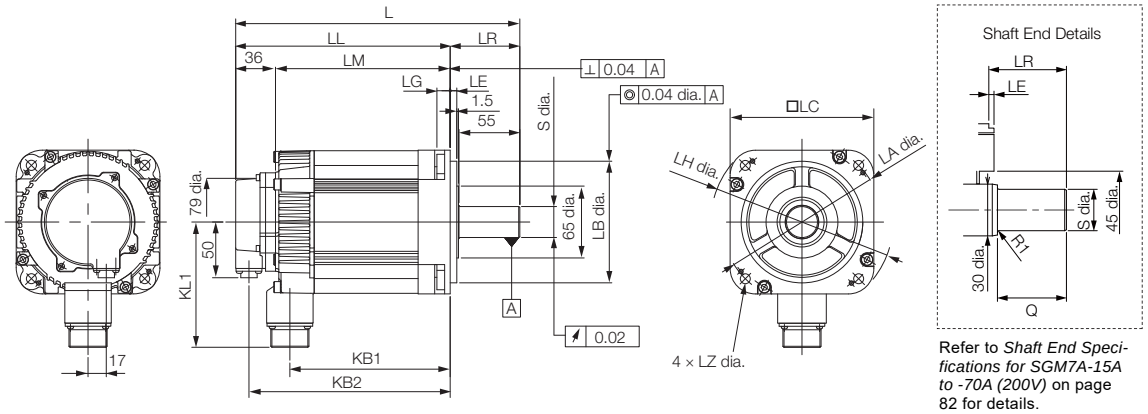

Refer to *Shaft End Specifications for SGM7A-15A to -70A (200V)* on page 82 for details.

Unit: mm

Model SGM7A-	L	LL	LM	LR	KB1	KB2	KL1
30A□ A21	257	194	158	63	145	182	114
40A□ A21	296	233	197	63	184	221	114
50A□ A21	336	273	237	63	224	261	114

Model SGM7A-	Flange Dimensions							Shaft End Dimensions		Approx. Mass [kg]
	LA	LB	LC	LE	LG	LH	LZ	S	Q	
30A□ A21	145	$110^{0}_{-0.035}$	130	6	12	165	9	$28^{0}_{-0.013}$	55	10.5
40A□ A21	145	$110^{0}_{-0.035}$	130	6	12	165	9	$28^{0}_{-0.013}$	55	13.5
50A□ A21	145	$110^{0}_{-0.035}$	130	6	12	165	9	$28^{0}_{-0.013}$	55	16.5

Note: Servo Motors with Oil Seals have the same dimensions.
Refer to the following section for information on connectors.

☞ ◆ *SGM7A-15 to -50 without Holding Brakes* (page 102)

◆ SGM7A-70A

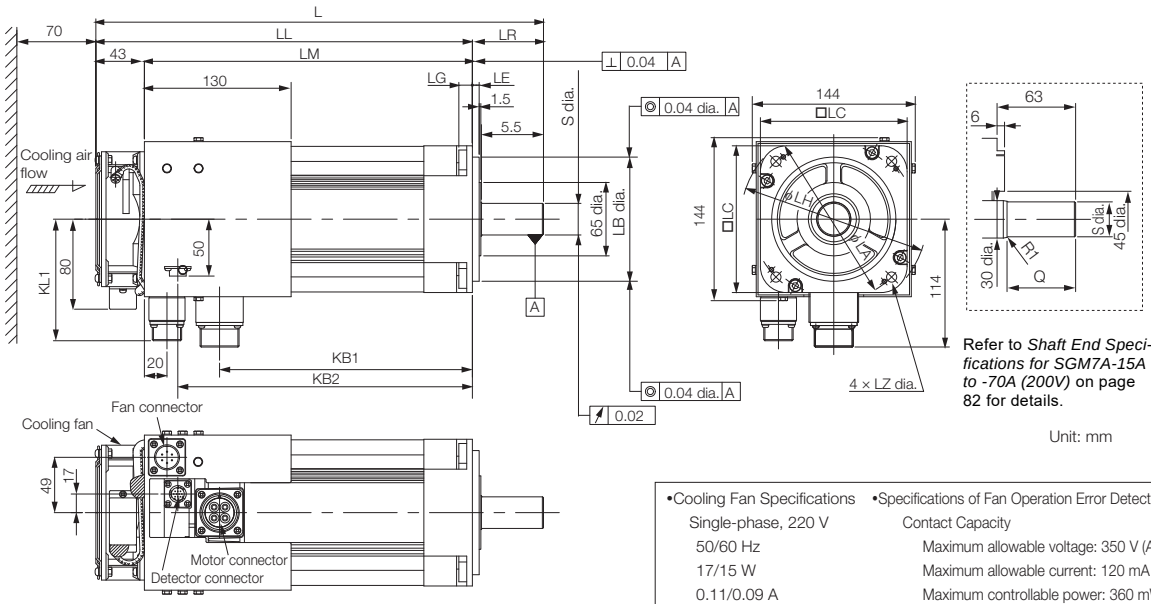

Refer to *Shaft End Specifications for SGM7A-15A to -70A (200V)* on page 82 for details.

Unit: mm

•Cooling Fan Specifications
Single-phase, 220 V
50/60 Hz
17/15 W
0.11/0.09 A

•Specifications of Fan Operation Error Detector
Contact Capacity
Maximum allowable voltage: 350 V (AC/DC)
Maximum allowable current: 120 mA (AC/ DC)
Maximum controllable power: 360 mW
Alarm Contacts
ON for normal fan rotation.
OFF at 1,680 ± 100 min^{-1} max.
OFF for 3 seconds at startup.

Model SGM7A-	L	LL	LM	LR	KB1	KB2	KL1
70A□ A21	397	334	291	63	224	261	108

Model SGM7A-	Flange Dimensions							Shaft End Dimensions		Approx. Mass [kg]
	LA	LB	LC	LE	LG	LH	LZ	S	Q	
70A□ A21	145	$110^{0}_{-0.035}$	130	6	12	165	9	$28^{0}_{-0.013}$	55	18.5

* Leave a minimum space of 70 mm around the Servo Motor from walls and other equipment to allow for a sufficient amount of cooling air.

Note: Servo Motors with Oil Seals have the same dimensions.
Refer to the following section for information on connectors.

☞ ◆ **SGM7A-70 without Holding Brakes** (page 102)

Servo Motors with Holding Brakes (200V)

◆ SGM7A-15A to -50A

• SGM7A-15A to -25A

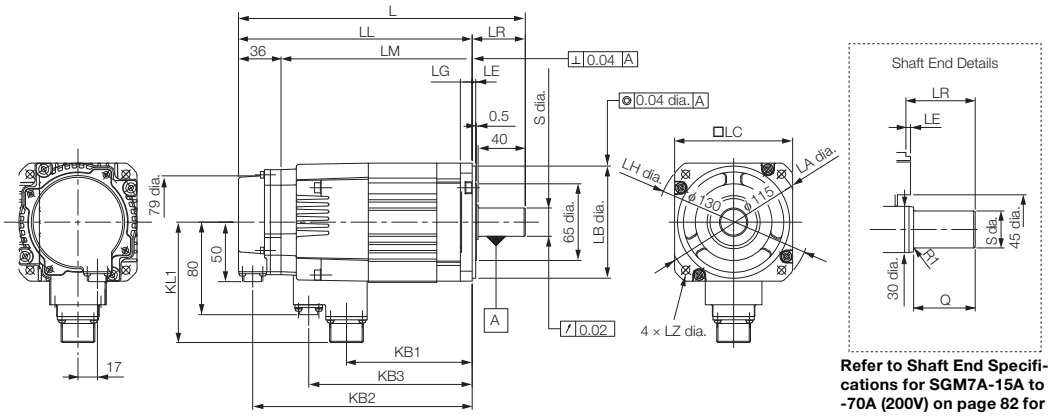

Refer to Shaft End Specifications for SGM7A-15A to -70A (200V) on page 82 for

Unit: mm

• SGM7A-30A to -50A

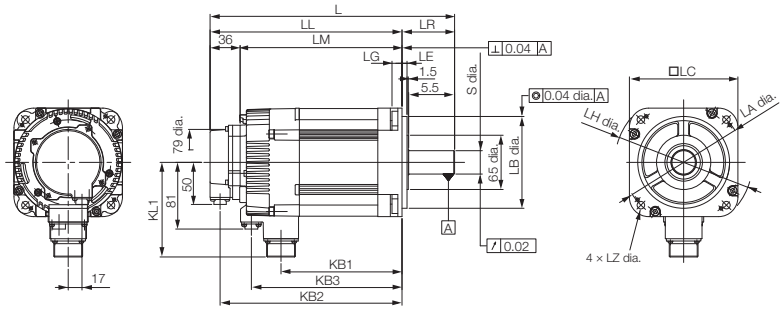

Model SGM7A-	L	LL	LM	LR	KB1	KB2	KB3	KL1
15A□ A2C	243	198	162	45	107	186	139	102
20A□ A2C	259	214	178	45	123	202	155	102
25A□ A2C	292	247	211	45	156	235	188	102
30A□ A2C	293	232	196	63	145	220	181	119
40A□ A2C	332	269	233	63	184	257	220	119
50A□ A2C	372	309	273	63	224	297	260	119

Model SGM7A-	Flange Dimensions							Shaft End Dimensions		Approx. Mass [kg]
	LA	LB	LC	LE	LG	LH	LZ	S	Q	
15A□ A2C	115	$95^{0}_{-0.035}$	100	3	10	130	7	$24^{0}_{-0.013}$	40	6.0
20A□ A2C	115	$95^{0}_{-0.035}$	100	3	10	130	7	$24^{0}_{-0.013}$	40	6.8
25A□ A2C	115	$95^{0}_{-0.035}$	100	3	10	130	7	$24^{0}_{-0.013}$	40	8.7
30A□ A2C	145	$110^{0}_{-0.035}$	130	6	12	165	9	$28^{0}_{-0.013}$	55	13
40A□ A2C	145	$110^{0}_{-0.035}$	130	6	12	165	9	$28^{0}_{-0.013}$	55	16
50A□ A2C	145	$110^{0}_{-0.035}$	130	6	12	165	9	$28^{0}_{-0.013}$	55	19

Note: Servo Motors with Oil Seals have the same dimensions.
Refer to the following section for information on connectors.

☞ ◆ *SGM7A-15 to -50 with Holding Brakes* (page 103)

Shaft End Specifications for SGM7A-15A to -70A (200V)

◆ SGM7A-□□□□□□□

Code	Specification
2	Straight without key
6	Straight with key and tap for one location (Key slot is JIS B1301-1996 fastening type.)

Shaft End Details		Servo Motor Model SGM7A-						
		15A	20A	25A	30A	40A	50A	70A
Code: 2 (Straight without Key)								
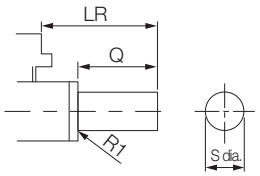	LR	45			63			
	Q	40			55			
	S	$24^{0}_{-0.013}$			$28^{0}_{-0.013}$			
Code: 6 (Straight with Key and Tap)								
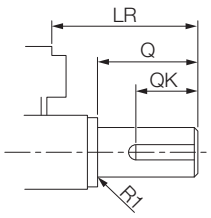	LR	45			63			
	Q	40			55			
	QK	32			50			
	S	$24^{0}_{-0.013}$			$28^{0}_{-0.013}$			
	W	8						
	T	7						
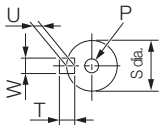	U	4						
	P	M8 screw, Depth: 16						

Servo Motors (400V)

◆ SGM7A-15D to -25D (400 V Models)

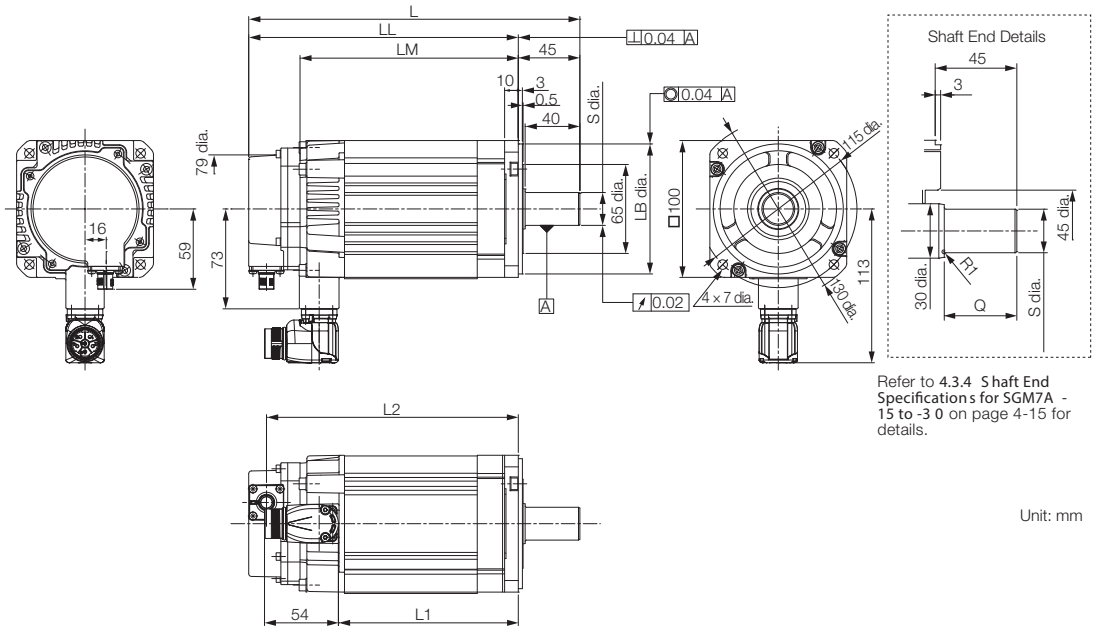

Refer to **4.3.4 Shaft End Specifications for SGM7A -15 to -30** on page 4-15 for details.

Unit: mm

Model SGM7A-	L	LL	LM	L1	L2	LB	Shaft End Dimensions		Approx. Mass [kg]
							S	Q	
15D□ F2□	204 (245)	159 (200)	121 (162)	90	145 (187)	$95^{\ 0}_{-0.035}$	$24^{\ 0}_{-0.013}$	40	4.7 (6.1)
20D□ F2□	220 (261)	175 (216)	137 (178)	106	161 (203)	$95^{\ 0}_{-0.035}$	$24^{\ 0}_{-0.013}$	40	5.5 (6.9)
25D□ F2□	243 (294)	198 (249)	160 (211)	129	184 (235)	$95^{\ 0}_{-0.035}$	$24^{\ 0}_{-0.013}$	40	6.9 (8.8)

Note: 1. The values in parentheses are for Servo Motors with Holding Brakes.
2. Servomotors with Dust Seals have the same dimensions.
3. Refer to Shaft End Specifications for SGM7A-15 to -70 for details.

◆ SGM7A-30D to -50D (400 V Models)

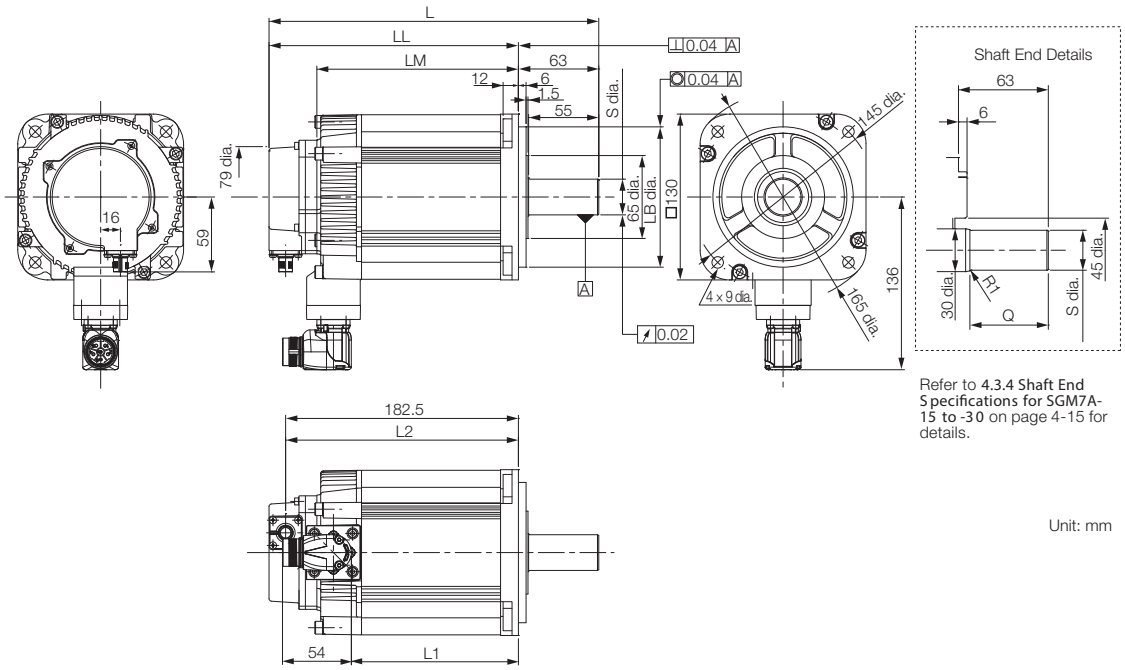

Refer to **4.3.4 Shaft End Specifications for SGM7A-15 to -30** on page 4-15 for details.

Unit: mm

Model SGM7A-	L	LL	LM	L1	L2	LB	Shaft End Dimensions		Approx. Mass [kg]
							S	Q	
30D□ F2□	259 (295)	196 (232)	158 (194)	131	183 (219)	$110^{\ 0}_{-0.035}$	$28^{\ 0}_{-0.013}$	55	10.6 (13.1)
40D□ F2□	298 (334)	235 (271)	197 (233)	170	222 (258)	$110^{\ 0}_{-0.035}$	$28^{\ 0}_{-0.013}$	55	14.0 (16.5)
50D□ F2□	338 (374)	275 (311)	237 (273)	210	262 (298)	$110^{\ 0}_{-0.035}$	$28^{\ 0}_{-0.013}$	55	17.0 (19.5)

Note: 1. The values in parentheses are for Servo Motors with Holding Brakes.
2. Servomotors with Dust Seals have the same dimensions.
3. Refer to Shaft End Specifications for SGM7A-15 to -70 for details.

◆ SGM7A-70D (400 V Model)

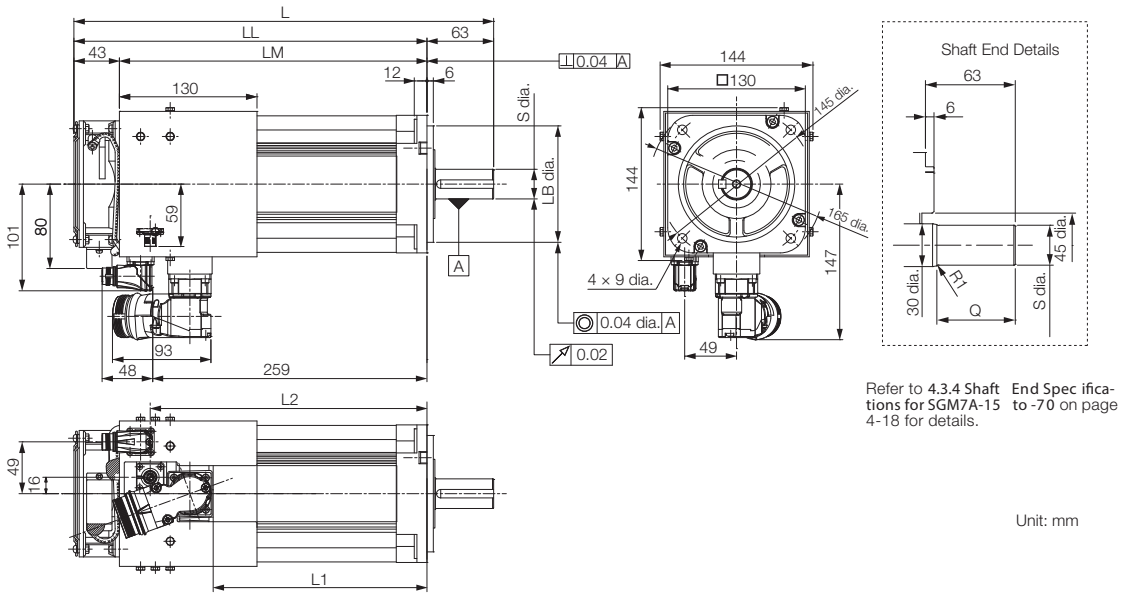

Refer to 4.3.4 Shaft End Specifications for SGM7A-15 to -70 on page 4-18 for details.

Unit: mm

Model SGM7A-	L	LL	LM	L1	L2	LB	Shaft End Dimensions		Approx. Mass [kg]
							S	Q	
70D□ F2□	397	334	291	204	262	$110^{\ 0}_{-0.035}$	$28^{\ 0}_{-0.013}$	55	19

Note: 1. The values in parentheses are for Servo Motors with Holding Brakes.
2. Servomotors with Dust Seals have the same dimensions.
3. Refer to Shaft End Specifications for SGM7A-15 to -70 for details.

■ Cooling Fan Specification

- Single-Phase, 220V
- 50/60 Hz
- 17/15W
- 0.11/0.09 A

Shaft End Specifications for SGM7A-15D to -70D (400V)

◆ SGM7A-□□□□□□□

Code	Specification
2	Straight without key
6	Straight with key and tap for one location (Key slot is JIS B1301-1996 fastening type.)

Shaft End Details		Servo Motor Model SGM7A-						
		15D	20D	25D	30D	40D	50D	70D
Code: 2 (Straight without Key)								
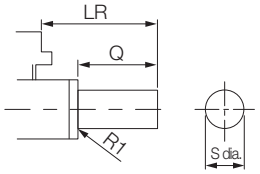	LR	45			63			
	Q	40			55			
	S	$24^{0}_{-0.013}$			$28^{0}_{-0.013}$			
Code: 6 (Straight with Key and Tap)								
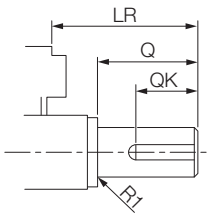	LR	45			63			
	Q	40			55			
	QK	32			50			
	S	$24^{0}_{-0.013}$			$28^{0}_{-0.013}$			
	W	8						
	T	7						
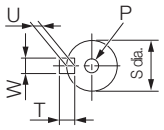	U	4						
	P	M8 screw, Depth: 16						

Connector Specifications (400V)

◆ SGM7A-02D to -70D

Encoder Connector Specifications

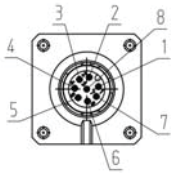

Receptacle
Size: M12
Part number: 1419959
Model:
SACC-MSQ-M12MS-25-3,2 SCO
Manufacturer: Phoenix Contact

1	PG 5V
2	PG 0V
3	FG
4	BAT (+)
5	BAT (-)
6	Data (+)
7	Data (-)
8	Empty
Housing	Shield

◆ SGM7-02D to -08D

Servo Motor Connector Specifications

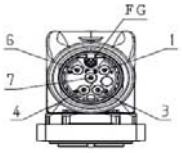

Receptacle
Size: M17
Part number: 1620448
Model: ST-5EP1N8AA500S
Manufacturer: Phoenix Contact

1	(Brake)
3	U
4	V
5	Empty
6	(Brake)
7	W
FG	FG
Housing	Shield

◆ SGM7-10D to -50D

Servo Motor Connector Specifications

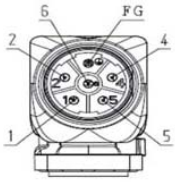

Receptacle
Size: M23
Part number: 1617905
Model: ST-5EP1N8AAD00S
Manufacturer: Phoenix Contact

1	V
2	(Brake)
4	(Brake)
5	U
6	W
FG	FG
Housing	Shield

◆ SGM7-70D

Servo Motor Connector Specifications

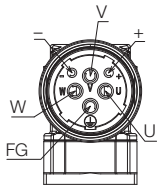

Receptacle
Size: M40
Part number: 1607927
Model: SM-5EPWN8AAD00S
Manufacturer: Phoenix Contact

U	U
V	V
W	W
+	Empty
-	Empty
FG	FG
Housing	Shield

◆ SGM7-70D

Servo Motor Connector Specifications

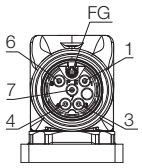

Receptacle
Size: M40
Part number: 1617927
Model: ST-5EP1N8AAD00S
Manufacturer: Phoenix Contact

1	ALARM TERMINAL
3	FAN MOTOR
4	FAN MOTOR
6	ALARM TERMINAL
7	Empty
FG	FG
Housing	Shield

Servo Motor Connector Rotational Angle (400 V)

◆ SGM7-02D to -70D

SGM7A-02 to -10

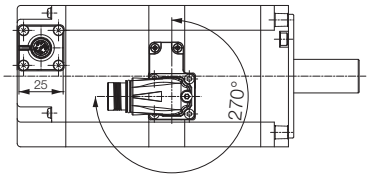

SGM7A-15 to -25

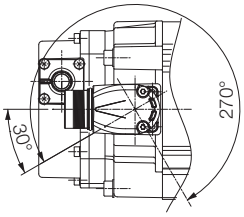

SGM7A-30 to -50

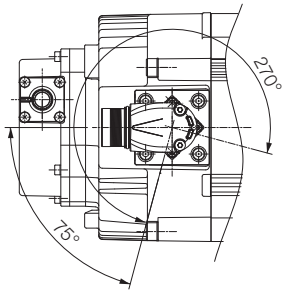

SGM7A-70

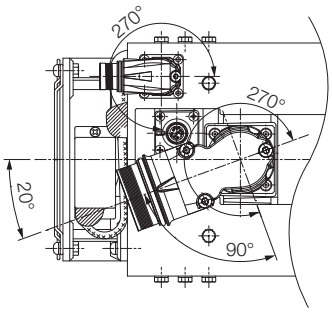

Allowable number of rotations: 10

Gear Motors

◆ Gear Motor Models: 100W, 200W, 400W (S7A01, S7A02, S7A04)

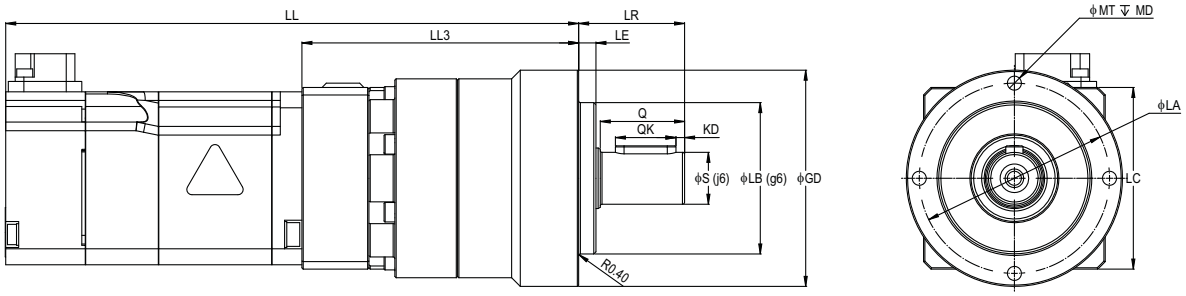

Shaft Detail (VL050 Models Only)

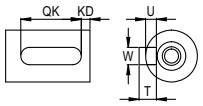

Shaft Detail (All Other Models)

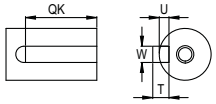

	Model S7A	LL	LL3	LR	LE	ϕS	ϕLB	ϕGD	LC	ϕLA	ϕMT	MD	Q	QK	KD	W	U	T
100 W Models																		
200 V	01A□ -VL050-03	133.5 (174)	65	24.5	4	12	35	50	42	44	M4	8	19.5	14	2	4	2.5	4
	01A□ -VL050-05																	
	01A□ -VL050-10																	
	01A□ -VL050-25	150 (190.5)	81.5															
	01A□ -VL070-50	163.5 (204)	95	36	5	16	52	70	52	62	M5	10	28	22	0	5	3	5
200 W Models																		
200 V	02A□ -VL050-03	137.5 (178	68	24.5	4	12	35	50	65	44	M4	8	19.5	14	2	4	2.5	4
	02A□ -VL050-05																	
	02A□ -VL070-10	149.5 (190)	80	36	5	16	52	70		62	M5	10	28	22	0	5	3	5
	02A□ -VL070-25	170.5 (211)	101															
	02A□ -VL070-50																	
400 V	02D□ -VL050-03	146.5 (186.5)	68	24.5	4	12	35	50	65	44	M4	8	19.5	14	2	4	2.5	4
	02D□ -VL050-05																	
	02D□ -VL070-10	158.5 (198.5)	80	36	5	16	52	70		62	M5	10	28	22	0	5	3	5
	02D□ -VL070-25	179.5 (219.5)	101															
	02D□ -VL070-50																	
400 W Models																		
200 V	04A□ -VL050-03	153.5 (194)	68	24.5	4	12	52	70	65	44	M4	8	19.5	14	2	4	2.5	4
	04A□ -VL050-05																	
	04A□ -VL070-10	165.5 (206)	80	36	5	16	68	90		62	M5	10	28	22	0	05	3	5
	04A□ -VL070-25	186.5 (227)	101															
	04A□ -VL090-50	204.5 (245)	119	46	7	22	90	120		80	M6	12	36	28		6	3.5	6
400 V	04D□ -VL050-03	163 (203)	68	24.5	4	12	52	70	65	44	M4	8	19.5	14	2	4	2.5	4
	04D□ -VL050-05																	
	04D□ -VL070-10	175 (215)	80	36	5	16	68	90		62	M5	10	28	22	0	05	3	5
	04D□ -VL070-25	196 (236)	101															
	04D□ -VL090-50	214 (254)	119	46	7	22	90	120		80	M6	12	36	28		6	3.5	6

Note: The values in parentheses are for Servo Motors with Holding Brakes.

◆ Gear Motor Models: 750W, 1.5kW (S7A08, S7A15)

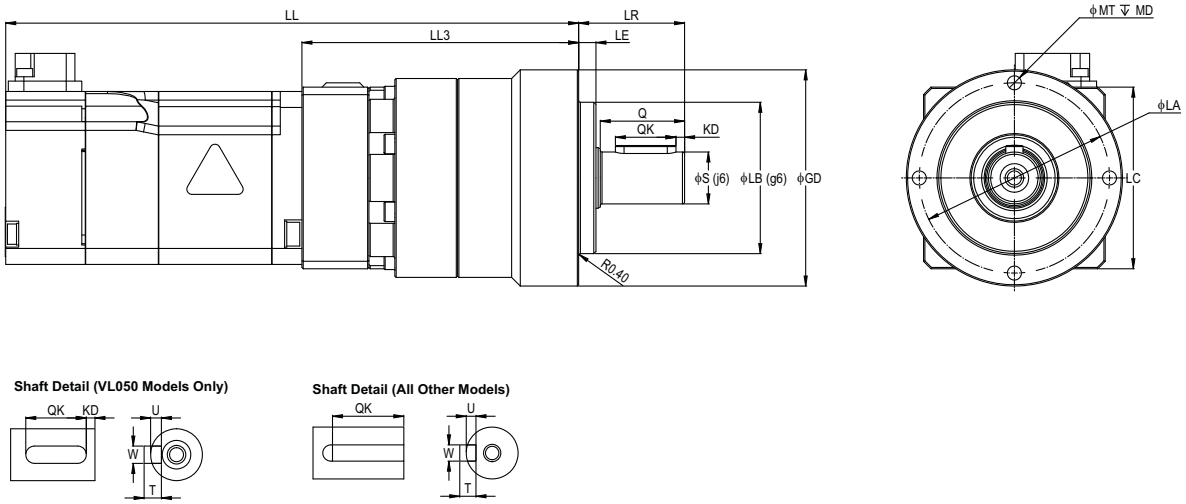

Shaft Detail (VL050 Models Only)

Shaft Detail (All Other Models)

	Model S7A	LL	LL3	LR	LE	ϕS	ϕLB	ϕGD	LC	ϕLA	ϕMT	MD	Q	QK	KD	W	U	T
750 W Models																		
200 V	08A□ -VL070-03	191 (238)	94	36	5	16	52	70	80	62	M5	10	28	22	0	5	3	5
	08A□ -VL070-05																	
	08A□ -VL090-10	204 (251)	107	46	7	22	68	90		80	M6	12	36	28		6	3.5	6
	08A□ -VL090-25	226 (273)	129															
	08A□ -VL120-50	241.5 (288.5)	144.5	70	9	32	90	120		108	M8	16	58	45		10	5	8
400 V	08D□ -VL070-03	200.5 (247.5)	94	36	5	16	52	70	80	62	M5	10	28	22	0	5	3	5
	08D□ -VL070-05																	
	08A□ -VL090-10	213.5 (260.5)	107	46	7	22	68	90		80	M6	12	36	28		6	3.5	6
	08D□ -VL090-25	235.5 (282.5)	129															
	08D□ -VL120-50	251 (298)	144.5	70	9	32	90	120		108	M8	16	58	45		10	5	8
1.5 kW Models																		
200 V	15A□ -VL090-03	276 (317)	119	46	7	22	68	90	100	80	M6	12	36	28	0	6	3.5	6
	15A□ -VL090-05																	
	15A□ -VL090-10																	
	15A□ -VL090-25	313.5 (354.5)	156.5	70	9	32	90	120		108	M8	16	58	45		10	5	8
	15A□ -VL120-50																	

Note: The values in parentheses are for Servo Motors with Holding Brakes.

◆ Gear Motor Models: 2.0 to 4.4kW (S7A20, S7A25, S7A30, S7A40)

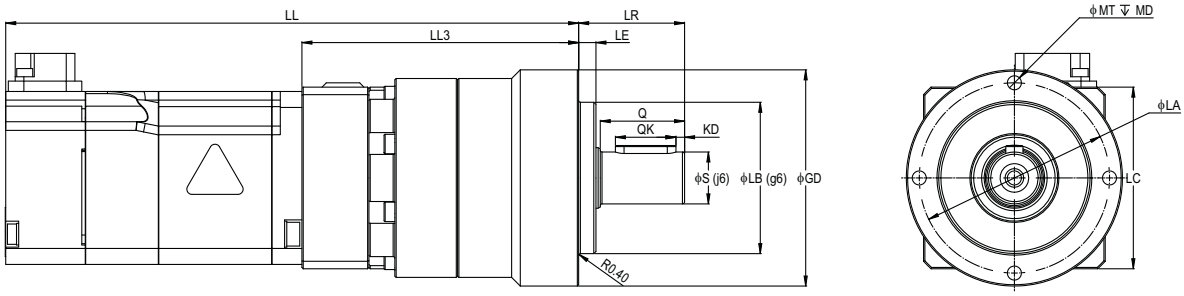

Shaft Detail (VL050 Models Only)

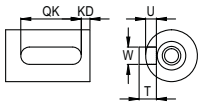

Shaft Detail (All Other Models)

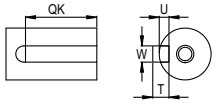

	Model S7A	LL	LL3	LR	LE	ϕS	ϕLB	ϕGD	LC	ϕLA	ϕMT	MD	Q	QK	KD	W	U	T
2.0 kW Models																		
200 V	20A□ -VL090-03	216 (263)	94	36	5	16	52	70	80	62	M5	10	28	22	0	5	3	5
	20A□ -VL090-05																	
	20A□ -VL120-10	229 (276)	107	46	7	22	68	90		80	M6	12	36	28		6	3.5	6
	20A□ -VL120-25	251 (298)	129															
	20A□ -VL155-50	266.5 (313.5)	144.5	70	9	32	90	120		108	M8	16	58	45		10	5	8
2.5 kW Models																		
200 V	25A□ -VL070-03	315 (366)	119	46	7	22	68	90	100	80	M6	12	36	28	0	6	3.5	6
	25A□ -VL070-05																	
	25A□ -VL090-10	325 (376)	129	70	9	32	90	120		108	M8	16	58	45		10	5	8
	25A□ -VL090-25	352.5 (403.5)	156.5															
	25A□ -VL120-50	377.5 (428.5)	181.5	97	12	40	120	155		140	M10	20	82	65		12		
3.0 kW Models																		
200 V	30A□ -VL090-03	318 (356)	124	46	7	22	68	90	130	80	M6	12	36	28	0	6	3.5	6
	30A□ -VL090-05																	
	30A□ -VL120-10	328 (366)	134	70	9	32	90	120		108	M8	16	58	45		10	5	8
	30A□ -VL120-25	355.5 (393.5)	161.5															
	30A□ -VL155-50	380.5 (418.5)	186.5	97	12	40	120	155		140	M10	20	82	65		12		
4.0 kW Models																		
200 V	40A□ -VL090-03	357 (393)	124	46	7	22	68	90	130	80	M6	12	36	28	0	6	3.5	6
	40A□ -VL090-05																	
	40A□ -VL120-10	367 (403)	134	70	9	32	90	120		108	M8	16	58	45		10	5	8
	40A□ -VL155-25	419.5 (455.5)	186.5	97	12	40	120	155		140	M10	20	82	65		12		
	40A□ -VL205-50	449 (485)	216	100	15	55	160	205		184	M12	22				16	6	10

Note: The values in parentheses are for Servo Motors with Holding Brakes. 7.0kW motors not available with brake.

◆ Gear Motor Models: 5.0 to 7.0kW (S7A50, S7A70)

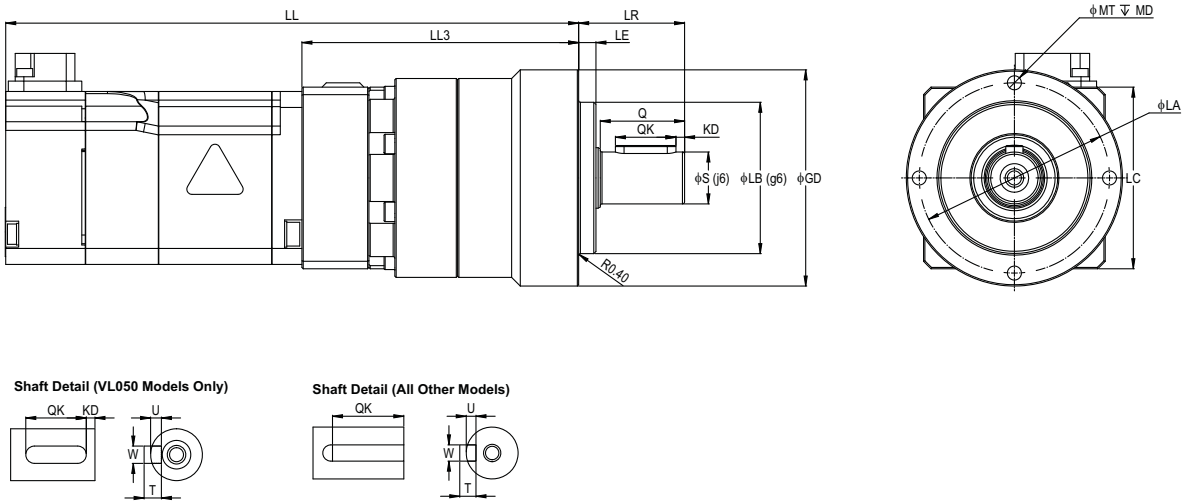

Shaft Detail (VL050 Models Only)

Shaft Detail (All Other Models)

Model S7A		LL	LL3	LR	LE	ϕS	ϕLB	ϕGD	LC	ϕLA	ϕMT	MD	Q	QK	KD	W	U	T
5.0 kW Models																		
200 V	50A□ -VL090-03	397 (433)	124	46	7	22	68	90	130	80	M6	12	36	28	0	6	3.5	6
	50A□ -VL090-05																	
	50A□ -VL155-10	425 (461)	152	97	12	40	120	155		140	M10	20	82	65		12	5	8
	50A□ -VL155-25	459.5 (495.5)	186.5															
	50A□ -VL205-50	489 (525)	216	100	15	55	160	205		184	M12	22				16	6	10
7.0 kW Models																		
200 V	70A□ -VL120-03	468	134	70	9	32	90	120	130	108	M8	16	58	45	0	10	5	8
	70A□ -VL120-05																	
	70A□ -VL155-10	486	152	97	12	40	120	155		140	M10	20	82	65		12		
	70A□ -VL205-25	550	216	100	15	55	160	205		184	M12	22				16	6	10
	70A□ -VL235-50	559.5	225.5	126	18	75	180	235		210	M16	28	105	85		20	7.5	12

Note: The values in parentheses are for Servo Motors with Holding Brakes. 7.0kW motors not available with brake.

Selecting Cables

◆ Cable Configurations

The cables shown below are required to connect a Servo Motor to a SERVOPACK.

Encoder Cable of 20 m or Less

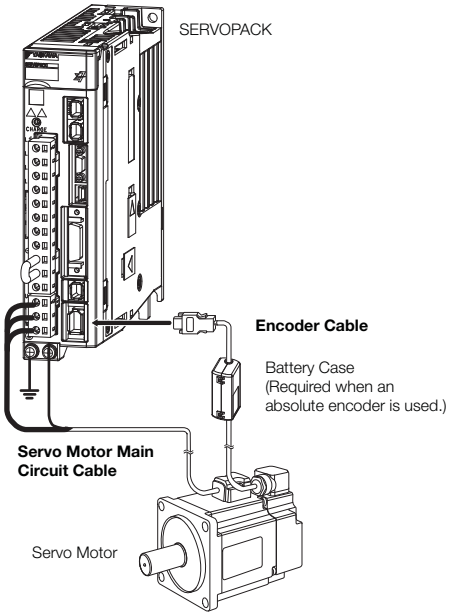

Encoder Cable of 30 m to 50 m (Relay Cable)

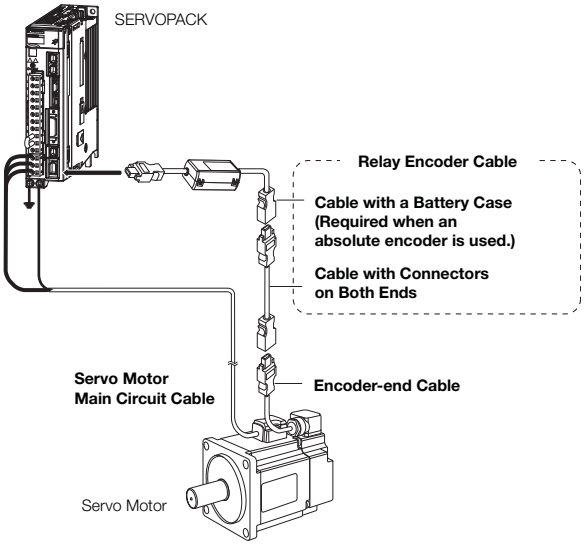

Note: 1. Cables with connectors on both ends that are compliant with an IP67 protective structure and European Safety Standards are not available from Yaskawa for the SGM7A-15A to SGM7A-30A Servo Motors. You must make such a cable yourself. Use the Connectors specified by Yaskawa for these Servo Motors. (These Connectors are compliant with the standards.) Yaskawa does not specify what wiring materials to use.

2. If the cable length exceeds 20 m, be sure to use a Relay Encoder Cable.
3. If you use a Servo Motor Main Circuit Cable that exceeds 20 m, the intermittent duty zone in the torque-motor speed characteristics will become smaller because the voltage drop increases.
4. Refer to the following manual for the following information.
   - Cable dimensional drawings and cable connection specifications
   - Order numbers and specifications of individual connectors for cables
   - Order numbers and specifications for wiring materials

   📖 *Σ-7-Series AC Servo Drive Peripheral Device Selection Manual* (Manual No.: SIEP S800001 32)

Important

For the following Servo Motor models, there are different order numbers for the Servo Motor Main Circuit Cables and Encoder Cables depending on the cable installation direction. Confirm the order numbers before you order.

- SGM7A models SGM7A-A5 to SGM7A-10

Cable Installed toward Load

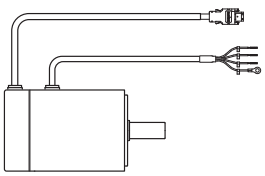

Cable Installed away from Load

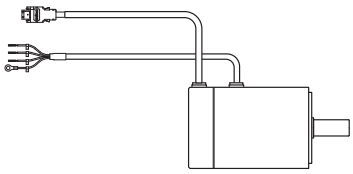

Servo Motor Main Circuit Cables (200 V Models)

Servo Motor Model	Name	Length (L)	Order Number			Appearance
			Standard Cable	Flexible Cable*	Flexible/Shielded	
SGM7A-A5 to -C2 50 W to 150 W (200V)	Power cable for Servo Motors without Holding Brakes Cable installed toward load	3 m	JZSP-C7M10F-03-E	JZSP-C7M12F-03-E	YAI-CSM21-03-P-E	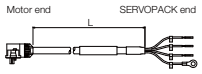
		5 m	JZSP-C7M10F-05-E	JZSP-C7M12F-05-E	YAI-CSM21-05-P-E	
		10 m	JZSP-C7M10F-10-E	JZSP-C7M12F-10-E	YAI-CSM21-10-P-E	
		15 m	JZSP-C7M10F-15-E	JZSP-C7M12F-15-E	YAI-CSM21-15-P-E	
		20 m	JZSP-C7M10F-20-E	JZSP-C7M12F-20-E	YAI-CSM21-20-P-E	
		30 m	JZSP-C7M10F-30-E	JZSP-C7M12F-30-E	YAI-CSM21-30-P-E	
		40 m	JZSP-C7M10F-40-E	JZSP-C7M12F-40-E	YAI-CSM21-40-P-E	
		50 m	JZSP-C7M10F-50-E	JZSP-C7M12F-50-E	YAI-CSM21-50-P-E	
SGM7A-02 to -06 200 W to 600 W (200V)		3 m	JZSP-C7M20F-03-E	JZSP-C7M22F-03-E	YAI-CSM22-03-P-E	
		5 m	JZSP-C7M20F-05-E	JZSP-C7M22F-05-E	YAI-CSM22-05-P-E	
		10 m	JZSP-C7M20F-10-E	JZSP-C7M22F-10-E	YAI-CSM22-10-P-E	
		15 m	JZSP-C7M20F-15-E	JZSP-C7M22F-15-E	YAI-CSM22-15-P-E	
		20 m	JZSP-C7M20F-20-E	JZSP-C7M22F-20-E	YAI-CSM22-20-P-E	
		30 m	JZSP-C7M20F-30-E	JZSP-C7M22F-30-E	YAI-CSM22-30-P-E	
		40 m	JZSP-C7M20F-40-E	JZSP-C7M22F-40-E	YAI-CSM22-40-P-E	
		50 m	JZSP-C7M20F-50-E	JZSP-C7M22F-50-E	YAI-CSM22-50-P-E	
SGM7A-08 and -10 750 W, 1.0 kW (200V)		3 m	JZSP-C7M30F-03-E	JZSP-C7M32F-03-E	YAI-CSM23-03-P-E	
		5 m	JZSP-C7M30F-05-E	JZSP-C7M32F-05-E	YAI-CSM23-05-P-E	
		10 m	JZSP-C7M30F-10-E	JZSP-C7M32F-10-E	YAI-CSM23-10-P-E	
		15 m	JZSP-C7M30F-15-E	JZSP-C7M32F-15-E	YAI-CSM23-15-P-E	
		20 m	JZSP-C7M30F-20-E	JZSP-C7M32F-20-E	YAI-CSM23-20-P-E	
		30 m	JZSP-C7M30F-30-E	JZSP-C7M32F-30-E	YAI-CSM23-30-P-E	
		40 m	JZSP-C7M30F-40-E	JZSP-C7M32F-40-E	YAI-CSM23-40-P-E	
		50 m	JZSP-C7M30F-50-E	JZSP-C7M32F-50-E	YAI-CSM23-50-P-E	
SGM7A-A5 to -C2 50 W to 150 W (200V)	Power cable for Servo Motors without Holding Brakes Cable installed away from load	3 m	JZSP-C7M10G-03-E	JZSP-C7M12G-03-E	N/A	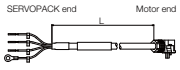
		5 m	JZSP-C7M10G-05-E	JZSP-C7M12G-05-E		
		10 m	JZSP-C7M10G-10-E	JZSP-C7M12G-10-E		
		15 m	JZSP-C7M10G-15-E	JZSP-C7M12G-15-E		
		20 m	JZSP-C7M10G-20-E	JZSP-C7M12G-20-E		
		30 m	JZSP-C7M10G-30-E	JZSP-C7M12G-30-E		
		40 m	JZSP-C7M10G-40-E	JZSP-C7M12G-40-E		
		50 m	JZSP-C7M10G-50-E	JZSP-C7M12G-50-E		
SGM7A-02 to -06 200 W to 600 W (200V)		3 m	JZSP-C7M20G-03-E	JZSP-C7M22G-03-E		
		5 m	JZSP-C7M20G-05-E	JZSP-C7M22G-05-E		
		10 m	JZSP-C7M20G-10-E	JZSP-C7M22G-10-E		
		15 m	JZSP-C7M20G-15-E	JZSP-C7M22G-15-E		
		20 m	JZSP-C7M20G-20-E	JZSP-C7M22G-20-E		
		30 m	JZSP-C7M20G-30-E	JZSP-C7M22G-30-E		
		40 m	JZSP-C7M20G-40-E	JZSP-C7M22G-40-E		
		50 m	JZSP-C7M20G-50-E	JZSP-C7M22G-50-E		
SGM7A-08 and -10 750 W, 1.0 kW (200V)		3 m	JZSP-C7M30G-03-E	JZSP-C7M32G-03-E		
		5 m	JZSP-C7M30G-05-E	JZSP-C7M32G-05-E		
		10 m	JZSP-C7M30G-10-E	JZSP-C7M32G-10-E		
		15 m	JZSP-C7M30G-15-E	JZSP-C7M32G-15-E		
		20 m	JZSP-C7M30G-20-E	JZSP-C7M32G-20-E		
		30 m	JZSP-C7M30G-30-E	JZSP-C7M32G-30-E		
		40 m	JZSP-C7M30G-40-E	JZSP-C7M32G-40-E		
		50 m	JZSP-C7M30G-50-E	JZSP-C7M32G-50-E		

Servo Motor Model	Name	Length (L)	Order Number			Appearance
			Standard Cable	Flexible Cable*	Flexible/Shielded	
SGM7A-A5 to -C2 50 W to 150 W (200V)	Power cable for Servo Motors with Holding Brakes Cable installed toward load	3 m	JZSP-C7M13F-03-E	JZSP-C7M14F-03-E	YAI-CSM31-03-P-E	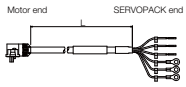
		5 m	JZSP-C7M13F-05-E	JZSP-C7M14F-05-E	YAI-CSM31-05-P-E	
		10 m	JZSP-C7M13F-10-E	JZSP-C7M14F-10-E	YAI-CSM31-10-P-E	
		15 m	JZSP-C7M13F-15-E	JZSP-C7M14F-15-E	YAI-CSM31-15-P-E	
		20 m	JZSP-C7M13F-20-E	JZSP-C7M14F-20-E	YAI-CSM31-20-P-E	
		30 m	JZSP-C7M13F-30-E	JZSP-C7M14F-30-E	YAI-CSM31-30-P-E	
		40 m	JZSP-C7M13F-40-E	JZSP-C7M14F-40-E	YAI-CSM31-40-P-E	
		50 m	JZSP-C7M13F-50-E	JZSP-C7M14F-50-E	YAI-CSM31-50-P-E	
SGM7A-02 to -06 200 W to 600 W (200V)		3 m	JZSP-C7M23F-03-E	JZSP-C7M24F-03-E	YAI-CSM32-03-P-E	
		5 m	JZSP-C7M23F-05-E	JZSP-C7M24F-05-E	YAI-CSM32-05-P-E	
		10 m	JZSP-C7M23F-10-E	JZSP-C7M24F-10-E	YAI-CSM32-10-P-E	
		15 m	JZSP-C7M23F-15-E	JZSP-C7M24F-15-E	YAI-CSM32-15-P-E	
		20 m	JZSP-C7M23F-20-E	JZSP-C7M24F-20-E	YAI-CSM32-20-P-E	
		30 m	JZSP-C7M23F-30-E	JZSP-C7M24F-30-E	YAI-CSM32-30-P-E	
		40 m	JZSP-C7M23F-40-E	JZSP-C7M24F-40-E	YAI-CSM32-40-P-E	
		50 m	JZSP-C7M23F-50-E	JZSP-C7M24F-50-E	YAI-CSM32-50-P-E	
SGM7A-08 and -10 750 W, 1.0 kW (200V)		3 m	JZSP-C7M33F-03-E	JZSP-C7M34F-03-E	YAI-CSM33-03-P-E	
		5 m	JZSP-C7M33F-05-E	JZSP-C7M34F-05-E	YAI-CSM33-05-P-E	
		10 m	JZSP-C7M33F-10-E	JZSP-C7M34F-10-E	YAI-CSM33-10-P-E	
		15 m	JZSP-C7M33F-15-E	JZSP-C7M34F-15-E	YAI-CSM33-15-P-E	
		20 m	JZSP-C7M33F-20-E	JZSP-C7M34F-20-E	YAI-CSM33-20-P-E	
		30 m	JZSP-C7M33F-30-E	JZSP-C7M34F-30-E	YAI-CSM33-30-P-E	
		40 m	JZSP-C7M33F-40-E	JZSP-C7M34F-40-E	YAI-CSM33-40-P-E	
		50 m	JZSP-C7M33F-50-E	JZSP-C7M34F-50-E	YAI-CSM33-50-P-E	
SGM7A-A5 to -C2 50 W to 150 W (200V)	Power cable for Servo Motors with Holding Brakes Cable installed away from load	3 m	JZSP-C7M13G-03-E	JZSP-C7M14G-03-E	N/A	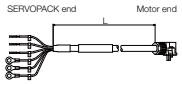
		5 m	JZSP-C7M13G-05-E	JZSP-C7M14G-05-E		
		10 m	JZSP-C7M13G-10-E	JZSP-C7M14G-10-E		
		15 m	JZSP-C7M13G-15-E	JZSP-C7M14G-15-E		
		20 m	JZSP-C7M13G-20-E	JZSP-C7M14G-20-E		
		30 m	JZSP-C7M13G-30-E	JZSP-C7M14G-30-E		
		40 m	JZSP-C7M13G-40-E	JZSP-C7M14G-40-E		
		50 m	JZSP-C7M13G-50-E	JZSP-C7M14G-50-E		
SGM7A-02 to -06 200 W to 600 W (200V)		3 m	JZSP-C7M23G-03-E	JZSP-C7M24G-03-E		
		5 m	JZSP-C7M23G-05-E	JZSP-C7M24G-05-E		
		10 m	JZSP-C7M23G-10-E	JZSP-C7M24G-10-E		
		15 m	JZSP-C7M23G-15-E	JZSP-C7M24G-15-E		
		20 m	JZSP-C7M23G-20-E	JZSP-C7M24G-20-E		
		30 m	JZSP-C7M23G-30-E	JZSP-C7M24G-30-E		
		40 m	JZSP-C7M23G-40-E	JZSP-C7M24G-40-E		
		50 m	JZSP-C7M23G-50-E	JZSP-C7M24G-50-E		
SGM7A-08 and -10 750 W, 1.0 kW (200V)		3 m	JZSP-C7M33G-03-E	JZSP-C7M34G-03-E		
		5 m	JZSP-C7M33G-05-E	JZSP-C7M34G-05-E		
		10 m	JZSP-C7M33G-10-E	JZSP-C7M34G-10-E		
		15 m	JZSP-C7M33G-15-E	JZSP-C7M34G-15-E		
		20 m	JZSP-C7M33G-20-E	JZSP-C7M34G-20-E		
		30 m	JZSP-C7M33G-30-E	JZSP-C7M34G-30-E		
		40 m	JZSP-C7M33G-40-E	JZSP-C7M34G-40-E		
		50 m	JZSP-C7M33G-50-E	JZSP-C7M34G-50-E		

* Use Flexible Cables for moving parts of machines, such as robots.

Servo Motor Model	Name	Length (L)	Order Number			Appearance
			Standard Cable	Flexible Cable*	Flexible/Shielded	
SGM7A-15 to -25 1.5 to 2.5 kW (200V)	Power cable for Servo Motors Cable installed toward load	3 m	B1EV-03(A)-E	N/A	B1EP-03(A)-E	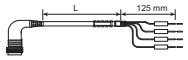
		5 m	B1EV-05(A)-E	N/A	B1EP-05(A)-E	
		10 m	B1EV-10(A)-E	N/A	B1EP-10(A)-E	
		15 m	B1EV-15(A)-E	N/A	B1EP-15(A)-E	
		20 m	B1EV-20(A)-E	N/A	B1EP-20(A)-E	
SGM7A-30 3.0 kW (200V)		3 m	B3EV-03(A)-E	N/A	B3EP-03(A)-E	
		5 m	B3EV-05(A)-E	N/A	B3EP-05(A)-E	
		10 m	B3EV-10(A)-E	N/A	B3EP-10(A)-E	
		15 m	B3EV-15(A)-E	N/A	B3EP-15(A)-E	
		20 m	B3EV-20(A)-E	N/A	B3EP-20(A)-E	
SGM7A-40 to -70 4.0 to 7.0 kW (200V)		3 m	B4EV-03(A)-E	N/A	B4EP-03(A)-E	
		5 m	B4EV-05(A)-E	N/A	B4EP-05(A)-E	
		10 m	B4EV-10(A)-E	N/A	B4EP-10(A)-E	
		15 m	B4EV-15(A)-E	N/A	B4EP-15(A)-E	
		20 m	B4EV-20(A)-E	N/A	B4EP-20(A)-E	
SGM7A-15 to -50 1.5 to 5.0 kW (200V)	Brake cable for Servo Motors with Holding Brakes Cable installed toward load **	3 m	BBEV-03(A)-E	N/A	BBEP-03(A)-E	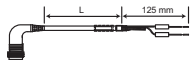
		5 m	BBEV-05(A)-E	N/A	BBEP-05(A)-E	
		10 m	BBEV-10(A)-E	N/A	BBEP-10(A)-E	
		15 m	BBEV-15(A)-E	N/A	BBEP-15(A)-E	
		20 m	BBEV-20(A)-E	N/A	BBEP-20(A)-E	
SGM7A-70 7.0kW (200V)	Fan Cable (required)	3 m	BFEV-03(A)-E	N/A	N/A	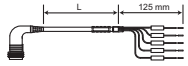
		5 m	BFEV-05(A)-E	N/A	N/A	
		10 m	BFEV-10(A)-E	N/A	N/A	
		15 m	BFEV-15(A)-E	N/A	N/A	
		20 m	BFEV-20(A)-E	N/A	N/A	

* Use Flexible Cables for moving parts of machines, such as robots.

** Note: Both a power cable and a separate brake cable are required for motors with holding brakes. Use brake cable shown along with the power cables designated for motors without holding brakes.

Servo Motor Main Circuit Cables (400 V Models)

Servo Motor Model	Name	Length (L)	Order Number			Appearance
			Standard	Flexible	Flexible/Shielded	
SGM7A-02 to -08 200W to 750 W (400V)	Power Cable without Brake. Cable installed toward load	3 m	N/A	N/A	JZSP-C7M143-03-E-G6	
		5 m	N/A	N/A	JZSP-C7M143-05-E-G6	
		10 m	N/A	N/A	JZSP-C7M143-10-E-G6	
		15 m	N/A	N/A	JZSP-C7M143-15-E-G6	
		20 m	N/A	N/A	JZSP-C7M143-20-E-G6	
SGM7A-10 to -25 1.0 to 2.5kW (400V)		3 m	N/A	N/A	JZSP-C7M144-03-E-G6	
		5 m	N/A	N/A	JZSP-C7M144-05-E-G6	
		10 m	N/A	N/A	JZSP-C7M144-10-E-G6	
		15 m	N/A	N/A	JZSP-C7M144-15-E-G6	
		20 m	N/A	N/A	JZSP-C7M144-20-E-G6	
SGM7A-30 3.0kW (400V)		3 m	N/A	N/A	JZSP-C7M154-03-E-G6	
		5 m	N/A	N/A	JZSP-C7M154-05-E-G6	
		10 m	N/A	N/A	JZSP-C7M154-10-E-G6	
		15 m	N/A	N/A	JZSP-C7M154-15-E-G6	
		20 m	N/A	N/A	JZSP-C7M154-20-E-G6	
SGM7A-40 to -50 4.0 to 5.0kW (400V)		3 m	N/A	N/A	JZSP-C7M164-03-E-G6	
		5 m	N/A	N/A	JZSP-C7M164-05-E-G6	
		10 m	N/A	N/A	JZSP-C7M164-10-E-G6	
		15 m	N/A	N/A	JZSP-C7M164-15-E-G6	
		20 m	N/A	N/A	JZSP-C7M164-20-E-G6	
SGM7A-70 7.0kW (400V)		3 m	N/A	N/A	JZSP-C7M175-03-E-G6	
		5 m	N/A	N/A	JZSP-C7M175-05-E-G6	
		10 m	N/A	N/A	JZSP-C7M175-10-E-G6	
		15 m	N/A	N/A	JZSP-C7M175-15-E-G6	
		20 m	N/A	N/A	JZSP-C7M175-20-E-G6	
SGM7A-02 to -08 200W to 750 W (400V)	Power Cable with Brake. Cable installed toward load	3 m	N/A	N/A	JZSP-C7M343-03-E-G6	
		5 m	N/A	N/A	JZSP-C7M343-05-E-G6	
		10 m	N/A	N/A	JZSP-C7M343-10-E-G6	
		15 m	N/A	N/A	JZSP-C7M343-15-E-G6	
		20 m	N/A	N/A	JZSP-C7M343-20-E-G6	
SGM7A-10 to -25 1.0 to 2.5kW (400V)		3 m	N/A	N/A	JZSP-C7M344-03-E-G6	
		5 m	N/A	N/A	JZSP-C7M344-05-E-G6	
		10 m	N/A	N/A	JZSP-C7M344-10-E-G6	
		15 m	N/A	N/A	JZSP-C7M344-15-E-G6	
		20 m	N/A	N/A	JZSP-C7M344-20-E-G6	
SGM7A-30 3.0kW (400V)		3 m	N/A	N/A	JZSP-C7M354-03-E-G6	
		5 m	N/A	N/A	JZSP-C7M354-05-E-G6	
		10 m	N/A	N/A	JZSP-C7M354-10-E-G6	
		15 m	N/A	N/A	JZSP-C7M354-15-E-G6	
		20 m	N/A	N/A	JZSP-C7M354-20-E-G6	
SGM7A-40 to -50 4.0 to 5.0kW (400V)		3 m	N/A	N/A	JZSP-C7M364-03-E-G6	
		5 m	N/A	N/A	JZSP-C7M364-05-E-G6	
		10 m	N/A	N/A	JZSP-C7M364-10-E-G6	
		15 m	N/A	N/A	JZSP-C7M364-15-E-G6	
		20 m	N/A	N/A	JZSP-C7M364-20-E-G6	
SGM7A-70 7.0kW (400V)		3 m	N/A	N/A	JZSP-C7M375-03-E-G6	
		5 m	N/A	N/A	JZSP-C7M375-05-E-G6	
		10 m	N/A	N/A	JZSP-C7M375-10-E-G6	
		15 m	N/A	N/A	JZSP-C7M375-15-E-G6	
		20 m	N/A	N/A	JZSP-C7M375-20-E-G6	

Servo Motor Model	Name	Length (L)	Order Number			Appearance
			Standard	Flexible	Flexible/Shielded	
SGM7A-70 7.0kW (400V)	Fan Cable (required)	3 m	N/A	N/A	JZSP-C7M343-03-E-G6	
		5 m	N/A	N/A	JZSP-C7M343-05-E-G6	
		10 m	N/A	N/A	JZSP-C7M343-10-E-G6	
		15 m	N/A	N/A	JZSP-C7M343-15-E-G6	
		20 m	N/A	N/A	JZSP-C7M343-20-E-G6	

Servo Motor Connection Shielding Clamp (400 V Models)

Servo Motor Model	Name	Order Number	Appearance
SGM7A-02 to -30 200W to 3.0 kW (400V)	Shielding Clamp for Power Cable	KLBUE 4-13.5_SC	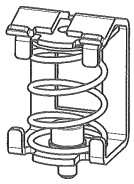
SGM7A-50 to -70 5.0 to 7.0kW (400V)		KLBUE 10-20_SC	

Encoder Cables of 20 m or Less (200V Models)

Servo Motor Model	Name	Length (L)	Order Number		Appearance
			Standard Cable	Flexible Cable*1	
SGM7A-A5 to -10 50 W to 1.0 kW	For incremental encoder Cable installed toward load	3 m	JZSP-C7PI0D-03-E	JZSP-C7PI2D-03-E	
		5 m	JZSP-C7PI0D-05-E	JZSP-C7PI2D-05-E	
		10 m	JZSP-C7PI0D-10-E	JZSP-C7PI2D-10-E	
		15 m	JZSP-C7PI0D-15-E	JZSP-C7PI2D-15-E	
		20 m	JZSP-C7PI0D-20-E	JZSP-C7PI2D-20-E	
	For incremental encoder Cable installed away from load	3 m	JZSP-C7PI0E-03-E	JZSP-C7PI2E-03-E	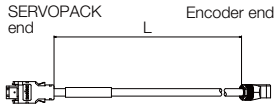
		5 m	JZSP-C7PI0E-05-E	JZSP-C7PI2E-05-E	
		10 m	JZSP-C7PI0E-10-E	JZSP-C7PI2E-10-E	
		15 m	JZSP-C7PI0E-15-E	JZSP-C7PI2E-15-E	
		20 m	JZSP-C7PI0E-20-E	JZSP-C7PI2E-20-E	
	For absolute encoder: With Battery Case*2 Cable installed toward load	3 m	JZSP-C7PA0D-03-E	JZSP-C7PA2D-03-E	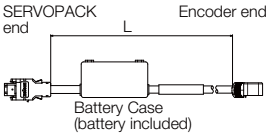
		5 m	JZSP-C7PA0D-05-E	JZSP-C7PA2D-05-E	
		10 m	JZSP-C7PA0D-10-E	JZSP-C7PA2D-10-E	
		15 m	JZSP-C7PA0D-15-E	JZSP-C7PA2D-15-E	
		20 m	JZSP-C7PA0D-20-E	JZSP-C7PA2D-20-E	
	For absolute encoder: With Battery Case*2 Cable installed away from load	3 m	JZSP-C7PA0E-03-E	JZSP-C7PA2E-03-E	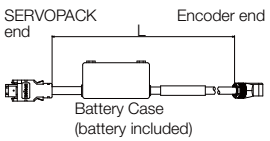
		5 m	JZSP-C7PA0E-05-E	JZSP-C7PA2E-05-E	
		10 m	JZSP-C7PA0E-10-E	JZSP-C7PA2E-10-E	
		15 m	JZSP-C7PA0E-15-E	JZSP-C7PA2E-15-E	
		20 m	JZSP-C7PA0E-20-E	JZSP-C7PA2E-20-E	

Servo Motor Model	Name	Length (L)	Order Number		Appearance
			Standard Cable	Flexible Cable*1	
SGM7A-15 to -70 1.5 kW to 7.0 kW	For incremental encoder	3 m	JZSP-CVP01-03-E	JZSP-CVP11-03-E	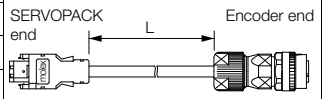
		5 m	JZSP-CVP01-05-E	JZSP-CVP11-05-E	
		10 m	JZSP-CVP01-10-E	JZSP-CVP11-10-E	
		15 m	JZSP-CVP01-15-E	JZSP-CVP11-15-E	
		20 m	JZSP-CVP01-20-E	JZSP-CVP11-20-E	
		3 m	JZSP-CVP02-03-E	JZSP-CVP12-03-E	
		5 m	JZSP-CVP02-05-E	JZSP-CVP12-05-E	
		10 m	JZSP-CVP02-10-E	JZSP-CVP12-10-E	
		15 m	JZSP-CVP02-15-E	JZSP-CVP12-15-E	
		20 m	JZSP-CVP02-20-E	JZSP-CVP12-20-E	
	For absolute encoder: With Battery Case*2	3 m	JZSP-CVP06-03-E	JZSP-CVP26-03-E	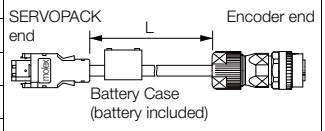
		5 m	JZSP-CVP06-05-E	JZSP-CVP26-05-E	
		10 m	JZSP-CVP06-10-E	JZSP-CVP26-10-E	
		15 m	JZSP-CVP06-15-E	JZSP-CVP26-15-E	
		20 m	JZSP-CVP06-20-E	JZSP-CVP26-20-E	
		3 m	JZSP-CVP07-03-E	JZSP-CVP27-03-E	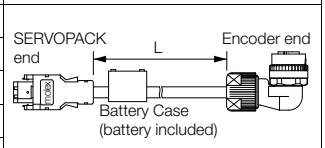
		5 m	JZSP-CVP07-05-E	JZSP-CVP27-05-E	
		10 m	JZSP-CVP07-10-E	JZSP-CVP27-10-E	
		15 m	JZSP-CVP07-15-E	JZSP-CVP27-15-E	
		20 m	JZSP-CVP07-20-E	JZSP-CVP27-20-E	

*1. Use Flexible Cables for moving parts of machines, such as robots.

*2. If a battery is connected to host controller, the Battery Case is not required. If so, use a cable for incremental encoders.

Encoder Cables of 20 m or Less (400V Models)

Servo Motor Model	Name	Length (L)	Order Number		Appearance
			For Absolute encoder	For Incremental encoder	
SGM7J-02 to -15 (200 W to 1.5 kW)	Flexible cable with straight connector (M12)	3 m	JZSP-C7PA2M-03-E	JZSP-C7PI2M-03-E-G6	
		5 m	JZSP-C7PA2M-05-E	JZSP-C7PI2M-03-E-G6	
		10 m	JZSP-C7PA2M-10-E	JZSP-C7PI2M-03-E-G6	
		15 m	JZSP-C7PA2M-15-E	JZSP-C7PI2M-03-E-G6	
		20 m	JZSP-C7PA2M-20-E	JZSP-C7PI2M-03-E-G6	
SGM7J-02 to -15 (200 W to 1.5 kW)	Flexible cable with right angle connector (M12)	3 m	JZSP-C7PA2N-03-E-G6	JZSP-C7PI2N-03-E-G6	
		5 m	JZSP-C7PA2N-05-E-G6	JZSP-C7PI2N-05-E-G6	
		10 m	JZSP-C7PA2N-10-E-G6	JZSP-C7PI2N-10-E-G6	
		15 m	JZSP-C7PA2N-15-E-G6	JZSP-C7PI2N-15-E-G6	
		20 m	JZSP-C7PA2N-20-E-G6	JZSP-C7PI2N-20-E-G6	

Relay Encoder Cable of 30 m to 50 m

Servo Motor Model	Name	Length (L)	Order Number	Appearance
SGM7A-A5 to -10 50 W to 1.0 kW	Encoder-end Cable (for incremental or absolute encoder) Cable installed toward load	0.3 m	JZSP-C7PRCD-E	
	Encoder-end Cable (for incremental or absolute encoder) Cable installed away from load	0.3 m	JZSP-C7PRCE-E	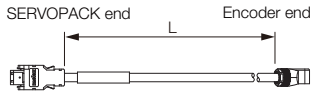
	Cables with Connectors on Both Ends (for incremental or absolute encoder)	30 m	JZSP-UCMP00-30-E	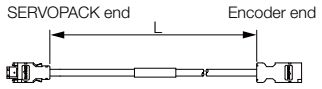
		40 m	JZSP-UCMP00-40-E	
		50 m	JZSP-UCMP00-50-E	
	Cable with a Battery Case (Required when an absolute encoder is used.*)	0.3 m	JZSP-CSP12-E-G5	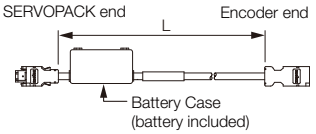
SGM7A-15 to -70 1.5 kW to 7.0 kW	Encoder-end Cable (for incremental or absolute encoder)	0.3 m	JZSP-CVP01-E	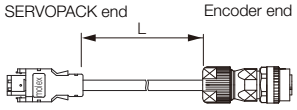
			JZSP-CVP02-E	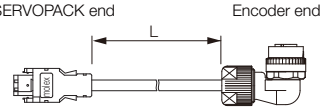
	Cables with Connectors on Both Ends (for incremental or absolute encoder)	30 m	JZSP-UCMP00-30-E	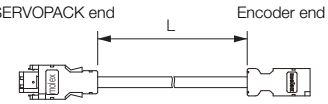
		40 m	JZSP-UCMP00-40-E	
		50 m	JZSP-UCMP00-50-E	
	Cable with a Battery Case (Required when an absolute encoder is used.*)	0.3 m	JZSP-CSP12-E-G5	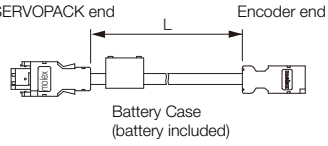

* This Cable is not required if a battery is connected to the host controller.

Connector Specifications (200 V Models)

◆ SGM7A-15 to -50 without Holding Brakes

• Encoder Connector Specifications (24-bit Encoder)

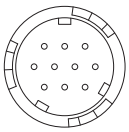

Receptacle: CM10-R10P-D
Applicable plug: Not provided by Yaskawa.
Plug: CM10-AP10S-☐ -D for Right-angle Plug
CM10-SP10S-☐ -D for Straight Plug
(☐ depends on the applicable cable size.)
Manufacturer: DDK Ltd.

• Servo Motor Connector Specifications

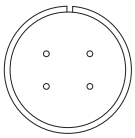

Manufacturer: DDK Ltd.

◆ SGM7A-70 without Holding Brakes

• Encoder Connector Specifications (24-bit Encoder)

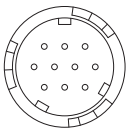

Receptacle: CM10-R10P-D
Applicable plug: Not provided by Yaskawa.
Plug: CM10-AP10S-☐ -D for Right-angle Plug
CM10-SP10S-☐ -D for Straight Plug
(☐ depends on the applicable cable size.)
Manufacturer: DDK Ltd.

• Servo Motor Connector Specifications

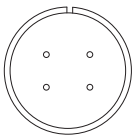

Manufacturer: DDK Ltd.

• **Fan Connector Specifications**

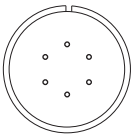

Receptacle: MS3102A14S-6P
Applicable Plug
Plug:MS3108B14S-6S
Cable Clamp: MS3057-6A

Note: The Servo Motor Connector (receptacle) is RoHS compliant.
Contact the connector manufacturer for RoHS-compliant cable-side connectors (not provided by Yaskawa).

◆ SGM7A-15 to -50 with Holding Brakes

• Encoder Connector Specifications (24-bit Encoder)

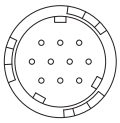

Receptacle: CM10-R10P-D
Applicable plug: Not provided by Yaskawa.
Plug: CM10-AP10S-☐ -D for Right-angle Plug
CM10-SP10S-☐ -D for Straight Plug
(☐ depends on the applicable cable size.)
Manufacturer: DDK Ltd.

• Servo Motor Connector Specifications

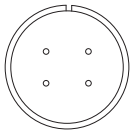

Manufacturer: DDK Ltd.

• Brake Connector Specifications

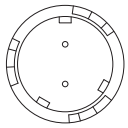

Receptacle: CM10-R2P-D
Applicable plug: Not provided by Yaskawa.
Plug: CM10-AP2S-☐ -D for Right-angle Plug
CM10-SP2S-☐ -D for Straight Plug
(☐ depends on the applicable cable size.)
Manufacturer: DDK Ltd.

Connector Specifications (400 V Models)

◆ SGM7A-02 to -50

• Encoder Connector Specifications

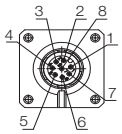

Receptacle
Size: M12
Part number: 1419959
Model: SACC-MSQ-M12MS-25-3,2 SCO
Manufacturer: Phoenix Contact

1	PG 5V
2	PG 0V
3	FG
4	BAT (+)
5	BAT (-)
6	Data (+)
7	Data (-)
8	Empty
Housing	Shield

• Servo Motor Connector Specifications

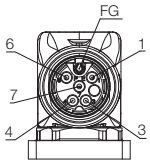

Receptacle
Size: M17
Part number: 1620448
Model: ST-5EP1N8AA500S
Manufacturer: Phoenix Contact

1	(Brake)
3	U
4	V
5	Empty
6	(Brake)
7	W
FG	FG
Housing	Shield

• Servo Motor Connector Specifications

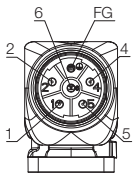

Receptacle
Size: M23
Part number: 1617905
Model: ST-5EP1N8AAD00S
Manufacturer: Phoenix Contact

1	V
2	(Brake)
4	(Brake)
5	U
6	W
FG	FG
Housing	Shield

• Servo Motor Connector Specifications

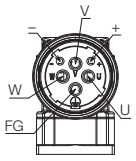

Receptacle
Size: M40
Part number: 1607927
Model: SM-5EPWN8AAD00S
Manufacturer: Phoenix Contact

U	U
V	V
W	W
+	Empty
-	Empty
FG	FG
Housing	Shield

• Servo Motor Connector Specifications

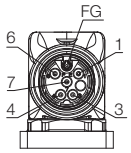

Receptacle
Size: M17
Part number: 1620448
Model: ST-5EP1N8AA500S
Manufacturer: Phoenix Contact

1	ALARM TERMINAL
3	FAN MOTOR
4	FAN MOTOR
6	ALARM TERMINAL
7	Empty
FG	FG
Housing	Shield

Servo Motor Connector Rotational Angle (400 V)

SGM7A-02 to -10

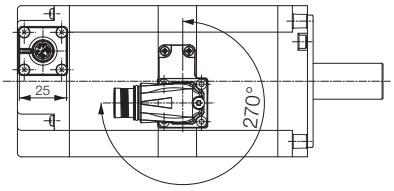

SGM7A-15 to -25

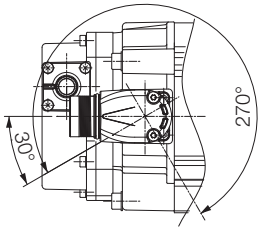

SGM7A-30 to -50

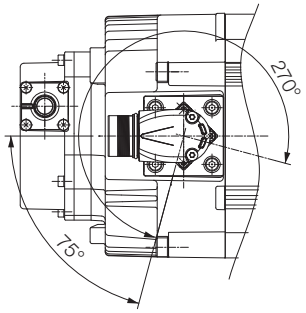

SGM7A-70

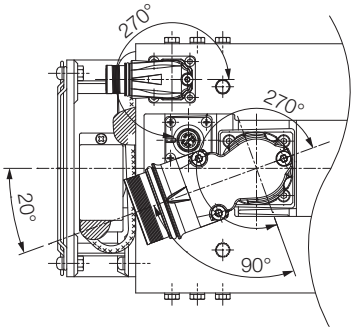

Allowable number of rotations: 10

SGM7P Servo Motors (without Gear Box)

Model Designations

SGM7P - 01 A 7 J 6 1 □

Σ-7 Series Servo Motors: SGM7P	1st+2nd digits	3rd digit	4th digit	5th digit	6th digit	7th digit	8th digit

1st+2nd digits Rated Output

Code	Specification
01	100 W
02	200 W
04	400 W
08	750 W
15	1.5 kW

3rd digit Power Supply Voltage

Code	Specification
A	200 VAC

4th digit Serial Encoder

Code	Specification
7	24-bit absolute
F	24-bit incremental

5th digit Design Revision Order

Code	Specification
J	IP67 (01, 02, and 04 Models)
E	IP67 (08 and 15 Models)

6th digit Shaft End

Code	Specification
2	Straight without key
6	Straight with key and tap

7th digit Options

Code	Specification
1	Without options
C	With holding brake (24 VDC)
E	With oil seal and holding brake (24 VDC)
S	With oil seal

8th digit Connector Specification

Code	Specification
Blank	Standard (01, 02, 04 Models)
D	Interconnectron (08, 15 Models)

■ Non Stock Items

SGM7P Gear Motors

The SGM7P gear motor product family pairs SGM7P servo motors with high precision, low backlash inline planetary gear heads resulting in a portfolio of rotary actuators fit for a wide range of applications. The family of gear motors has been thoroughly tested and adheres to the high levels of quality and performance expected from Yaskawa.

The high precision gear heads offer a variety of application advantages:

- ① **Quiet operation** – helical cut gears contribute toward reduced vibration and noise
- ② **High precision** – a standard backlash of 5 arc-min make this gear head ideal for the most accurate applications
- ③ **High rigidity and torque capacity** – achieved with a design which incorporates uncaged needle roller bearings
- ④ **Optimized adapter bushing** – minimizes inertia allowing for more output torque to be realized
- ⑤ **No leakage through the seal** – high viscosity, anti-separation grease does not liquefy and does not migrate away from the gears
- **Maintenance-free** – no need to replace the grease for the life of the unit. The reducer can be positioned in any orientation

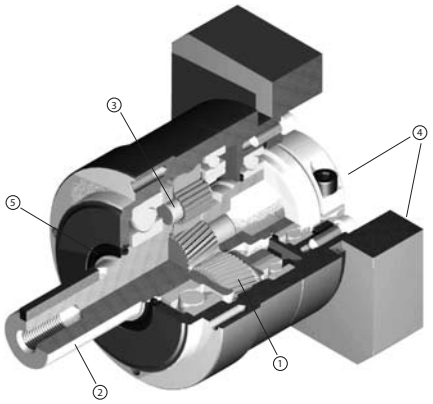

Model Designations

S7P 01 A C - VL 050 - 05

Σ-7 Series Gear Motors: SGM7P	1st+2nd digits	3rd digit	4th digit	5th digit	6th digit	7th digit

1st+2nd digits Rated Output

Code	Specification
01	100 W
02	200 W
04	400 W
08	750 W
15	1.5 kW

3rd digit Power Supply Voltage

Code	Specification
A	200 VAC

4th digit Brake Option

Code	Specification
Blank	No brake
C	24 V Brake

5th digit Gear box backlash

Code	Specification
VL	5 arc-min backlash

6th digit Gear head frame size

Code	Specification
050	50 mm
070	70 mm
090	90 mm
120	120 mm

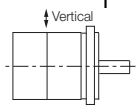

Shock Applied to the Servo Motor

7th digit Gear Ratio

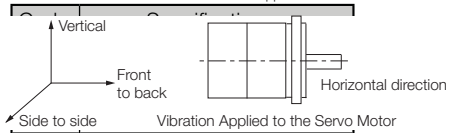

Vibration Applied to the Servo Motor

25	25:1 Ratio
50	50:1 Ratio

Specifications and Ratings

Specifications

Voltage		200 V				
Model SGM7P-		01A	02A	04A	08A	15A
Time Rating		Continuous				
Thermal Class		UL: B, CE: B				
Insulation Resistance		500 VDC, 10 MΩ min.				
Withstand Voltage		1,500 VAC for 1 minute				
Excitation		Permanent magnet				
Mounting		Flange-mounted				
Drive Method		Direct drive				
Rotation Direction		Counterclockwise (CCW) for forward reference when viewed from the load side				
Vibration Class*1		V15				
Environmental Conditions	Surrounding Air Temperature	0°C to 40°C (With derating, usage is possible between 40°C and 60°C.)*4				
	Surrounding Air Humidity	20% to 80% relative humidity (with no condensation)				
	Installation Site	• Must be indoors and free of corrosive and explosive gases. • Must be well-ventilated and free of dust and moisture. • Must facilitate inspection and cleaning. • Must have an altitude of 1,000 m or less. (With derating, usage is possible between 1,000 m and 2,000 m.)*5 • Must be free of strong magnetic fields.				
	Storage Environment	Store the Servo Motor in the following environment if you store it with the power cable disconnected. Storage Temperature: -20°C to 60°C (with no freezing) Storage Humidity: 20% to 80% relative humidity (with no condensation)				
Shock Resistance*2	Impact Acceleration Rate at Flange	490 m/s^2				
	Number of Impacts	2 times				
Vibration Resistance*3	Vibration Acceleration Rate at Flange	49 m/s^2				
Applicable SERVOPACKs	SGD7S-	R90A	2R8A		5R5A	120A
	SGD7W-	1R6A*6, 2R8A*6	2R8A, 5R5A*6, 7R6A*6		5R5A, 7R6A	–

*1. A vibration class of V15 indicates a vibration amplitude of 15 μm maximum on the Servo Motor without a load at the rated motor speed.

*2. The shock resistance for shock in the vertical direction when the Servo Motor is mounted with the shaft in a horizontal position is given in the above table.

*3. The vertical, side-to-side, and front-to-back vibration resistance for vibration in three directions when the Servo Motor is mounted with the shaft in a horizontal position is given in the above table. The strength of the vibration that the Servo Motor can withstand depends on the application. Always check the vibration acceleration rate that is applied to the Servo Motor with the actual equipment.

*4. If the surrounding air temperature will exceed 40°C, refer to the following section.
☞ **Applications Where the Surrounding Air Temperature of the Servo Motor Exceeds 40°C (page 114)**

*5. If the altitude will exceed 1,000 m, refer to the following section.
☞ **Applications Where the Altitude of the Servo Motor Exceeds 1,000 m (page 115)**

*6. If you use the Servo Motor together with a S-7W SERVOPACK, the control gain may not increase as much as with a S-7S SERVOPACK and other performances may be lower than those achieved with a S-7S SERVOPACK.

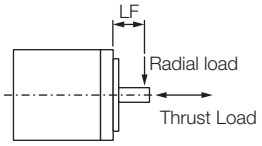

Ratings of Servo Motors

Voltage			200 V				
Model SGM7P-			01A	02A	04A	08A	15A
Rated Output[*1]		W	100	200	400	750	1500
Rated Torque[*1, *2]		N•m	0.318	0.637	1.27	2.39	4.77
Instantaneous Maximum Torque[*1]		N•m	0.955	1.91	3.82	7.16	14.3
Rated Current[*1]		Arms	0.86	2.0	2.6	5.4	9.2
Instantaneous Maximum Current[*1]		Arms	2.8	6.4	8.4	16.5	28.0
Rated Motor Speed[*1]		min^{-1}	3000				
Maximum Motor Speed[*1]		min^{-1}	6000				
Torque Constant		N•m/Arms	0.401	0.355	0.524	0.476	0.559
Motor Moment of Inertia		$\times 10^{-4}$ kg•m^2	0.0592 (0.0892)	0.263 (0.415)	0.409 (0.561)	2.10 (2.98)	4.02 (4.90)
Rated Power Rate[*1]		kW/s	17.1 (11.3)	15.4 (9.7)	39.6 (28.8)	27.2 (19.1)	56.6 (46.4)
Rated Angular Acceleration Rate[*1]		rad/s^2	53700 (35600)	24200 (15300)	31100 (22600)	11400 (8020)	11900 (9730)
Derating Rate for Servo Motor with Oil Seal		%	90		95		
Heat Sink Size		mm	250 × 250 × 6			300 × 300 × 12	
Protective Structure[*3]			Totally enclosed, self-cooled, IP65				
Holding Brake Specifications[*4]	Rated Voltage	V	24 VDC ±10%				
	Capacity	W	6	7.4		7.5	
	Holding Torque	N•m	0.318	0.637	1.27	2.39	4.77
	Coil Resistance	Ω (at 20°C)	96	84.5		76.8	
	Rated Current	A (at 20°C)	0.25	0.31		0.31	
	Time Required to Release Brake	ms	80				
	Time Required to Brake	ms	100				
Allowable Load Moment of Inertia (Motor Moment of Inertia Ratio)			25 times	15 times	10 times	5 times	
	With External Regenerative Resistor and Dynamic Brake Resistor						
Allowable Shaft Loads[*5]	LF	mm	20	25		35	
	Allowable Radial Load	N	78	245		392	490
	Allowable Thrust Load	N	49	68		147	

Note: The values in parentheses are for Servo Motors with Holding Brakes.

*1. These values are for operation in combination with a SERVOPACK when the temperature of the armature winding is 100°C. The values for other items are at 20°C. These are typical values.

*2. The rated torques are the continuous allowable torque values at a surrounding air temperature of 40°C with an aluminum heat sink of the dimensions given in the table.

*3. This does not apply to the shaft opening. Protective structure specifications apply only when the special cable is used.

*4. Observe the following precautions if you use a Servo Motor with a Holding Brake.
- The holding brake cannot be used to stop the Servo Motor.
- The time required to release the brake and the time required to brake depend on which discharge circuit is used. Confirm that the operation delay time is appropriate for the actual equipment.

*5. The 24-VDC power supply is not provided by Yaskawa.The allowable shaft loads are illustrated in the following figure. Design the mechanical system so that the thrust and radial loads applied to the Servo Motor shaft end during operation do not exceed the values given in the table.

Torque-Motor Speed Characteristics

A : Continuous duty zone ——— (solid lines): With three-phase 200-V or single-phase 230-V input
B : Intermittent duty zone - - - - - - - - (dotted lines): With single-phase 200-V input

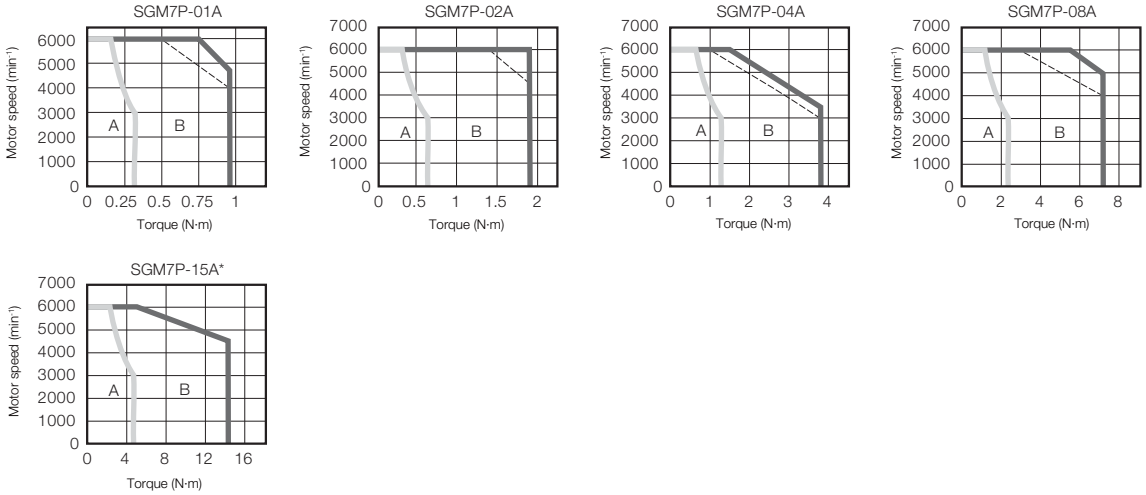

* You cannot use the SGM7P-15A Servo Motor together with a SERVOPACK with a single-phase power supply input.

Note: 1. These values are for operation in combination with a SERVOPACK when the temperature of the armature winding is 100°C. These are typical values.

2. The characteristics in the intermittent duty zone depend on the power supply voltage.
3. If the effective torque is within the allowable range for the rated torque, the Servo Motor can be used within the intermittent duty zone.
4. If you use a Servo Motor Main Circuit Cable that exceeds 20 m, the intermittent duty zone in the torque-motor speed characteristics will become smaller because the voltage drop increases.

Ratings of Gear Motors (200 V Models)

Gear Motor Model Number S7P____	Base Servo Motor Model SGM7P-	Gear Ratio	Gearing Efficiency *1	Rated Speed (RPM)	Max Speed (RPM)	Rated Torque (Nm)*2	Peak Torque (Nm)*2	Motor Inertia ($x10^{-4}$ kg-m^2)	Gearhead Inertia ($x10^{-4}$ kg-m^2)	Allow-able Radial Load (N)	Allow-able Axial Load (N)	Back-lash (arc-min)	Class
01A□ -VL050-03	01A7J6□	3:1	95	1000	2000	0.906	2.72	0.0592 (0.0892)	0.053	710	640	5	IP65
01A□ -VL050-05		5:1		600	1200	1.51	4.54		0.036				
01A□ -VL050-10		10:1		300	600	3.02	9.07		0.030				
01A□ -VL050-25		25:1	90	120	240	7.16	18.0*3		0.034			7	
01A□ -VL070-50		50:1		60	120	14.3	43.0		0.051	1200	1100	5	
02A□ -VL070-03	02A7J6□	3:1	95	1000	2000	1.82	5.44	0.263 (0.415)	0.25	1200	1100		
02A□ -VL070-05		5:1		600	1200	3.03	9.07		0.19				
02A□ -VL070-10		10:1		300	600	6.05	18.1		0.17				
02A□ -VL070-25		25:1	90	120	240	14.3	43.0		0.17				
02A□ -VL070-50		50:1		60	120	28.7	50.0*3		0.16				
04A□ -VL070-03	04A7J6□	3:1	95	1000	2000	3.62	10.9	0.409 (0.561)	0.25	1200	1100		
04A□ -VL070-05		5:1		600	1200	6.03	18.1		0.19				
04A□ -VL070-10		10:1		300	600	12.1	36.3		0.17				
04A□ -VL070-25		25:1	90	120	240	28.6	50.0*3		0.17				
04A□ -VL090-50		50:1		60	120	57.2	125*3		0.27	2400	2200		
08A□ -VL090-03	08A7E6□	3:1	95	1000	2000	6.81	20.4	2.100 (2.980)	1.1	2400	2200		
08A□ -VL090-05		5:1		600	1200	11.4	34.0		0.80				
08A□ -VL090-10		10:1		300	600	22.7	68.0		0.70				
08A□ -VL090-25		25:1	90	120	240	53.8	125*3		0.74				
08A□ -VL120-50		50:1		60	120	108	322		0.76	4300	3900		

Note: The values in parentheses are for Servo Motors with Holding Brakes (indicated by value of □ in model numbers).

*1. The gear efficiency depends on operating conditions such as the output torque, motor speed, and temperature.

*2. The gear motor output torque is expressed by the following formula: Output Torque = (Servo Motor Output Torque) x (Gearing Ratio) x (Gearing Efficiency). The values in the table are typical values for the rated torque, rated motor speed, and a surrounding air temperature of 25°C. They are reference values only.

*3. The output torque of the gear motor is limited by the mechanical limit of the gear head. Operation above this limit could result in premature failure of the gear motor.

Important

During operation of the gear motor, losses due to inefficiencies of the gearing mechanism are generated. The losses vary as the conditions for gear motor torque and speed change. Temperature rise can vary based on the mechanical inefficiencies and the heat dissipation conditions. For heat dissipation conditions, check the gear and motor temperatures with the actual equipment. If operating temperatures are too high, implement the following measures.

- Decrease the load ratio.
- Change the heat dissipation conditions.
- Use forced-air cooling for the motor with a cooling fan or other means.

Servo Motor Overload Protection Characteristics

The overload detection level is set for hot start conditions with a Servo Motor surrounding air temperature of 40°C.

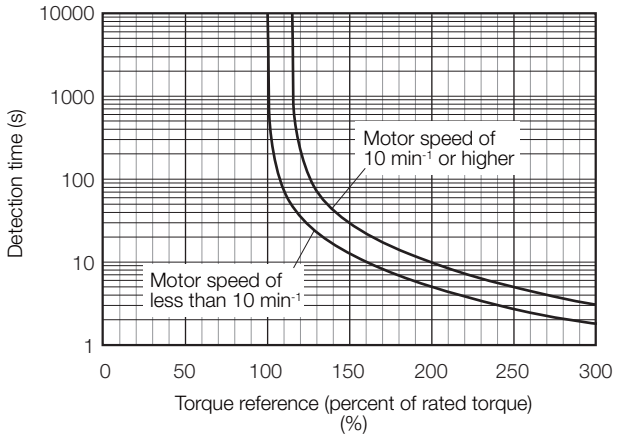

Note: The above overload protection characteristics do not mean that you can perform continuous duty operation with an output of 100% or higher. Use the Servo Motor so that the effective torque remains within the continuous duty zone given in *Torque-Motor Speed Characteristics* (page 110).

Allowable Load Moment of Inertia Scaling Factor for SERVOPACKs without Built-in Regenerative Resistors

The following graphs show the allowable load moment of inertia scaling factor of the motor speed for SERVOPACKs* without built-in regenerative resistors when an External Regenerative Resistor is not connected.

If the Servo Motor exceeds the allowable load moment of inertia, an overvoltage alarm may occur in the SERVOPACK.

These graphs provide reference data for deceleration at the rated torque or higher with a 200-VAC power supply input.

SGM7P-01A

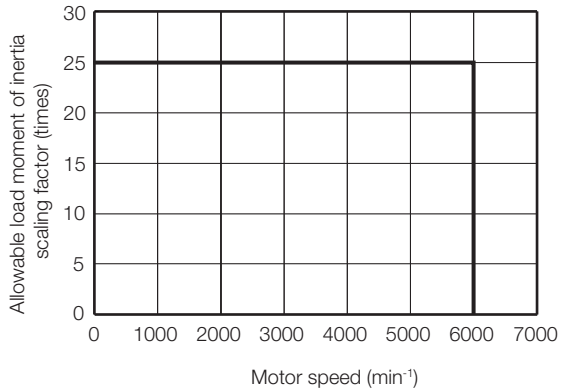

SGM7P-02A

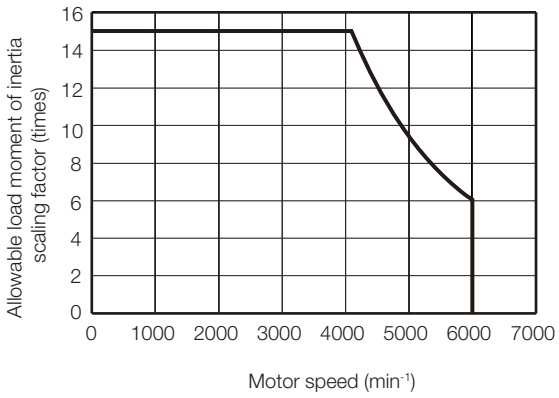

SGM7P-04A

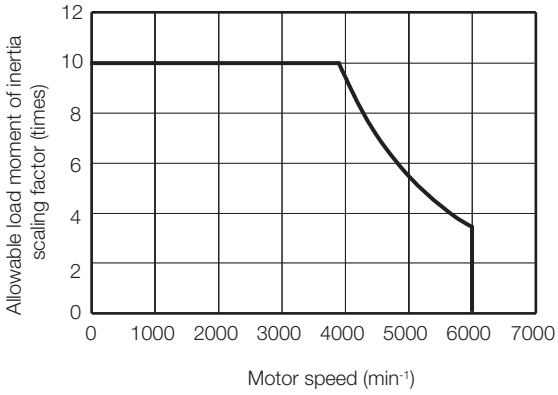

* Applicable SERVOPACK models: SGD7S-R70A, -R90A, -1R6A, or -2R8A

Servo Motor Heat Dissipation Conditions

The Servo Motor ratings are the continuous allowable values at a surrounding air temperature of 40°C when a heat sink is installed on the Servo Motor. If the Servo Motor is mounted on a small device component, the Servo Motor temperature may rise considerably because the surface for heat dissipation becomes smaller. Refer to the following graphs for the relation between the heat sink size and derating rate.

When using Servo Motors with derating, change the detection timing of overload warnings and overload alarms by referring to the motor overload detection level described in the following manual.

📖 *Σ-7-Series AC Servo Drive Rotary Servo Motor Product Manual* (Manual No.: SIEP S800001 36)

Note: The derating rates are applicable only when the average motor speed is less than or equal to the rated motor speed. If the average motor speed exceeds the rated motor speed, consult with your Yaskawa representative.

> Important
>
> The actual temperature rise depends on how the heat sink (i.e., the Servo Motor mounting section) is attached to the installation surface, what material is used for the Servo Motor mounting section, and the motor speed. Always check the Servo Motor temperature with the actual equipment.

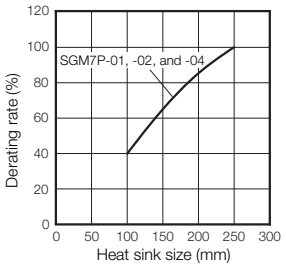

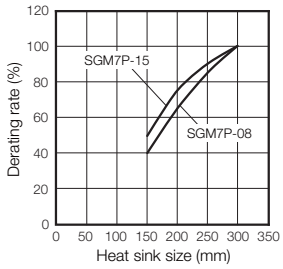

Applications Where the Surrounding Air Temperature of the Servo Motor Exceeds 40°C

The Servo Motor ratings are the continuous allowable values at a surrounding air temperature of 40°C. If you use a Servo Motor at a surrounding air temperature that exceeds 40°C (60°C max.), apply a suitable derating rate from the following graphs.

When using Servo Motors with derating, change the detection timing of overload warnings and overload alarms by referring to the motor overload detection level described in the following manual.

📖 *Σ-7-Series AC Servo Drive Rotary Servo Motor Product Manual* (Manual No.: SIEP S800001 36)

Note: 1. Use the combination of the SERVOPACK and Servo Motor so that the derating conditions are satisfied for both the SERVOPACK and Servo Motor.

2. The derating rates are applicable only when the average motor speed is less than or equal to the rated motor speed. If the average motor speed exceeds the rated motor speed, consult with your Yaskawa representative.

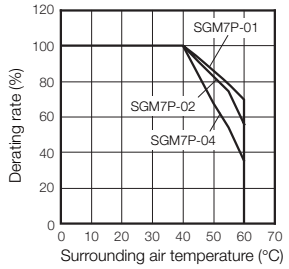

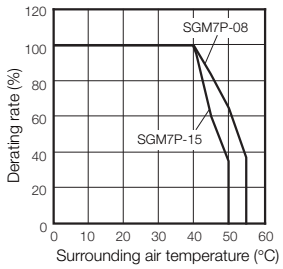

Applications Where the Altitude of the Servo Motor Exceeds 1,000 m

The Servo Motor ratings are the continuous allowable values at an altitude of 1,000 m or less. If you use a Servo Motor at an altitude that exceeds 1,000 m (2,000 m max.), the heat dissipation effect of the air is reduced. Apply the appropriate derating rate from the following graphs.

When using Servo Motors with derating, change the detection timing of overload warnings and overload alarms by referring to the motor overload detection level described in the following manual.

📖 *Σ-7-Series AC Servo Drive Rotary Servo Motor Product Manual* (Manual No.: SIEP S800001 36)

Note: 1. Use the combination of the SERVOPACK and Servo Motor so that the derating conditions are satisfied for both the SERVOPACK and Servo Motor.

2. The derating rates are applicable only when the average motor speed is less than or equal to the rated motor speed. If the average motor speed exceeds the rated motor speed, consult with your Yaskawa representative.

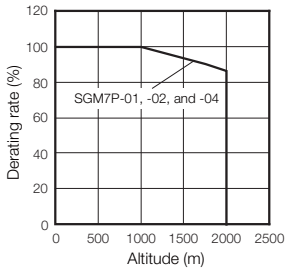

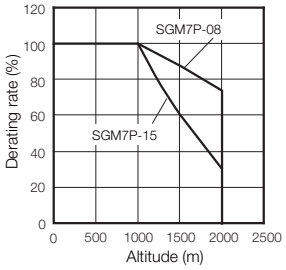

External Dimensions

◆ SGM7P-01, -02, and -04

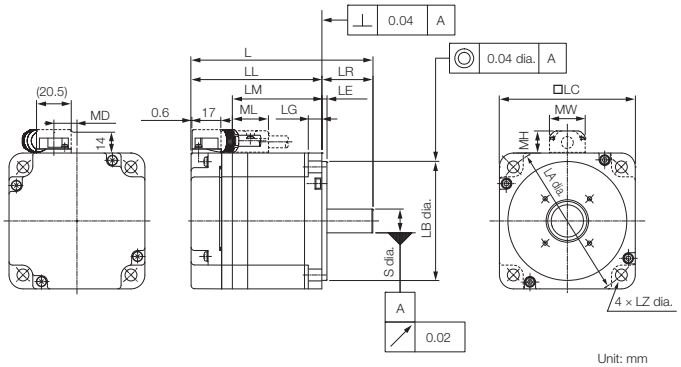

Unit: mm

Model SGM7P-	L	LL	LM	Flange Dimensions							S
				LR	LE	LG	LC	LA	LB	LZ	
01A□ A2□	85 (115)	60 (90)	36	25	3	6	60	70	$50^{0}_{-0.025}$	5.5	$8^{0}_{-0.009}$
02A□ A2□	97 (128.5)	67 (98.5)	43	30	3	8	80	90	$70^{0}_{-0.030}$	7	$14^{0}_{-0.011}$
04A□ A2□	107 (138.5)	77 (108.5)	53	30	3	8	80	90	$70^{0}_{-0.030}$	7	$14^{0}_{-0.011}$

Model SGM7P-	MD	MW	MH	ML	Approx. Mass [kg]
01A□ A2□	8.5	19	12	20	0.5 (0.7)
02A□ A2□	13.6	21	13	21	1.1 (1.6)
04A□ A2□	13.6	21	13	21	1.4 (1.9)

Note: 1. The values in parentheses are for Servo Motors with Holding Brakes.
2. Refer to the following section for detailed shaft end specifications.
☞ *Gearmotor Models: 100W to 750W (S7P01, S7P02, S7P04, S7P08)* **(page 118)**

■ Specifications of Options

• Oil Seal

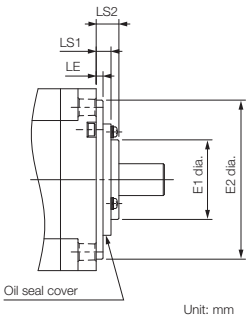

Unit: mm

Model SGM7P-	Dimensions with Oil Seal				
	E1	E2	LS1	LS2	LE
01A□ A2□	22	39	4	7.5	1.5
02A□ A2□	35	49	6.5	10	2.5
04A□ A2□					

◆ SGM7P-08 and -15

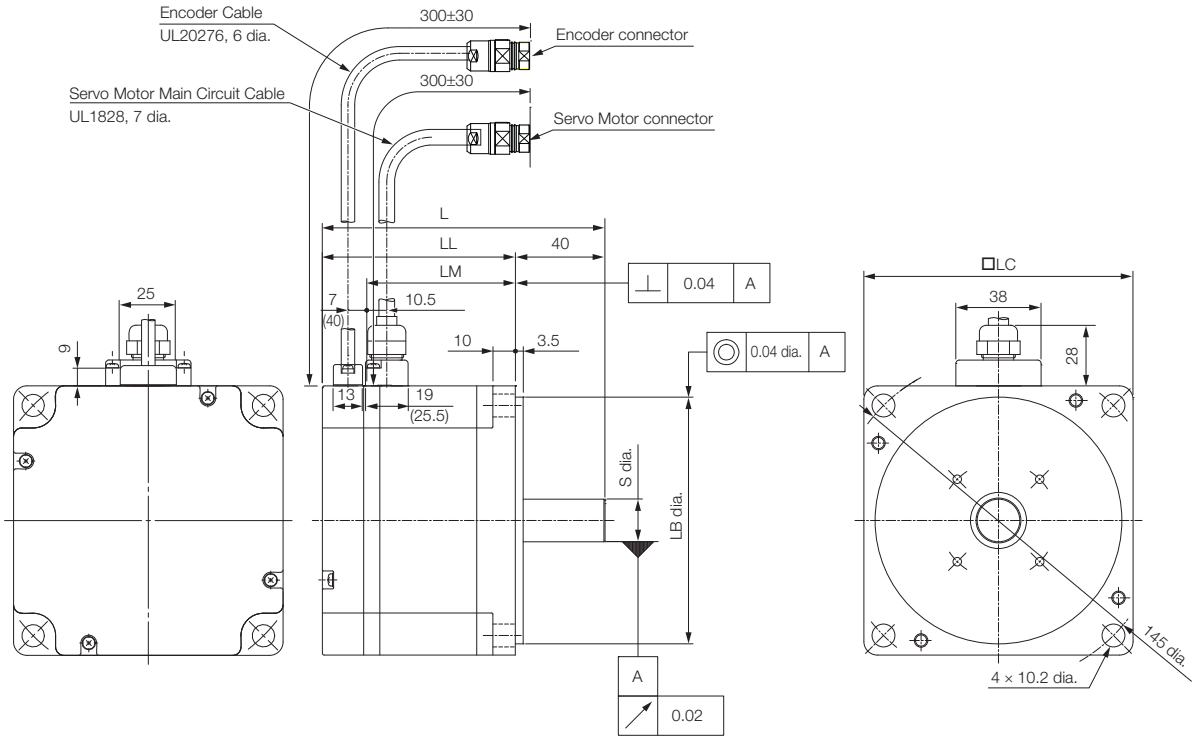

Unit: mm

Model SGM7P-	L	LL	LM	LB	LC	S	Approx. Mass [kg]
08A□ A2□	126.5 (160)	86.5 (120)	67.6	$110^{0}_{-0.035}$	120	$19^{0}_{-0.013}$	4.2 (5.7)
15A□ A2□	154.5 (187.5)	114.5 (147.5)	95.6	$110^{0}_{-0.035}$	120	$19^{0}_{-0.013}$	6.6 (8.1)

Note: 1. The values in parentheses are for Servo Motors with Holding Brakes.

2. Refer to the following section for detailed shaft end specifications.

☞ *Gearmotor Models: 100W to 750W (S7P01, S7P02, S7P04, S7P08)* **(page 118)**

■ Specifications of Options

• Oil Seal

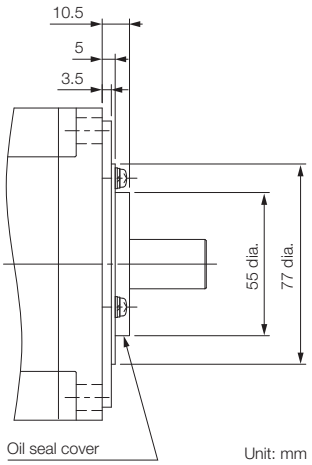

Unit: mm

◆ Gearmotor Models: 100W to 750W (S7P01, S7P02, S7P04, S7P08)

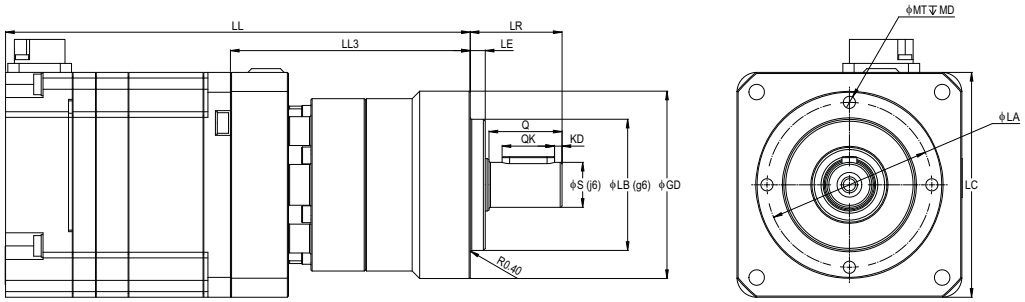

Shaft Detail (VL050 Models Only)

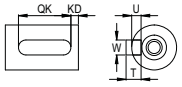

Shaft Detail (All Other Models)

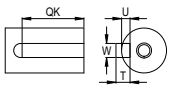

	Model S7P	LL	LL3	LR	LE	ϕS	ϕLB	ϕGD	LC	ϕLA	ϕMT	MD	Q	QK	KD	W	U	T
100 W Models																		
200 V	01A□ -VL050-03	124 (154)	64	24.5	4	12	35	50	60	44	M4	8	19.5	14	2	4	2.5	4
200 V	01A□ -VL050-05																	
200 V	01A□ -VL050-10																	
200 V	01A□ -VL050-25	140.5 (170.5)	80.5															
200 V	01A□ -VL070-50	155 (185)	95	36	5	16	52	70		62	M5	10	28	22	0	5	3	5
200 W Models																		
200 V	02A□ -VL070-03	146 (177.5)	79	35	5	16	52	70	80	62	M5	10	28	22	0	5	3	5
200 V	02A□ -VL070-05																	
200 V	02A□ -VL050-10																	
200 V	02A□ -VL070-25	167 (198.5)	100															
200 V	02A□ -VL070-50																	
400 W Models																		
200 V	04A□ -VL070-03	156 (187.5)	79	36	5	16	52	70	80	62	M5	10	28	22	0	5	3	5
200 V	04A□ -VL070-05																	
200 V	04A□ -VL070-10																	
200 V	04A□ -VL070-25	177 (208.5	100															
200 V	04A□ -VL090-50	196 (227.5)	119	46	7	22	68	90		80	M6	12	36	28		6	3.5	6
750 W Models																		
200 V	08A□ -VL090-03	193.5 (227)	107	46	7	22	68	90	130	80	M6	12	36	28	0	6	3.5	6
200 V	08A□ -VL090-05																	
200 V	08A□ -VL090-10																	
200 V	08A□ -VL090-25	215.5 (249)	129															
200 V	08A□ -VL120-50	231 (264.5)	144.5	70	9	32	90	120		108	M8	16	58	45		10	5	8

Note: The values in parentheses are for Servo Motors with Holding Brakes.

Shaft End Specifications

◆ SGM7P-□□□□□□□

Code	Specification
2	Straight without key
6	Straight with key and tap for one location (Key slot is JIS B1301-1996 fastening type.)

Shaft End Details		Servo Motor Model SGM7P-				
		01	02	04	08	15
Code: 2 (Straight without Key)						
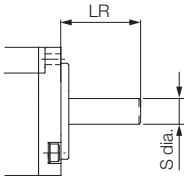	LR	25	30		40	
	S	$8^{0}_{-0.009}$	$14^{0}_{-0.011}$		$19^{0}_{-0.013}$	
Code: 6 (Straight with Key and Tap)						
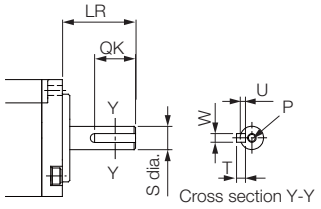	LR	25	30		40	
	QK	14	14		22	
	S	$8^{0}_{-0.009}$	$14^{0}_{-0.011}$		$19^{0}_{-0.013}$	
	W	3	5		6	
	T	3	5		6	
	U	1.8	3		3.5	
	P	M3 × 6L	M5 × 8L		M6 × 10L	

Selecting Cables

◆ Cable Configurations

The cables shown below are required to connect a Servo Motor to a SERVOPACK.

Encoder Cable of 20 m or Less

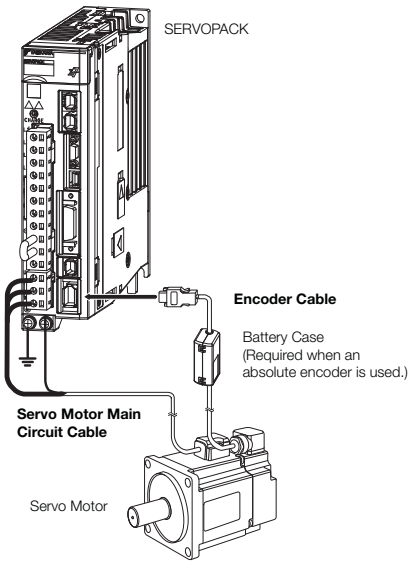

Encoder Cable of 30 m to 50 m (Relay Cable)

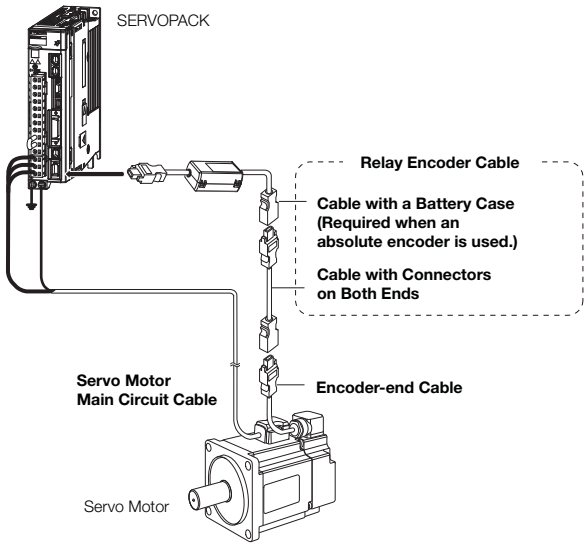

For SGM7P-08 or -15
(750 W or 1.5 kW) Servo Motor

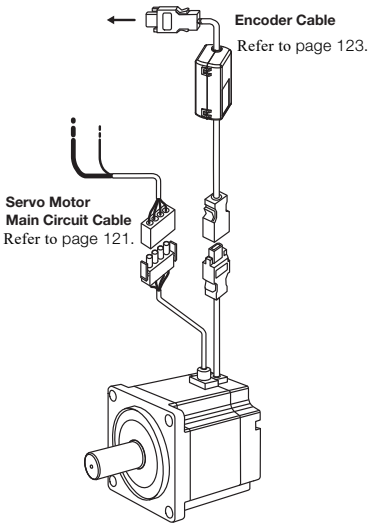

For SGM7P-08 or -15
(750 W or 1.5 kW) Servo Motor

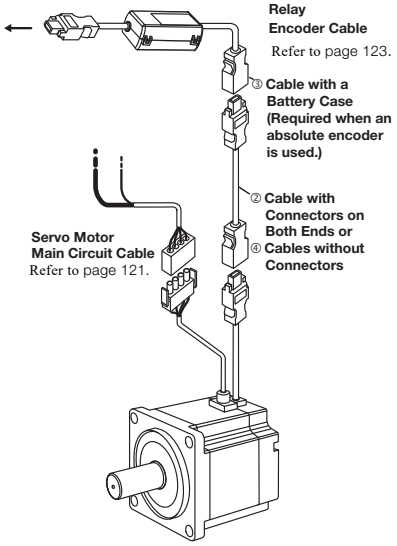

Note: 1. If the cable length exceeds 20 m, be sure to use a Relay Encoder Cable.

2. If you use a Servo Motor Main Circuit Cable that exceeds 20 m, the intermittent duty zone in the torque-motor speed characteristics will become smaller because the voltage drop increases.

3. Refer to the following manual for the following information.
   - Cable dimensional drawings and cable connection specifications
   - Order numbers and specifications of individual connectors for cables
   - Order numbers and specifications for wiring materials

   📖 *Σ-7-Series AC Servo Drive Peripheral Device Selection Manual* (Manual No.: SIEP S800001 32)

Servo Motor Main Circuit Cables

Servo Motor Model	Name	Length (L)	Order Number			Appearance
			Standard Cable	Flexible Cable*	Flexible and Shielded	
SGM7P-01 100 W	For Servo Motors without Holding Brakes	3 m	JZSP-CSM01-03-E	JZSP-CSM21-03-E	YAI-CSM21-03-P-E	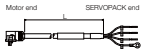
		5 m	JZSP-CSM01-05-E	JZSP-CSM21-05-E	YAI-CSM21-05-P-E	
		10 m	JZSP-CSM01-10-E	JZSP-CSM21-10-E	YAI-CSM21-10-P-E	
		15 m	JZSP-CSM01-15-E	JZSP-CSM21-15-E	YAI-CSM21-15-P-E	
		20 m	JZSP-CSM01-20-E	JZSP-CSM21-20-E	YAI-CSM21-20-P-E	
		30 m	JZSP-CSM01-30-E	JZSP-CSM21-30-E	YAI-CSM21-30-P-E	
		40 m	JZSP-CSM01-40-E	JZSP-CSM21-40-E	YAI-CSM21-40-P-E	
		50 m	JZSP-CSM01-50-E	JZSP-CSM21-50-E	YAI-CSM21-50-P-E	
SGM7P-02 and -04 200 W, 400 W		3 m	JZSP-CSM02-03-E	JZSP-CSM22-03-E	YAI-CSM22-03-P-E	
		5 m	JZSP-CSM02-05-E	JZSP-CSM22-05-E	YAI-CSM22-05-P-E	
		10 m	JZSP-CSM02-10-E	JZSP-CSM22-10-E	YAI-CSM22-10-P-E	
		15 m	JZSP-CSM02-15-E	JZSP-CSM22-15-E	YAI-CSM22-15-P-E	
		20 m	JZSP-CSM02-20-E	JZSP-CSM22-20-E	YAI-CSM22-20-P-E	
		30 m	JZSP-CSM02-30-E	JZSP-CSM22-30-E	YAI-CSM22-30-P-E	
		40 m	JZSP-CSM02-40-E	JZSP-CSM22-40-E	YAI-CSM22-40-P-E	
		50 m	JZSP-CSM02-50-E	JZSP-CSM22-50-E	YAI-CSM22-50-P-E	
SGM7P-08 750 W		3 m	N/A	N/A	B4ICE-03(A)	
		5 m	N/A	N/A	B4ICE-05(A)	
		10 m	N/A	N/A	B4ICE-10(A)	
		15 m	N/A	N/A	B4ICE-15(A)	
		20 m	N/A	N/A	B4ICE-20(A)	
		30 m	N/A	N/A	B4ICE-30(A)	
		40 m	N/A	N/A	B4ICE-40(A)	
		50 m	N/A	N/A	B4ICE-50(A)	
SGM7P-15 1.5 kW		3 m	N/A	N/A	B5ICE-03(A)	
		5 m	N/A	N/A	B5ICE-05(A)	
		10 m	N/A	N/A	B5ICE-10(A)	
		15 m	N/A	N/A	B5ICE-15(A)	
		20 m	N/A	N/A	B5ICE-20(A)	
		30 m	N/A	N/A	B5ICE-30(A)	
		40 m	N/A	N/A	B5ICE-40(A)	
		50 m	N/A	N/A	B5ICE-50(A)	

* Use Flexible Cables for moving parts of machines, such as robots.

Servo Motor Model	Name	Length (L)	Order Number			Appearance
			Standard Cable	Flexible Cable*	Flexible and Shielded	
SGM7P-01 100 W	For Servo Motors with Holding Brakes	3 m	JZSP-CSM11-03-E	JZSP-CSM31-03-E	YAI-CSM31-03-P-E	
		5 m	JZSP-CSM11-05-E	JZSP-CSM31-05-E	YAI-CSM31-05-P-E	
		10 m	JZSP-CSM11-10-E	JZSP-CSM31-10-E	YAI-CSM31-10-P-E	
		15 m	JZSP-CSM11-15-E	JZSP-CSM31-15-E	YAI-CSM31-15-P-E	
		20 m	JZSP-CSM11-20-E	JZSP-CSM31-20-E	YAI-CSM31-20-P-E	
		30 m	JZSP-CSM11-30-E	JZSP-CSM31-30-E	YAI-CSM31-30-P-E	
		40 m	JZSP-CSM11-40-E	JZSP-CSM31-40-E	YAI-CSM31-40-P-E	
		50 m	JZSP-CSM11-50-E	JZSP-CSM31-50-E	YAI-CSM31-50-P-E	
SGM7P-02 and -04 200 W, 400 W		3 m	JZSP-CSM12-03-E	JZSP-CSM32-03-E	YAI-CSM32-03-P-E	
		5 m	JZSP-CSM12-05-E	JZSP-CSM32-05-E	YAI-CSM32-05-P-E	
		10 m	JZSP-CSM12-10-E	JZSP-CSM32-10-E	YAI-CSM32-10-P-E	
		15 m	JZSP-CSM12-15-E	JZSP-CSM32-15-E	YAI-CSM32-15-P-E	
		20 m	JZSP-CSM12-20-E	JZSP-CSM32-20-E	YAI-CSM32-20-P-E	
		30 m	JZSP-CSM12-30-E	JZSP-CSM32-30-E	YAI-CSM32-30-P-E	
		40 m	JZSP-CSM12-40-E	JZSP-CSM32-40-E	YAI-CSM32-40-P-E	
		50 m	JZSP-CSM12-50-E	JZSP-CSM32-50-E	YAI-CSM32-50-P-E	
SGM7P-08 750 W		3 m	N/A	N/A	B4IBCE-03(A)	
		5 m	N/A	N/A	B4IBCE-05(A)	
		10 m	N/A	N/A	B4IBCE-10(A)	
		15 m	N/A	N/A	B4IBCE-15(A)	
		20 m	N/A	N/A	B4IBCE-20(A)	
		30 m	N/A	N/A	B4IBCE-30(A)	
		40 m	N/A	N/A	B4IBCE-40(A)	
		50 m	N/A	N/A	B4IBCE-50(A)	
SGM7P-15 1.5 kW		3 m	N/A	N/A	B5IBCE-03(A)	
		5 m	N/A	N/A	B5IBCE-05(A)	
		10 m	N/A	N/A	B5IBCE-10(A)	
		15 m	N/A	N/A	B5IBCE-15(A)	
		20 m	N/A	N/A	B5IBCE-20(A)	
		30 m	N/A	N/A	B5IBCE-30(A)	
		40 m	N/A	N/A	B5IBCE-40(A)	
		50 m	N/A	N/A	B5IBCE-50(A)	

* Use Flexible Cables for moving parts of machines, such as robots.

Encoder Cables of 20 m or Less

Servo Motor Model	Name	Length (L)	Order Number		Appearance
			Standard Cable	Flexible Cable*1	
SGM7P-01, -02 and -04 100 W, 200 W, 400 W	For incremental encoder Cable installed toward load	3 m	JZSP-C7PI0D-03-E	JZSP-C7PI2D-03-E	
		5 m	JZSP-C7PI0D-05-E	JZSP-C7PI2D-05-E	
		10 m	JZSP-C7PI0D-10-E	JZSP-C7PI2D-10-E	
		15 m	JZSP-C7PI0D-15-E	JZSP-C7PI2D-15-E	
		20 m	JZSP-C7PI0D-20-E	JZSP-C7PI2D-20-E	
SGM7P-08 and -15 750 W, 1500 W (non-Interconnectron style)		3 m	JZSP-CMP00-03-E	JZSP-CMP10-03-E	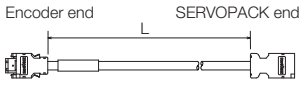
		5 m	JZSP-CMP00-05-E	JZSP-CMP10-05-E	
		10 m	JZSP-CMP00-10-E	JZSP-CMP10-10-E	
		15 m	JZSP-CMP00-15-E	JZSP-CMP10-15-E	
		20 m	JZSP-CMP00-20-E	JZSP-CMP10-20-E	
SGM7P-01, -02 and -04 100 W, 200 W, 400 W	For absolute encoder: With Battery Case*2 Cable installed toward load	3 m	JZSP-C7PA0D-03-E	JZSP-C7PA2D-03-E	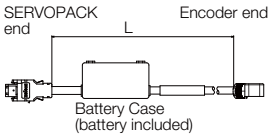
		5 m	JZSP-C7PA0D-05-E	JZSP-C7PA2D-05-E	
		10 m	JZSP-C7PA0D-10-E	JZSP-C7PA2D-10-E	
		15 m	JZSP-C7PA0D-15-E	JZSP-C7PA2D-15-E	
		20 m	JZSP-C7PA0D-20-E	JZSP-C7PA2D-20-E	
SGM7P-08 and -15 750 W, 1500 W (Interconnectron style)	For incremental encoder Cable installed upward *3	3 m	N/A	A1ICE-03(A)	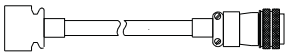
		5 m	N/A	A1ICE-05(A)	
		10 m	N/A	A1ICE-10(A)	
		15 m	N/A	A1ICE-15(A)	
		20 m	N/A	A1ICE-20(A)	
All SGM7P models	Cable with a Battery Case (Required when an absolute encoder is used.*4)	0.3 m	JZSP-CSP12-E Note: this cable used with A1ICE cable listed above		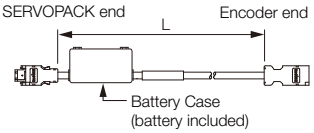

*1. Use Flexible Cables for moving parts of machines, such as robots.

*2. If a battery is connected to the host controller, the Battery Case is not required. If so, use a cable for incremental encoders

*3. Non RoHS.

*4. This cable is not required if a battery is connected to the host controller.

Relay Encoder Cables of 30 m to 50 m

Servo Motor Model	Name	Length (L)	Order Number	Appearance
SGM7P-01, -02 and -04 100 W, 200 W, 400 W,*	Encoder-end Cable (for incremental or absolute encoder) Cable installed toward load	0.3 m	JZSP-C7PRCD-E	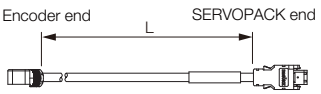
	Cables with Connectors on Both Ends (for incremental or absolute encoder)	30 m	JZSP-UCMP00-30-E	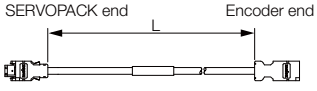
		40 m	JZSP-UCMP00-40-E	
		50 m	JZSP-UCMP00-50-E	

* Note: Relay encoder cables not available for 750W and 1.5kW models.

SGM7G Servo Motors (without Gear Box)

Model Designations

SGM7G - 03 A 7 D 6 1

Σ-7 Series Servo Motors: SGM7G	1st+2nd digits	3rd digit	4th digit	5th digit	6th digit	7th digit

1st+2nd digits Rated Output

Code	Specification
03	300 W
05	450 W
09	850 W
13	1.3 kW
20	1.8 kW
30	2.9 kW *1
44	4.4 kW
55	5.5 kW
75	7.5 kW
1A	11 kW
1E	15 kW

3rd digit Power Supply Voltage

Code	Specification
A	Three-phase 200 VAC
D	Three-phase 400 VAC

4th digit Serial Encoder

Code	Specification
7	24-bit absolute
F	24-bit incremental

5th digit Design Revision Order

Code	Specification
D	Global Design Revision (200V)
F	Global Design Revision (400V)
R	High Speed Version (400V)

■ Non Stock Items

6th digit Shaft End

Code	Specification
2	Straight without key
6	Straight with key and tap
S	Straight without key (850 W, 1.3 kW)
K	Straight with key and tap (300 W, 850 W, 1.3 kW)

7th digit Options

Code	Specification
1	Without options
C	With holding brake (24 VDC)
E	With oil seal and holding brake (24 VDC)
S	With oil seal
H	With dust seal and holding brake (24 VDC)
F	With dust seal

*1. The rated output is 2.4 kW if you combine the SGM7G-30A with the SGD7S-200A.

*2. Shaft end specification K is standard on -03, -09, and -13 Models

SGM7G Gear Motors

The SGM7G gear motor product family pairs SGM7G servo motors with high precision, low backlash inline planetary gear heads resulting in a portfolio of rotary actuators fit for a wide range of applications. The family of gear motors has been thoroughly tested and adheres to the high levels of quality and performance expected from Yaskawa.

The high precision gear heads offer a variety of application advantages:

- ① **Quiet operation** – helical cut gears contribute toward reduced vibration and noise
- ② **High precision** – a standard backlash of 5 arc-min make this gear head ideal for the most accurate applications
- ③ **High rigidity and torque capacity** – achieved with a design which incorporates uncaged needle roller bearings
- ④ **Optimized adapter bushing** – minimizes inertia allowing for more output torque to be realized
- ⑤ **No leakage through the seal** – high viscosity, anti-separation grease does not liquefy and does not migrate away from the gears
- **Maintenance-free** – no need to replace the grease for the life of the unit. The reducer can be positioned in any orientation

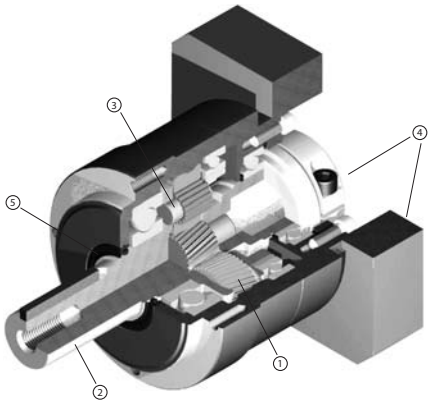

Model Designations

S7G 01 A C - VL 050 - 05

Σ-7 Series Gear Motors: SGM7G	1st+2nd digits	3rd digit	4th digit	5th digit	6th digit	7th digit

1st+2nd digits Rated Output

Code	Specification
05	450 W
09	850 W
13	1.3 kW
20	1.8 kW
30	2.9 kW
44	4.4 kW
55	5.5 kW
75	7.5 kW

3rd digit Power Supply Voltage

Code	Specification
A	200 VAC

4th digit Brake Option

Code	Specification
Blank	No brake
C	24 V Brake

5th digit Gear box backlash

Code	Specification
VL	5 arc-min backlash

6th digit Gear head frame size

Code	Specification
070	70 mm
090	90 mm
120	120 mm
155	155 mm
205	205mm
235	235mm

7th digit Gear Ratio

Code	Specification
03	3:1 Ratio
05	5:1 Ratio
10	10:1 Ratio
25	25:1 Ratio
50	50:1 Ratio

Specifications and Ratings

Specifications (200V)

Voltage		200 V										
Model SGM7G-		03A	05A	09A	13A	20A	30A	44A	55A	75A	1AA	1EA
Time Rating		Continuous										
Thermal Class		UL: F, CE: F										
Insulation Resistance		500 VDC, 10 MΩ min.										
Withstand Voltage		1,500 VAC for 1 minute										
Excitation		Permanent magnet										
Mounting		Flange-mounted										
Drive Method		Direct drive										
Rotation Direction		Counterclockwise (CCW) for forward reference when viewed from the load side										
Vibration Class[*1]		V15										
Environmental Conditions	Surrounding Air Temperature	0°C to 40°C (With derating, usage is possible between 40°C and 60°C.)[*4]										
	Surrounding Air Humidity	20% to 80% relative humidity (with no condensation)										
	Installation Site	• Must be indoors and free of corrosive and explosive gases. • Must be well-ventilated and free of dust and moisture. • Must facilitate inspection and cleaning. • Must have an altitude of 1,000 m or less. (With derating, usage is possible between 1,000 m and 2,000 m.)[*5] • Must be free of strong magnetic fields.										
	Storage Environment	Store the Servo Motor in the following environment if you store it with the power cable disconnected. Storage Temperature: -20°C to 60°C (with no freezing) Storage Humidity: 20% to 80% relative humidity (with no condensation)										
Shock Resistance[*2]	Impact Acceleration Rate at Flange	490 m/s^2										
	Number of Impacts	2 times										
Vibration Resistance[*3]	Vibration Acceleration Rate at Flange	49 m/s^2 (24.5 m/s^2 front to back)							24.5 m/s^2			
Applicable SERVOPACKs	SGD7S-	3R8A		7R6A	120A	180A	330A		470A	550A	590A	780A
	SGD7W-	5R5A[*6] 7R6A[*6]		7A6A	–							

*1. A vibration class of V15 indicates a vibration amplitude of 15 μm maximum on the Servo Motor without a load at the rated motor speed.

*2. The shock resistance for shock in the vertical direction when the Servo Motor is mounted with the shaft in a horizontal position is given in the above table.

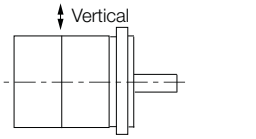

Shock Applied to the Servo Motor

*3. The vertical, side-to-side, and front-to-back vibration resistance for vibration in three directions when the Servo Motor is mounted with the shaft in a horizontal position is given in the above table. The strength of the vibration that the Servo Motor can withstand depends on the application.
Always check the vibration acceleration rate that is applied to the Servo Motor with the actual equipment.

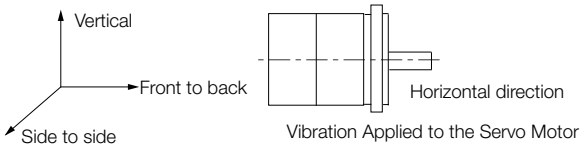

Vibration Applied to the Servo Motor

*4. If the surrounding air temperature will exceed 40°C, refer to the following section.
☞ *Applications Where the Surrounding Air Temperature of the Servo Motor Exceeds 40°C* (page 143)

*5. If the altitude will exceed 1,000 m, refer to the following section.
☞ *Applications Where the Altitude of the Servo Motor Exceeds 1,000 m* (page 144)

*6. If you use a S-7W SERVOPACK, the control gain may not increase as much as with a S-7S SERVOPACK and other performances may be lower than those achieved with a S-7S SERVOPACK.

Specifications (400V)

Voltage			400 V									
Model SGM7G-			05D	09D	13D	20D	30D	44D	55D	75D	1AD	1ED
Time Rating			Continuous									
Thermal Class			UL: F, CE: F									
Insulation Resistance			500 VDC, 10 MΩ min.									
Withstand Voltage			1,800 VAC for 1 minute									
Excitation			Permanent magnet									
Mounting			Flange-mounted									
Drive Method			Direct drive									
Rotation Direction			Counterclockwise (CCW) for forward reference when viewed from the load side									
Vibration Class[*1]			V15									
Environmental Conditions		Surrounding Air Temperature	0°C to 40°C (With derating, usage is possible between 40°C and 60°C.)[*4]									
		Surrounding Air Humidity	20% to 80% relative humidity (with no condensation)									
		Installation Site	• Must be indoors and free of corrosive and explosive gases. • Must be well-ventilated and free of dust and moisture. • Must facilitate inspection and cleaning. • Must have an altitude of 1,000 m or less. (With derating, usage is possible between 1,000 m and 2,000 m.)[*5] • Must be free of strong magnetic fields.									
		Storage Environment	Store the Servo Motor in the following environment if you store it with the power cable disconnected. Storage Temperature: -20°C to 60°C (with no freezing) Storage Humidity: 20% to 80% relative humidity (with no condensation)									
Shock Resistance[*2]		Impact Acceleration Rate at Flange	490 m/s^2									
		Number of Impacts	2 times									
Vibration Resistance[*3]		Vibration Acceleration Rate at Flange	49 m/s^2 (24.5 m/s^2 front to back)							24.5 m/s^2		
Applicable SERVOPACKs	with standard Servo Motor	SGD7S-	1R9D	3R5D	5R4D	8R4D	120D	170D	210D	260D	280D	370D
		SGD7W-	2R6D[*6] 5R4D[*6]		5R4D	5R4D	-					
	with high-speed servo motor	SGD7S-	3R5D	5R4D	8R4D	120D	170D	210D	-			
		SGD7W-	2R6D[*6] 5R4D[*6]		5R4D	-						

*1. A vibration class of V15 indicates a vibration amplitude of 15 μm maximum on the Servo Motor without a load at the rated motor speed.

*2. The shock resistance for shock in the vertical direction when the Servo Motor is mounted with the shaft in a horizontal position is given in the above table.

*3. The vertical, side-to-side, and front-to-back vibration resistance for vibration in three directions when the Servo Motor is mounted with the shaft in a horizontal position is given in the above table. The strength of the vibration that the Servo Motor can withstand depends on the application. Always check the vibration acceleration rate that is applied to the Servo Motor with the actual equipment.

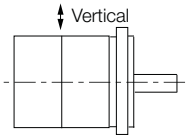

Shock Applied to the Servo Motor

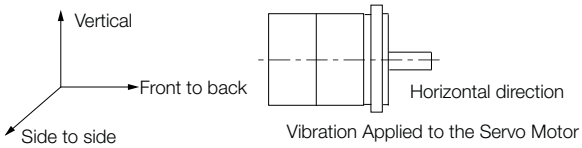

Vibration Applied to the Servo Motor

*4. If the surrounding air temperature will exceed 40°C, refer to the following section.

☞ *Applications Where the Surrounding Air Temperature of the Servo Motor Exceeds 40°C* (page 143)

*5. If the altitude will exceed 1,000 m, refer to the following section.

☞ *Applications Where the Altitude of the Servo Motor Exceeds 1,000 m* (page 144)

*6. If you use a S-7W SERVOPACK, the control gain may not increase as much as with a S-7S SERVOPACK and other performances may be lower than those achieved with a S-7S SERVOPACK.

Servo Motor Ratings (200 V Models -03A to -20A)

Voltage			200 V				
Model SGM7G-			03A	05A	09A	13A	20A
Rated Output[*1]		kW	0.3	0.45	0.85	1.3	1.8
Rated Torque[*1, *2]		N•m	1.96	2.86	5.39	8.34	11.5
Instantaneous Maximum Torque[*1]		N•m	5.88	8.92	14.2	23.3	28.7
Rated Current[*1]		Arms	2.8	3.8	6.9	10.7	16.7
Instantaneous Maximum Current[*1]		Arms	8.0	11	17	28	42
Rated Motor Speed[*1]		min^{-1}	1500				
Maximum Motor Speed[*1]		min^{-1}	3000				
Torque Constant		N•m/Arms	0.776	0.854	0.859	0.891	0.748
Motor Moment of Inertia		$\times 10^{-4}$ kg•m^2	2.48 (2.73)	3.33 (3.58)	13.9 (16.0)	19.9 (22.0)	26.0 (28.1)
Rated Power Rate[*1]		kW/s	15.5 (14.1)	24.6 (22.8)	20.9 (18.2)	35.0 (31.6)	50.9 (47.1)
Rated Angular Acceleration Rate[*1]		rad/s^2	7900 (7180)	8590 (7990)	3880 (3370)	4190 (3790)	4420 (4090)
Heat Sink Size		mm	250 × 250 × 6 (aluminum)		400 × 400 × 20 (steel)		
Protective Structure[*3]			Totally enclosed, self-cooled, IP67				
Holding Brake Specifications[*4]	Rated Voltage	V	24 VDC $^{+10\%}_{0}$				
	Capacity	W	10				
	Holding Torque	N•m	4.5		12.7	19.6	
	Coil Resistance	Ω (at 20°C)	56		59		
	Rated Current	A (at 20°C)	0.43		0.41		
	Time Required to Release Brake	ms	100				
	Time Required to Brake	ms	80				
Allowable Load Moment of Inertia (Motor Moment of Inertia Ratio)			15 times	15 times	5 times		
Allowable Shaft Loads[*5]	LF	mm	40		58		
	Allowable Radial Load	N	490			686	980
	Allowable Thrust Load	N	98			343	392

Note: 1. The values in parentheses are for Servo Motors with Holding Brakes.

2. Refer to the following section for footnotes *1 to *5.

☞ ■ *Notes for the Servo Motor Ratings Tables* (page 131)

Torque-Motor Speed Characteristics (200 V Models -03A to -20A)

A : Continuous duty zone
B : Intermittent duty zone

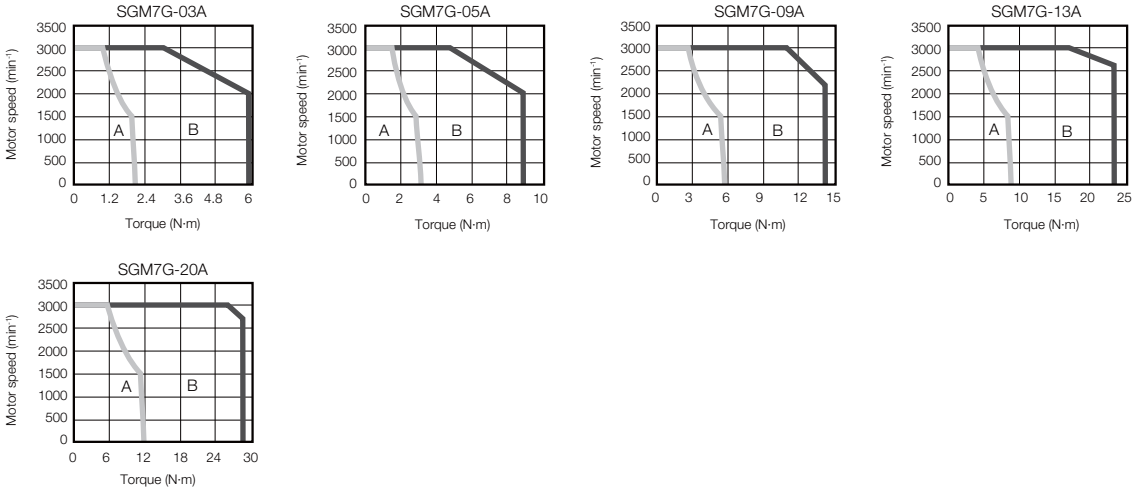

Note: 1. These values are for operation in combination with a SERVOPACK when the temperature of the armature winding is 20°C. These are typical values.

2. The characteristics in the intermittent duty zone depend on the power supply voltage.

3. If the effective torque is within the allowable range for the rated torque, the Servo Motor can be used within the intermittent duty zone.

4. If you use a Servo Motor Main Circuit Cable that exceeds 20 m, the intermittent duty zone in the torque-motor speed characteristics will become smaller because the voltage drop increases.

Servo Motor Ratings (200 V Models -30A to -1EA)

Voltage			200 V						
Model SGM7G-			30A	30A[*6]	44A	55A	75A	1AA	1EA
Rated Output[*1]		kW	2.9	2.4	4.4	5.5	7.5	11	15
Rated Torque[*1, *2]		N•m	18.6	15.1	28.4	35.0	48.0	70.0	95.4
Instantaneous Maximum Torque[*1]		N•m	54.0	45.1	71.6	102	119	175	224
Rated Current[*1]		Arms	23.8	19.6	32.8	37.2	54.7	58.6	78.0
Instantaneous Maximum Current[*1]		Arms	70	56	84	110	130	140	170
Rated Motor Speed[*1]		min^{-1}	1500	1500	1500	1500	1500	1500	1500
Maximum Motor Speed[*1]		min^{-1}	3000	3000	3000	3000	3000	2000	2000
Torque Constant		N•m/Arms	0.848	0.848	0.934	1.00	0.957	1.38	1.44
Motor Moment of Inertia		$\times 10^{-4}$ kg•m^2	46.0 (53.9)	46.0 (53.9)	67.5 (75.4)	89.0 (96.9)	125 (133)	242 (261)	303 (341)
Rated Power Rate[*1]		kW/s	75.2 (64.2)	49.5 (42.2)	119 (107)	138 (126)	184 (173)	202 (188)	300 (267)
Rated Angular Acceleration Rate[*1]		rad/s^2	4040 (3450)	3280 (2800)	4210 (3770)	3930 (3610)	3840 (3610)	2890 (2680)	3150 (2800)
Heat Sink Size		mm	550 × 550 × 30 (steel)					650 × 650 × 35 (steel)	
Protective Structure[*3]			Totally enclosed, self-cooled, IP67						
Holding Brake Specifications[*4]	Rated Voltage	V	24 VDC $^{+10\%}_{0}$						
	Capacity	W	18.5			25		32	35
	Holding Torque	N•m	43.1			72.6		84.3	114.6
	Coil Resistance	Ω (at 20°C)	31			23		18	17
	Rated Current	A (at 20°C)	0.77			1.05		1.33	1.46
	Time Required to Release Brake	ms	170						250
	Time Required to Brake	ms	100			80			
Allowable Load Moment of Inertia (Motor Moment of Inertia Ratio)			5 times	3 times	5 times				
	With External Regenerative Resistor and Dynamic Brake Resistor		10 times	7 times	10 times				
Allowable Shaft Loads[*5]	LF	mm	79			113		116	
	Allowable Radial Load	N	1470			1764			4998
	Allowable Thrust Load	N	490			588			2156

Note: 1. The values in parentheses are for Servo Motors with Holding Brakes.

2. Refer to the following section for footnotes *1 to *6.

☞ ■ *Notes for the Servo Motor Ratings Tables* (page 131)

Torque-Motor Speed Characteristics (200 V Models -30A to -1EA)

A : Continuous duty zone
B : Intermittent duty zone
——— (solid lines): With three-phase 200-V input
- - - - - - - - (dotted lines): When combined with the SGD7S-200A

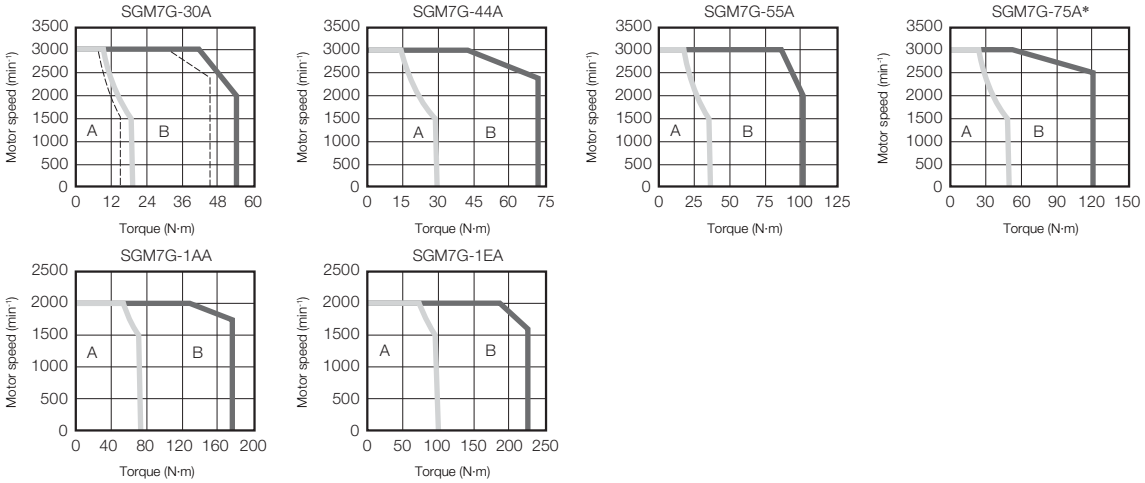

* Use an SGM7G-75A Servo Motor with a Holding Brake with an output torque of 14.4 N·m (30% of the rated torque) or lower when using the Servo Motor in continuous operation at the maximum motor speed of 3,000 min-1.

Note: 1. These values are for operation in combination with a SERVOPACK when the temperature of the armature winding is 100°C. These are typical values.

2. The characteristics in the intermittent duty zone depend on the power supply voltage.

3. If the effective torque is within the allowable range for the rated torque, the Servo Motor can be used within the intermittent duty zone.

4. If you use a Servo Motor Main Circuit Cable that exceeds 20 m, the intermittent duty zone in the torque-motor speed characteristics will become smaller because the voltage drop increases.

■ Notes for the Servo Motor Ratings Tables

*1. These values are for operation in combination with a SERVOPACK when the temperature of the armature winding is 20°C. These are typical values.

*2. The rated torques are the continuous allowable torque values at a surrounding air temperature of 40°C with an aluminum or steel heat sink of the dimensions given in the table.

*3. This does not apply to the shaft opening. Protective structure specifications apply only when the special cable is used.

*4. Observe the following precautions if you use a Servo Motor with a Holding Brake.
- The holding brake cannot be used to stop the Servo Motor.
- The time required to release the brake and the time required to brake depend on which discharge circuit is used. Confirm that the operation delay time is appropriate for the actual equipment.
- The 24-VDC power supply is not provided by Yaskawa.

*5. The allowable shaft loads are illustrated in the following figure. Design the mechanical system so that the thrust and radial loads applied to the Servo Motor shaft end during operation do not exceed the values given in the table.

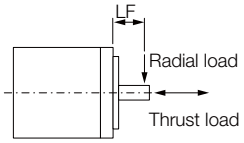

*6. This is the value if you combine the SGM7G-30A with the SGD7S-200A.

Ratings of Servo Motors (400 V Models -05D to -30D)

Voltage			400 V				
Model SGM7G-			05D	09D	13D	20D	30D
Rated Output*1		kW	0.45	0.85	1.3	1.8	2.9
Rated Torque*1, *2		N•m	2.86	5.39	8.34	11.5	18.6
Instantaneous Maximum Torque*1		N•m	8.92	13.8	23.3	28.7	45.1
Rated Current*1		Arms	1.9	3.5	5.4	8.4	11.9
Instantaneous Max.Current*1		Arms	5.5	8.5	14	20	28
Rated Motor Speed*1		min^{-1}	1500				
Maximum Motor Speed*1		min^{-1}	3000				
Torque Constant		N•m/Arms	1.71	1.72	1.78	1.50	1.70
Motor Moment of Inertia		$\times 10^{-4}$ kg•m^2	3.33 (3.58)	13.9 (16.0)	19.9 (22.0)	26.0 (28.1)	46.0 (53.9)
Rated Power Rate*1		kW/s	24.6 (22.8)	20.9 (18.2)	35.0 (31.6)	50.9 (47.1)	75.2 (64.2)
Rated Angular Acceleration Rate*1		rad/s^2	8,590 (7,990)	3,880 (3,370)	4,190 (3,790)	4,420 (4,090)	4,040 (3,450)
Heat Sink Size		mm	250 × 250 × 6 (aluminum)	400 × 400 x 20 (steel)			550 × 550 × 30 (steel)
Protective Structure*3			Totally enclosed, self-cooled, IP67				
Holding Brake Specifications*4	Rated Voltage	V	24 VDC±10%				
	Capacity	W	10.0				18.5
	Holding Torque	N•m	4.5	12.7	19.6		43.1
	Coil Resistance	Ω (at 20°C)	56	59			31
	Rated Current	A (at 20°C)	0.43	0.41			0.77
	Time Required to Release Brake	ms	100				170
	Time Required to Brake	ms	80				100
Allowable Load Moment of Inertia (Motor Moment of Inertia Ratio)	Standard		15 times	5 times			
	With external regenerative resistor and dynamic brake resistor connected		15 times	10 times			
Allowable Shaft Loads*5	LF	mm	40	58			79
	Allowable Radial Load	N	490		686	980	1470
	Allowable Thrust Load	N	98		343	392	490

Note: The values in parentheses are for Servo Motors with Holding Brakes.

*1. These values are for operation in combination with a SERVOPACK when the temperature of the armature winding is 20°C. These are typical values.

*2. The rated torques are the continuous allowable torque values at a surrounding air temperature of 40°C with an aluminum or steel heat sink of the dimensions given in the table.

*3. This does not apply to the shaft opening. Protective structure specifications apply only when the special cable is used.

*4. Observe the following precautions if you use a Servomotor with a Holding Brake.
- The holding brake cannot be used to stop the Servomotor.
- The time required to release the brake and the time required to brake depend on which discharge circuit is used. Confirm that the operation delay time is appropriate for the actual equipment.
- The 24-VDC power supply is not provided by YASKAWA.

*5. The allowable shaft loads are illustrated in the following figure. Design the mechanical system so that the thrust and radial loads applied to the Servo Motor shaft end during operation do not exceed the values given in the table.

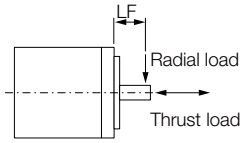

Ratings of Servo Motors (400 V Models -44D to -1ED)

Voltage			400 V				
Model SGM7G-			44D	55D	75D	1AD	1ED
Rated Output*1		kW	4.4	5.5	7.5	11	15
Rated Torque*1, *2		N•m	28.4	35.0	48.0	70.0	95.4
Instantaneous Maximum Torque*1		N•m	71.6	87.6	119	175	224
Rated Current*1		Arms	16	20.8	25.7	28.1	37.2
Instantaneous Max.Current*1		Arms	40.5	52	65	70	85
Rated Motor Speed*1		min^{-1}	1500				
Maximum Motor Speed*1		min^{-1}	3000			2000	
Torque Constant		N•m/Arms	1.93	1.80	1.92	2.76	2.86
Motor Moment of Inertia		$\times 10^{-4}$ kg•m^2	67.5 (75.4)	89 (96.9)	125 (133)	242 (261)	303 (341)
Rated Power Rate*1		kW/s	119 (107)	138 (126)	184 (173)	202 (188)	300 (267)
Rated Angular Acceleration Rate*1		rad/s^2	4,210 (3,770)	3,930 (3,610)	3840 (3,610)	2,890 (2,680)	3,150 (2,800)
Heat Sink Size		mm	550 × 550 × 30 (steel)			650 × 650 × 35 (steel)	
Protective Structure*3			Totally enclosed, self-cooled, IP67				
Holding Brake Specifications*4	Rated Voltage	V	24 VDC±10%				
	Capacity	W	18.5	25		32	35
	Holding Torque	N•m	43.1	72.6		84.3	114.6
	Coil Resistance	Ω (at 20°C)	31	23		18	17
	Rated Current	A (at 20°C)	0.77	1.05		1.33	1.46
	Time Required to Release Brake	ms	170				250
	Time Required to Brake	ms	100	80			
Allowable Load Moment of Inertia (Motor Moment of Inertia Ratio)	Standard		5 times	10 times			
	With external regenerative resistor and dynamic brake resistor connected		10 times				
Allowable Shaft Loads*5	LF	mm	79	113		116	
	Allowable Radial Load	N	1470	1764			4998
	Allowable Thrust Load	N	490	588			2156

Note: The values in parentheses are for Servo Motors with Holding Brakes.

*1. These values are for operation in combination with a SERVOPACK when the temperature of the armature winding is 20°C. These are typical values.

*2. The rated torques are the continuous allowable torque values at a surrounding air temperature of 40°C with an aluminum or steel heat sink of the dimensions given in the table.

*3. This does not apply to the shaft opening. Protective structure specifications apply only when the special cable is used.

*4. Observe the following precautions if you use a Servomotor with a Holding Brake.
- The holding brake cannot be used to stop the Servomotor.
- The time required to release the brake and the time required to brake depend on which discharge circuit is used. Confirm that the operation delay time is appropriate for the actual equipment.
- The 24-VDC power supply is not provided by YASKAWA.

*5. The allowable shaft loads are illustrated in the following figure. Design the mechanical system so that the thrust and radial loads applied to the Servo Motor shaft end during operation do not exceed the values given in the table.

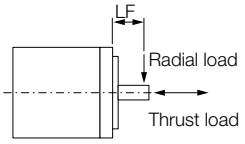

Torque-Motor Speed Characteristics (400 V Models -05D to -1ED)

A : Continuous duty zone
B : Intermittent duty zone

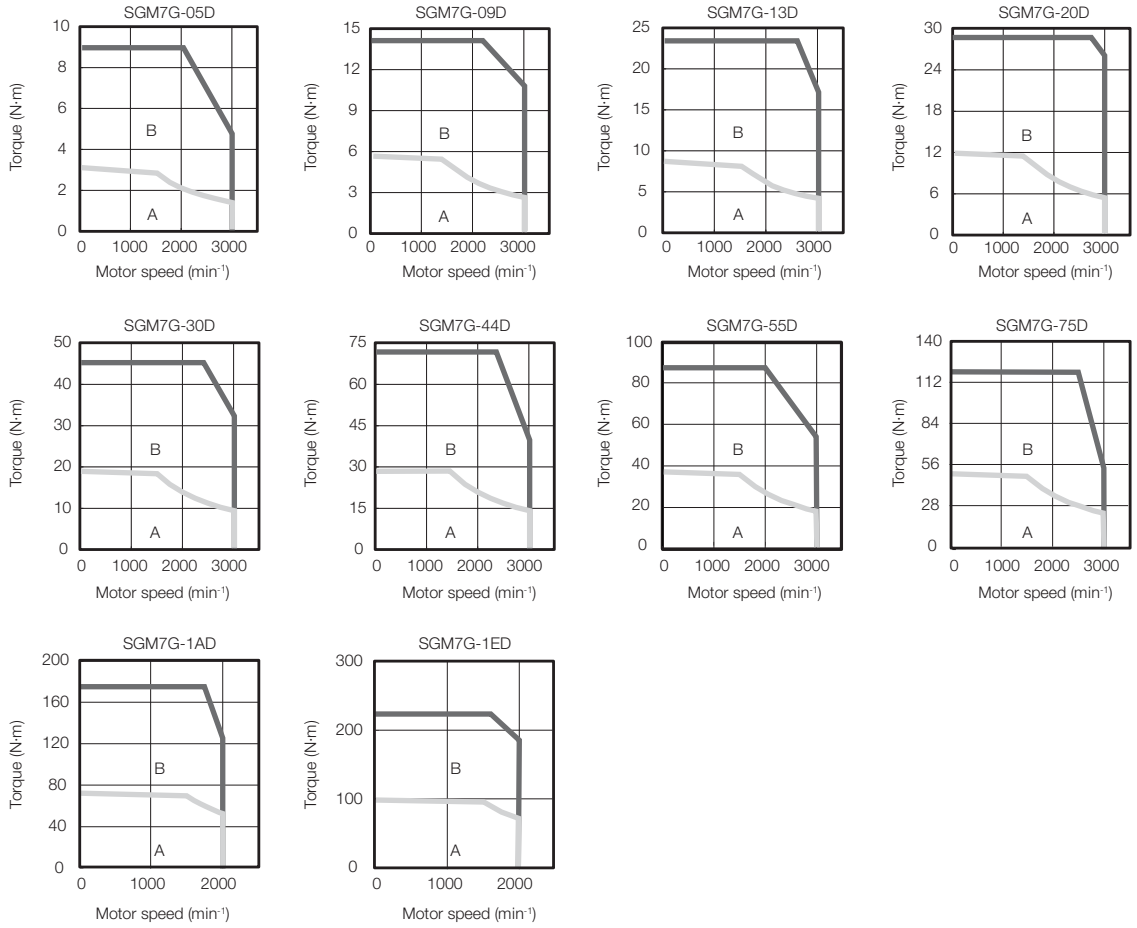

Note: 1. These values are for operation in combination with a SERVOPACK when the temperature of the armature winding is 20°C. These are typical values.

2. The characteristics in the intermittent duty zone depend on the power supply voltage. The intermittent duty zone in the graphs show the characteristics when a three-phase, 400-VAC power supply voltage is used.

3. If the effective torque is within the allowable range for the rated torque, the Servomotor can be used within the intermittent duty zone.

4. If you use a Servomotor Main Circuit Cable that exceeds 20 m, the intermittent duty zone in the torque-motor speed characteristics will become smaller because the voltage drop increases.

Ratings of High Speed Servo Motors (400 V - NON-STOCK)

Voltage			400 V					
Model SGM7G			05D	09D	13D	20D	30D	44D
Rated Output*1		kW	0.45	0.85	1.3	1.8	2.9	4.4
Rated Torque*1, *2		N•m	2.86	5.39	8.34	11.5	18.6	28.4
Instantaneous Maximum Torque*1		N•m	8.8	15	22	28.7	50	71.1
Rated Current*1		Arms	2.6	5.3	8.3	10.1	14.4	19.3
Instantaneous Max.Current*1		Arms	8.2	14	21	24	40	50
Rated Motor Speed*1		min^{-1}	1500					
Maximum Motor Speed*1		min^{-1}	5000				4500	
Allowable Continuous Motor Speed*1		min^{-1}	5000	4000			3300	3000
Torque Constant		N•m/Arms	1.13	1.12	1.09	1.27	1.36	1.58
Motor Moment of Inertia		$\times 10^{-4}$ kg•m^2	3.33 (3.58)	13.9 (16.0)	19.9 (22.0)	26.0 (28.1)	46.0 (53.9)	67.5 (75.4)
Rated Power Rate*1		kW/s	24.6 (22.8)	20.9 (18.2)	35.0 (31.6)	50.9 (47.1)	75.2 (64.2)	119 (107)
Rated Angular Acceleration Rate*1		rad/s^2	8,590 (7,990)	3,880 (3,370)	4,190 (3,790)	4,420 (4,090)	4,040 (3,450)	4,210 (3,770)
Heat Sink Size		mm	250 × 250 × 6 (aluminum)	400 × 400 x 20 (steel)				
Protective Structure*3			Totally enclosed, self-cooled, IP67					
Holding Brake Specifications*4	Rated Voltage	V	24 VDC±10%					
	Capacity	W	10.0				18.5	
	Holding Torque	N•m	4.5	12.7	19.6		43.1	
	Coil Resistance	Ω (at 20°C)	56	59			31	
	Rated Current	A (at 20°C)	0.43	0.41			0.77	
	Time Required to Release Brake	ms	100				170	
	Time Required to Brake	ms	80				100	
Allowable Load Moment of Inertia (Motor Moment of Inertia Ratio)	Standard		8 times	2 times	4 times	3 times	2 times	5 times
	With external regenerative resistor and dynamic brake resistor connected		15 times	4 times	7 times	6 times	6 times	
Allowable Shaft Loads*5	LF	mm	40	58			79	
	Allowable Radial Load	N			686	980	1470	
	Allowable Thrust Load	N	98		343	392	490	

Note: The values in parentheses are for Servo Motors with Holding Brakes.

*1. These values are for operation in combination with a SERVOPACK when the temperature of the armature winding is 20°C. These are typical values.

*2. The rated torques are the continuous allowable torque values at a surrounding air temperature of 40°C with an aluminum or steel heat sink of the dimensions given in the table.

*3. This does not apply to the shaft opening. Protective structure specifications apply only when the special cable is used.

*4. Observe the following precautions if you use a Servomotor with a Holding Brake.
- The holding brake cannot be used to stop the Servomotor.
- The time required to release the brake and the time required to brake depend on which discharge circuit is used. Confirm that the operation delay time is appropriate for the actual equipment.
- The 24-VDC power supply is not provided by YASKAWA.

*5. The allowable shaft loads are illustrated in the following figure. Design the mechanical system so that the thrust and radial loads applied to the Servo Motor shaft end during operation do not exceed the values given in the table.

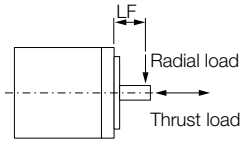

Torque-Motor Speed Characteristics (High Speed Models - 400V NON-STOCK)

A : Continuous duty zone
B : Intermittent duty zone

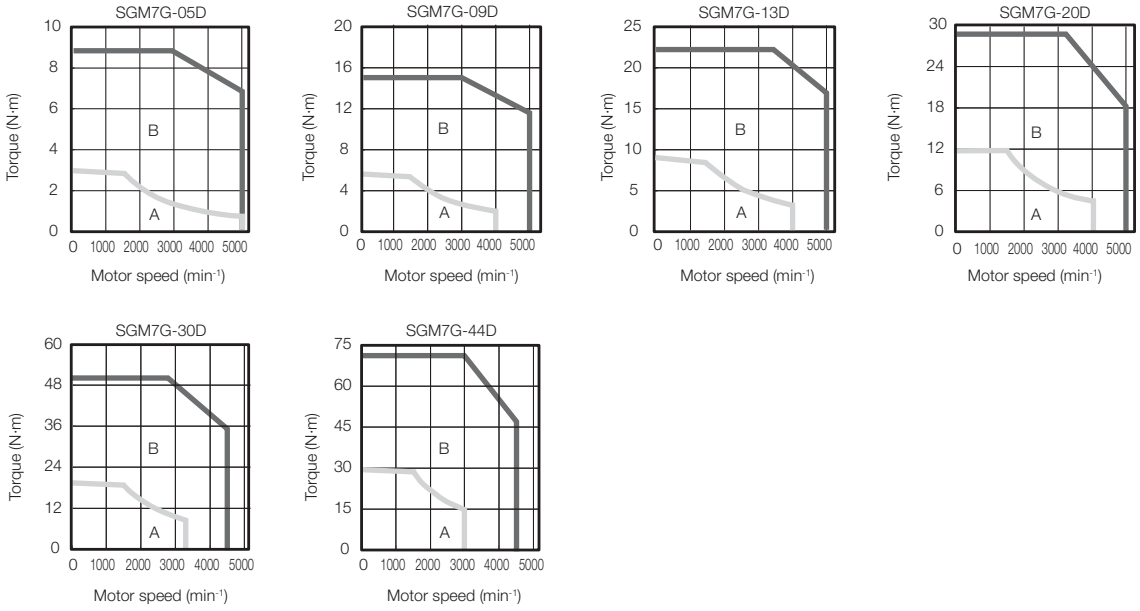

Note: 1. These values are for operation in combination with a SERVOPACK when the temperature of the armature winding is 20°C. These are typical values.
2. The characteristics in the intermittent duty zone depend on the power supply voltage. The intermittent duty zone in the graphs show the characteristics when a three-phase, 400-VAC power supply voltage is used.
3. If the effective torque is within the allowable range for the rated torque, the Servomotor can be used within the intermittent duty zone.
4. If you use a Servomotor Main Circuit Cable that exceeds 20 m, the intermittent duty zone in the torque-motor speed characteristics will become smaller because the voltage drop increases.

Ratings of Gear Motors (200 V Models)

Gear Motor Model Number S7G____	Base Servo Motor Model SGM7G-	Gear Ratio	Gearing Efficiency *1	Rated Speed (RPM)	Max Speed (RPM)	Rated Torque (Nm)*2	Peak Torque (Nm)*2	Motor Inertia ($x10^{-4}$ kg-m^2)	Gearhead Inertia ($x10^{-4}$ kg-m^2)	Allow-able Radial Load (N)	Allow-able Axial Load (N)	Back-lash (arc-min)	Class
05A□ -VL070-03	05A7D6□	3:1	95	500	1000	8.15	25.4	3.330 (3.580)	0.53	1200	1100	5	IP65
05A□ -VL070-05		5:1		300	600	13.6	42.4		0.46				
05A□ -VL090-10		10:1		150	300	27.2	84.7		0.70	2400	2200		
05A□ -VL090-25		25:1	90	60	120	64.4	125*3		0.74				
05A□ -VL120-50		50:1		30	60	129	330*3		0.76	4300	3900		
09A□ -VL090-03	09A7DK□	3:1	95	500	1000	15.4	40.5	13.90 (16.00)	1.1	2400	2200		
09A□ -VL090-05		5:1		300	600	25.6	67.5		0.80				
09A□ -VL090-10		10:1		150	300	51.2	80.0*3		0.70				
09A□ -VL120-25		25:1	90	60	120	121	320		1.1	4300	3900		
09A□ -VL155-50		50:1		30	60	243	639		1.1	9100	8200		
13A□ -VL090-03	13A7DK□	3:1	95	500	1000	23.8	66.4	19.90 (22.00)	2.9	2400	1100		
13A□ -VL090-05		5:1		300	600	39.6	111		2.6				
13A□ -VL120-10		10:1		150	300	79.2	221		2.6	4300	3900		
13A□ -VL120-25		25:1	90	60	120	188	330*3		2.8				
13A□ -VL155-50		50:1		30	60	375	700*3		2.8	9100	8200		
20A□ -VL090-03	20A7D6□	3:1	95	500	1000	32.8	81.8	26.00 (28.10	2.9	2400	2200		
20A□ -VL090-05		5:1		300	600	54.6	136		2.6				
20A□ -VL120-10		10:1		150	300	109	225*3		2.6	4300	3900		
20A□ -VL155-25		25:1	90	60	120	259	646		4.1	9100	8200		
20A□ -VL205-50		50:1		30	60	518	1292		3.8	15000	14000		
30A□ -VL120-03	30A7D6□	3:1	95	500	1000	53.0	154	46.00 (53.90)	12.0	4300	3900		
30A□ -VL120-05		5:1		300	600	88.4	257		9.5				
30A□ -VL155-10		10:1		150	300	177	51‘3		9.6	9100	8200		
30A□ -VL155-25		25:1	90	60	120	360*3	700*3		10.0				
30A□ -VL205-50		50:1		30	60	750*3	1400*3		10.0	15000	14000		
44A□ -VL120-03	44A7D6□	3:1	95	500	1000	80.9	204	67.50 (75.40)	12.0	4300	3900		
44A□ -VL120-05		5:1		300	600	135	340		9.5				
44A□ -VL205-10		10:1		150	300	270	680		12.0	15000	14000		
44A□ -VL205-25		25:1	90	60	120	639	1400*3		14.0				
44A□ -VL235-50		50:1		20*3	40*3	1306	2300*3		12.0				
55A□ -VL155-03	55A7D6□	3:1	95	500	1000	99.8	291	89.00 (96.90)	35.0	9100	8200		
55A□ -VL155-05		5:1		300	600	166	485		27.0				
55A□ -VL205-10		10:1		150	300	333	969		27.0	15000	14000		
55A□ -VL205-25		25:1	90	60	120	788	1400*3		29.0				
55A□ -VL235-50		50:1		20*3	40*3	1610	2300*3		26.0				
75A□ -VL155-03	75A7D6□	3:1	95	500	1000	137	339	125.0 (133.0)	35.0	9100	8200		
75A□ -VL155-05		5:1		300	600	228	565		27.0				
75A□ -VL205-10		10:1		150	300	456	970*3		27.0	15000	14000		
75A□ -VL235-25		25:1	90	40*3	80*3	1104	2300*3		33.0				
75A□ -VL235-50		50:1		20*3	40*3	1500*3	2300*3		26.0				

Note: The values in parentheses are for Servo Motors with Holding Brakes (indicated by value of □ in model numbers).

*1. The gear efficiency depends on operating conditions such as the output torque, motor speed, and temperature.

*2. The gear motor output torque is expressed by the following formula: Output Torque = (Servo Motor Output Torque) x (Gearing Ratio) x (Gearing Efficiency). The values in the table are typical values for the rated torque, rated motor speed, and a surrounding air temperature of 25°C. They are reference values only.

*3. The output torque of the gear motor is limited by the mechanical limit of the gear head. Operation above this limit could result in premature failure of the gear motor.



Important

During operation of the gear motor, losses due to inefficiencies of the gearing mechanism are generated. The losses vary as the conditions for gear motor torque and speed change. Temperature rise can vary based on the mechanical inefficiencies and the heat dissipation conditions. For heat dissipation conditions, check the gear and motor temperatures with the actual equipment. If operating temperatures are too high, implement the following measures.

- Decrease the load ratio.
- Change the heat dissipation conditions.
- Use forced-air cooling for the motor with a cooling fan or other means.

Servo Motor Overload Protection Characteristics (200 V Models)

The overload detection level is set for hot start conditions with a Servo Motor surrounding air temperature of 40°C.

SGM7G-03 and -05

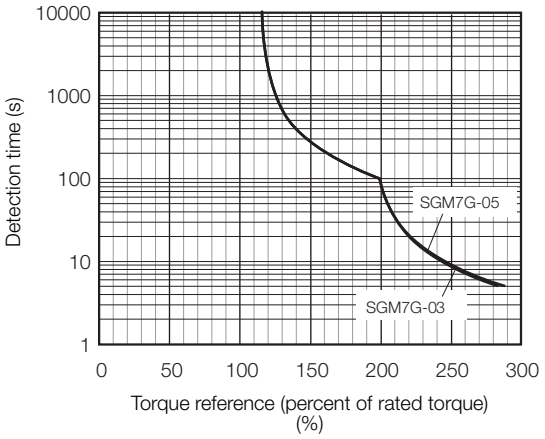

SGM7G-09, -13, and -20

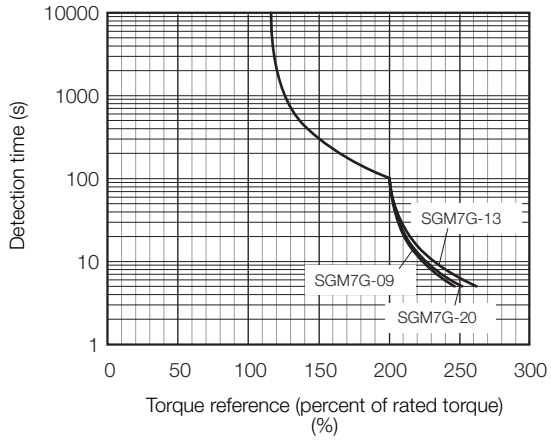

SGM7G-30, -44, -55, and -75

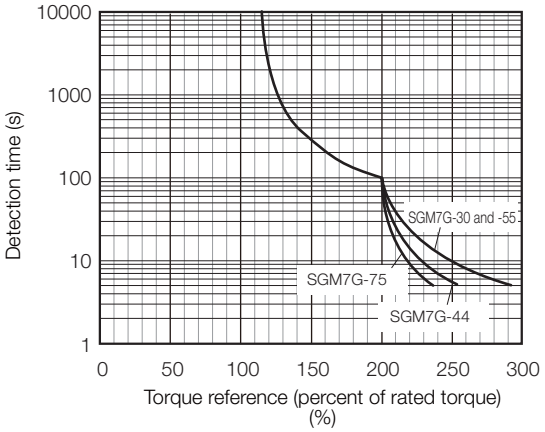

SGM7G-1A and -1E

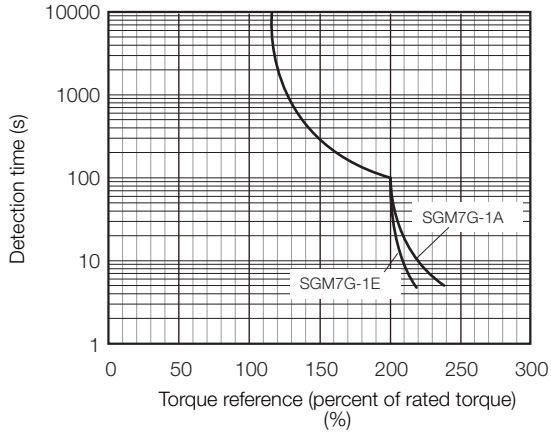

Note: The above overload protection characteristics do not mean that you can perform continuous duty operation with an output of 100% or higher. Use the Servo Motor so that the effective torque remains within the continuous duty zone given in *Torque-Motor Speed Characteristics (200 V Models -03A to -20A)* on page 129 and *Torque-Motor Speed Characteristics (200 V Models -30A to -1EA)* on page 131

Servo Motor Overload Protection Characteristics (400 V Models)

The overload detection level is set for hot start conditions with a Servo Motor surrounding air temperature of 40°C.

SGM7G-05

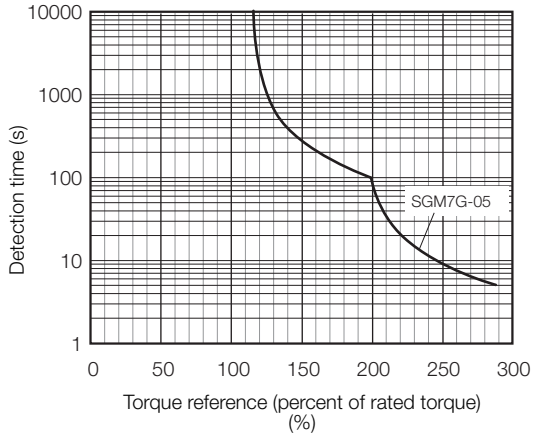

SGM7G-09, -13, and -20

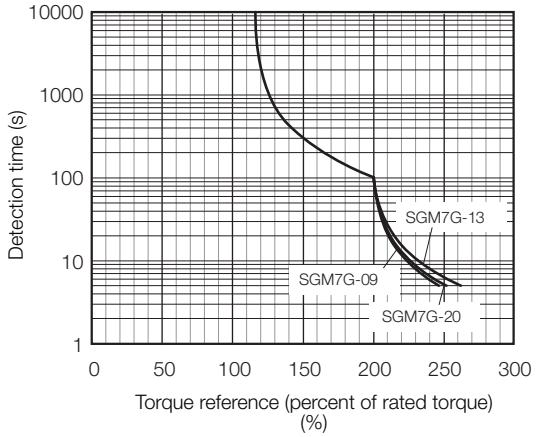

SGM7G-30, -44, -55, and -75

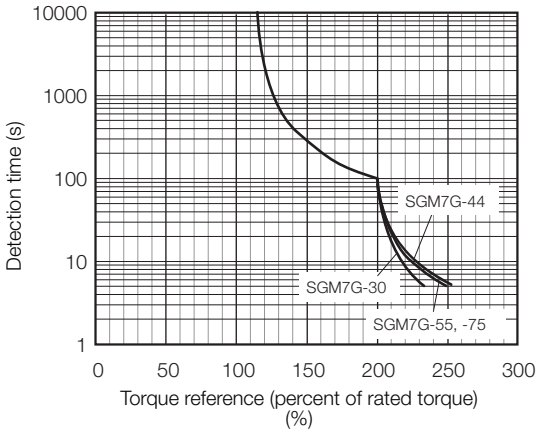

SGM7G-1A and -1E

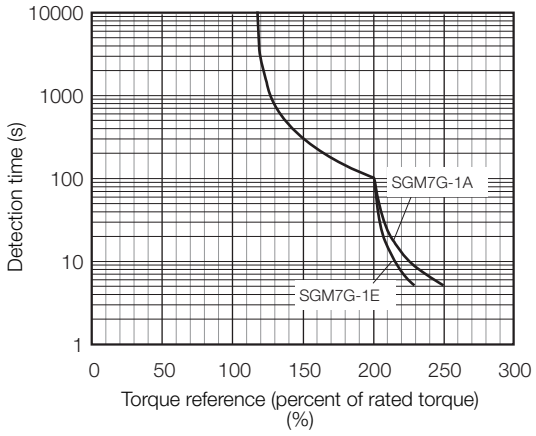

Note: The above overload protection characteristics do not mean that you can perform continuous duty operation with an output of 100% or higher. Use the Servo Motor so that the effective torque remains within the continuous duty zone given in *Torque-Motor Speed Characteristics (400 V Models -05D to -1ED)* on page 134.

Servo Motor Overload Protection Characteristics (400 V High Speed Models)

The overload detection level is set for hot start conditions with a Servo Motor surrounding air temperature of 40°C.

SGM7G-05

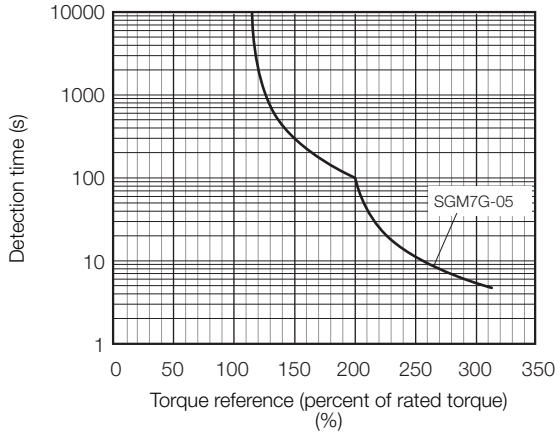

SGM7G-09, -13, and -20

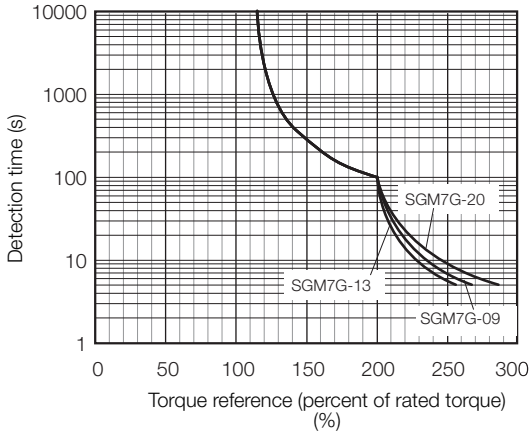

SGM7G-30 and -44

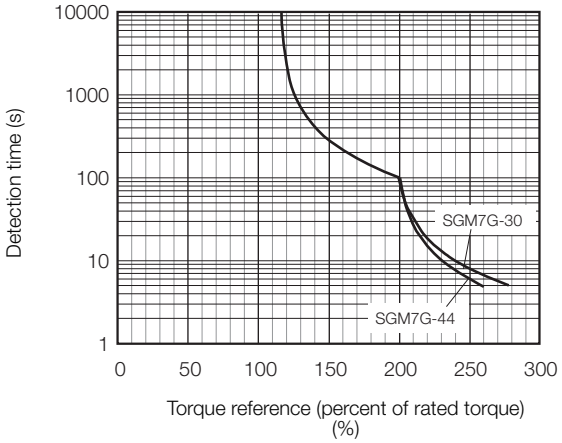

Note: The above overload protection characteristics do not mean that you can perform continuous duty operation with an output of 100% or higher. Use the Servo Motor so that the effective torque remains within the continuous duty zone given in *Torque-Motor Speed Characteristics (High Speed Models - 400V NON-STOCK)* on page 136.

Servo Motor Heat Dissipation Conditions

The Servo Motor ratings are the continuous allowable values at a surrounding air temperature of 40°C when a heat sink is installed on the Servo Motor. If the Servo Motor is mounted on a small device component, the Servo Motor temperature may rise considerably because the surface for heat dissipation becomes smaller. Refer to the following graphs for the relation between the heat sink size and derating rate.

When using Servo Motors with derating, change the detection timing of overload warnings and overload alarms by referring to the motor overload detection level described in the following manual.

📖 *Σ-7-Series AC Servo Drive Rotary Servo Motor Product Manual* (Manual No.: SIEP S800001 36)

Note: The derating rates are applicable only when the average motor speed is less than or equal to the rated motor speed. If the average motor speed exceeds the rated motor speed, consult with your Yaskawa representative.

> Important
>
> The actual temperature rise depends on how the heat sink (i.e., the Servo Motor mounting section) is attached to the installation surface, what material is used for the Servo Motor mounting section, and the motor speed. Always check the Servo Motor temperature with the actual equipment.

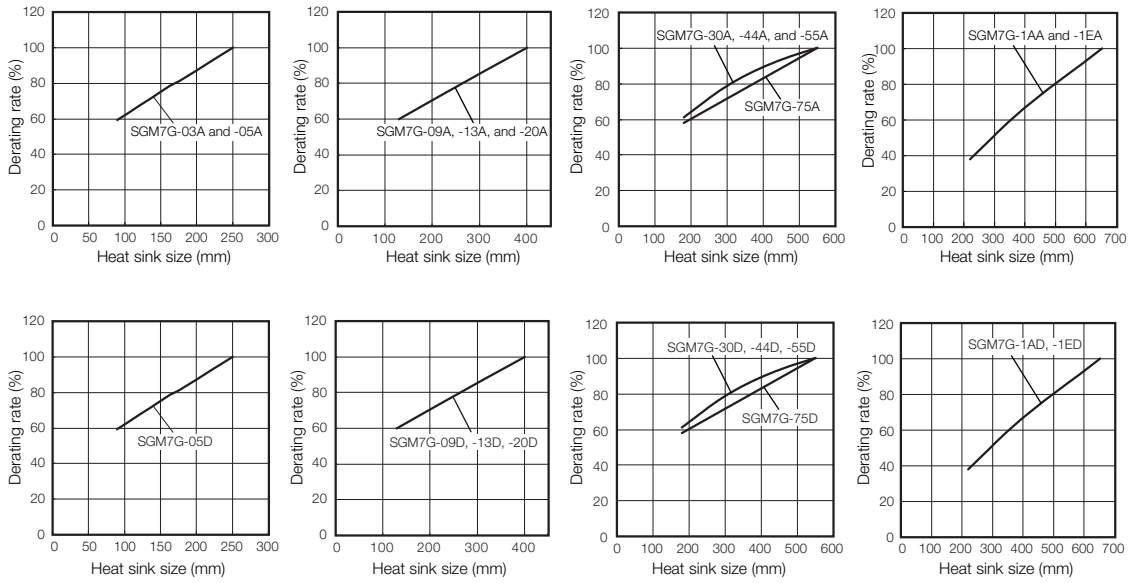

Applications Where the Surrounding Air Temperature of the Servo Motor Exceeds 40°C

The Servo Motor ratings are the continuous allowable values at a surrounding air temperature of 40°C. If you use a Servo Motor at a surrounding air temperature that exceeds 40°C (60°C max.), apply a suitable derating rate from the following graphs.

When using Servo Motors with derating, change the detection timing of overload warnings and overload alarms by referring to the motor overload detection level described in the following manual.

📖 *Σ-7-Series AC Servo Drive Rotary Servo Motor Product Manual* (Manual No.: SIEP S800001 36)

Note: 1. Use the combination of the SERVOPACK and Servo Motor so that the derating conditions are satisfied for both the SERVOPACK and Servo Motor.

2. The derating rates are applicable only when the average motor speed is less than or equal to the rated motor speed. If the average motor speed exceeds the rated motor speed, consult with your Yaskawa representative.

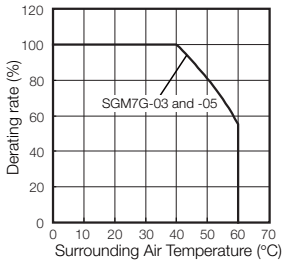

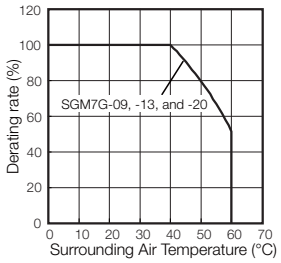

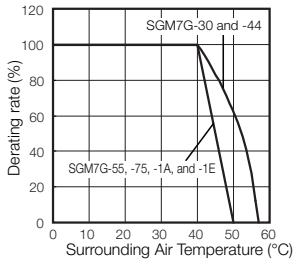

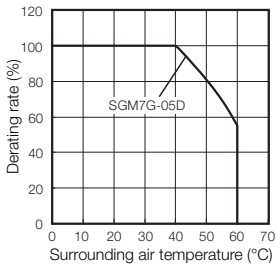

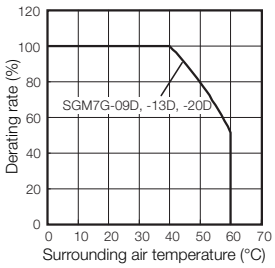

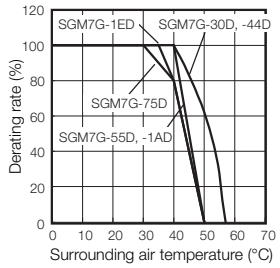

Applications Where the Altitude of the Servo Motor Exceeds 1,000 m

The Servo Motor ratings are the continuous allowable values at an altitude of 1,000 m or less. If you use a Servo Motor at an altitude that exceeds 1,000 m (2,000 m max.), the heat dissipation effect of the air is reduced. Apply the appropriate derating rate from the following graphs.

When using Servo Motors with derating, change the detection timing of overload warnings and overload alarms by referring to the motor overload detection level described in the following manual.

📖 *Σ-7-Series AC Servo Drive Rotary Servo Motor Product Manual* (Manual No.: SIEP S800001 36)

Note: 1. Use the combination of the SERVOPACK and Servo Motor so that the derating conditions are satisfied for both the SERVOPACK and Servo Motor.

2. The derating rates are applicable only when the average motor speed is less than or equal to the rated motor speed. If the average motor speed exceeds the rated motor speed, consult with your Yaskawa representative.

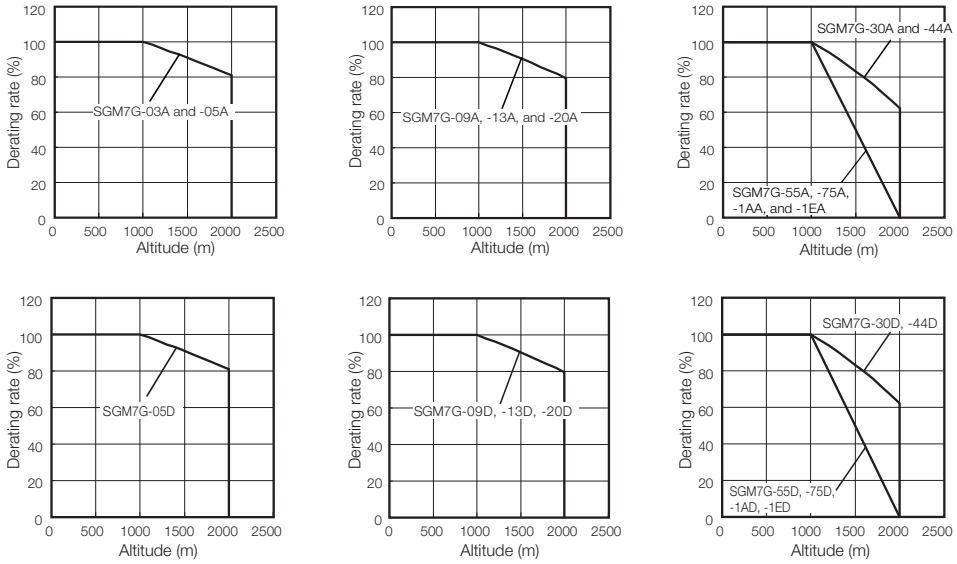

External Dimensions

200V Servo Motors without Holding Brakes

◆ SGM7G-03A and -05A

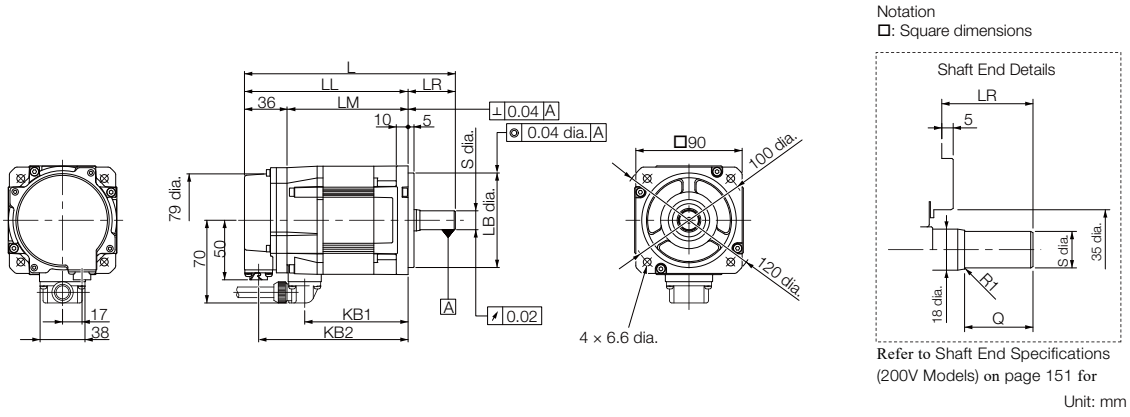

Refer to Shaft End Specifications (200V Models) on page 151 for

Unit: mm

Model SGM7G-	L	LL	LM	LR	KB1	KB2	KL1	Flange Dimensions			
								LA	LB	LC	LE
03A□ AK1	166*	126	90	40*	75	114	70	100	$80^{\ 0}_{-0.030}$	90	5
05A□ A21	179	139	103	40	88	127	70	100	$80^{\ 0}_{-0.030}$	90	5

Model SGM7G-	Flange Dimensions			Shaft End Dimensions		Approx. Mass [kg]
	LG	LH	LZ	S	Q	
03A□ AK1	10	120	6.6	$14^{\ 0}_{-0.011}$*	30*	2.6
05A□ A21	10	120	6.6	$16^{\ 0}_{-0.011}$	30	3.2

Note: Servo Motors with Oil Seals have the same dimensions.

* The L, LR, S, and Q dimensions of these Servo Motors are different from those of the S-V-series SGMGV Servo Motors. Models that have the same installation dimensions as the SGMGV Servo Motors are also available. Contact your Yaskawa representative for details.
Refer to the following section for information on connectors.

☞ ◆ *SGM7G-03A and -05A without Holding Brakes* (page 165)

◆ SGM7G-09A to -75A

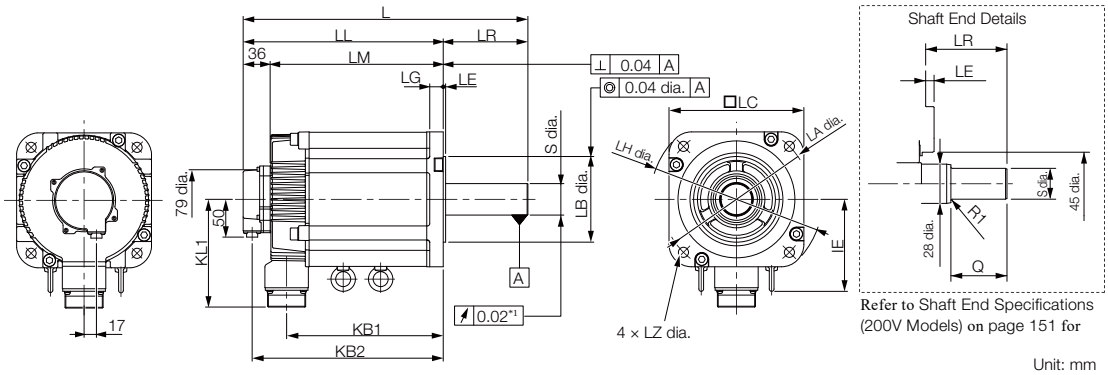

Model SGM7G-	L	LL	LM	LR	KB1	KB2	IE	KL1	Flange Dimensions			
									LA	LB	LC	LE
09A□ AK1	195	137	101	58	83	125	-	104	145	$110^{\ 0}_{-0.035}$	130	6
13A□ AK1	211	153	117	58	99	141	-	104	145	$110^{\ 0}_{-0.035}$	130	6
20A□ A21	229	171	135	58	117	159	-	104	145	$110^{\ 0}_{-0.035}$	130	6
30A□ A21	239	160	124	79	108	148	-	134	200	$114.3^{\ 0}_{-0.025}$	180	3.2
44A□ A21	263	184	148	79	132	172	-	134	200	$114.3^{\ 0}_{-0.025}$	180	3.2
55A□ A21	334	221	185	113	163	209	123	144	200	$114.3^{\ 0}_{-0.025}$	180	3.2
75A□ A21	380	267	231	113	209	255	123	144	200	$114.3^{\ 0}_{-0.025}$	180	3.2

Model SGM7G-	Flange Dimensions			Shaft End Dimensions		Approx. Mass [kg]
	LG	LH	LZ	S	Q	
09A□ AK1	12	165	9	$19^{\ 0}_{-0.013}$	40	5.5
13A□ AK1	12	165	9	$22^{\ 0}_{-0.013}$	40	7.1
20A□ A21	12	165	9	$24^{\ 0}_{-0.013}$	40	8.6
30A□ A21	18	230	13.5	$35^{\ +0.01}_{\ 0}$	76	13.5
44A□ A21	18	230	13.5	$35^{\ +0.01}_{\ 0}$	76	17.5
55A□ A21	18	230	13.5	$42^{\ 0}_{-0.016}$	110	21.5
75A□ A21	18	230	13.5	$42^{\ 0}_{-0.016}$	110	29.5

Note: Servo Motors with Oil Seals have the same dimensions.

*1. This is 0.04 for the SGM7G-55 or SGM7G-75.

◆ SGM7G-1AA and -1EA

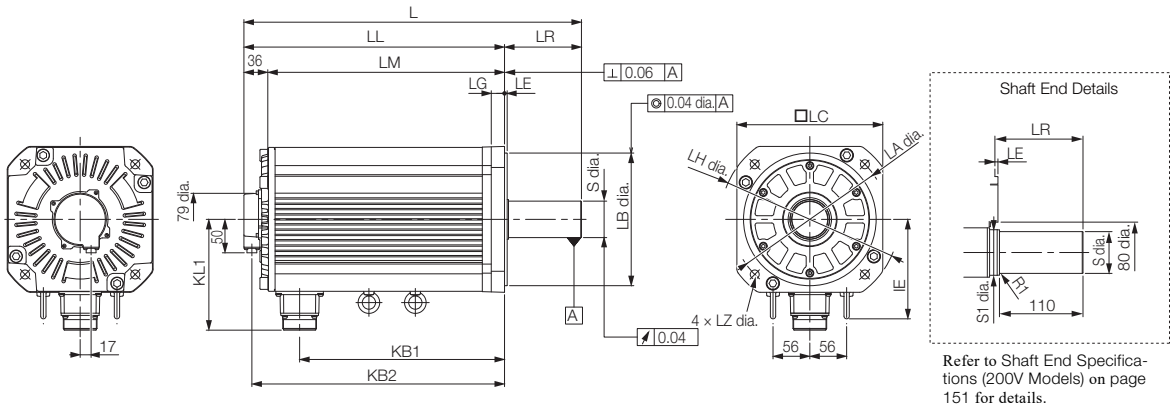

Refer to Shaft End Specifications (200V Models) on page 151 for details.

Unit: mm

Model SGM7G-	L	LL	LM	LR	KB1	KB2	IE	KL1	Flange Dimensions			
									LA	LB	LC	LE
1AA□ A21	447	331	295	116	247	319	150	168	235	$200^{\ 0}_{-0.046}$	220	4
1EA□ A21	509	393	357	116	309	381	150	168	235	$200^{\ 0}_{-0.046}$	220	4

Model SGM7G-	Flange Dimensions			Shaft End Dimensions		Approx. Mass [kg]
	LG	LH	LZ	S	Q	
1AA□ A21	20	270	13.5	$42^{\ 0}_{-0.016}$	50	57
1EA□ A21	20	270	13.5	$55^{+0.030}_{+0.011}$	60	67

Note: Servo Motors with Oil Seals have the same dimensions.
Refer to the following section for information on connectors.

☞ ◆ *SGM7G-09A to -1EA without Holding Brakes* (page 165)

200V Servo Motors with Holding Brakes

◆ SGM7G-03A and -05A

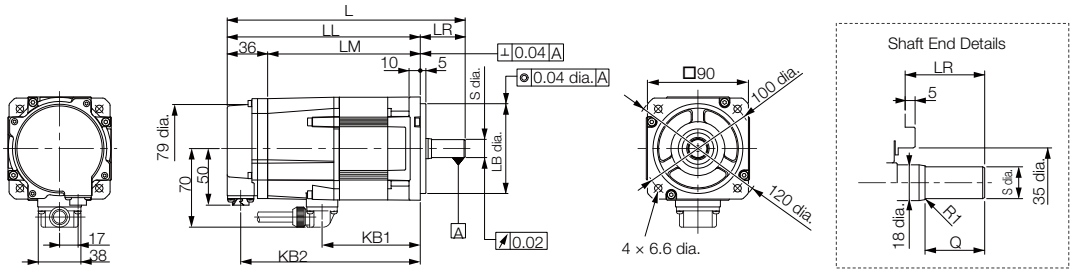

Refer to Shaft End Specifications (200V Models) on page 151 for details.

Unit: mm

Model SGM7G-	L	LL	LM	LR	KB1	KB2	KL1	Flange Dimensions			
								LA	LB	LC	LE
03A□ AKC	163	159	123	37	75	147	70	100	$80^{\ 0}_{-0.030}$	90	5
05A□ A2C	212	172	136	40	88	160	70	100	$80^{\ 0}_{-0.030}$	90	5

Model SGM7G-	Flange Dimensions			Shaft End Dimensions		Approx. Mass [kg]
	LG	LH	LZ	S	Q	
03A□ AKC	10	120	6.6	$14^{\ 0}_{-0.011}$*	25	3.6
05A□ A2C	10	120	6.6	$16^{\ 0}_{-0.011}$	30	4.2

Note: Servo Motors with Oil Seals have the same dimensions.
Refer to the following section for information on connectors.

☞ ◆ *SGM7G-03A and -05A with Holding Brakes* (page 166)

◆ SGM7G-09A to -75A

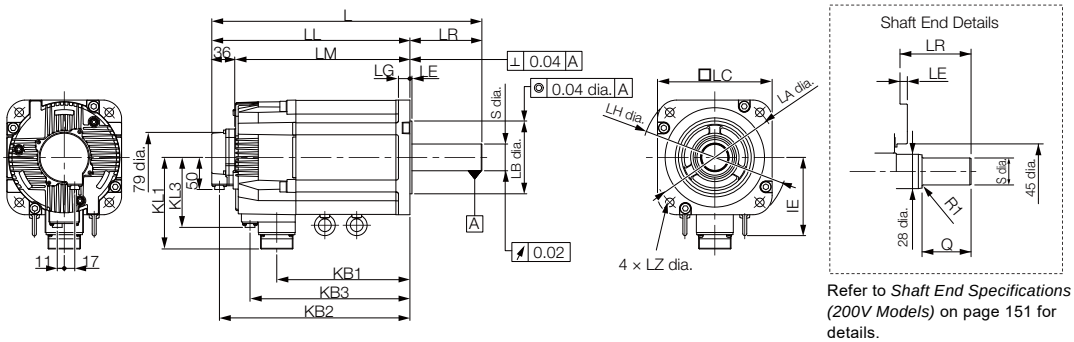

Refer to *Shaft End Specifications (200V Models)* on page 151 for details.

Unit: mm

Model SGM7G-	L	LL	LM	LR	KB1	KB2	KB3	IE	KL1	KL3	Flange Dimensions			
											LA	LB	LC	LE
09A□ AKC	231	173	137	58	83	161	115	-	104	80	145	$110^{\ 0}_{-0.035}$	130	6
13A□ AKC	247	189	153	58	99	177	131	-	104	80	145	$110^{\ 0}_{-0.035}$	130	6
20A□ A2C	265	207	171	58	117	195	149	-	104	80	145	$110^{\ 0}_{-0.035}$	130	6
30A□ A2C	287	208	172	79	108	196	148	-	134	110	200	$114.3^{\ 0}_{-0.025}$	180	3.2
44A□ A2C	311	232	196	79	132	220	172	-	134	110	200	$114.3^{\ 0}_{-0.025}$	180	3.2
55A□ A2C	378	265	229	113	163	253	205	123	144	110	200	$114.3^{\ 0}_{-0.025}$	180	3.2
75A□ A2C	424	311	275	113	209	299	251	123	144	110	200	$114.3^{\ 0}_{-0.025}$	180	3.2

Model SGM7G-	Flange Dimensions			Shaft End Dimensions		Approx. Mass [kg]
	LG	LH	LZ	S	Q	
09A□ AKC	12	165	9	$19^{\ 0}_{-0.013}$	40	7.5
13A□ AKC	12	165	9	$22^{\ 0}_{-0.013}$	40	9.0
20A□ A2C	12	165	9	$24^{\ 0}_{-0.013}$	40	11.0
30A□ A2C	18	230	13.5	$35^{\ +0.01}_{\ 0}$	76	19.5
44A□ A2C	18	230	13.5	$35^{\ +0.01}_{\ 0}$	76	23.5
55A□ A2C	18	230	13.5	$42^{\ 0}_{-0.016}$	110	27.5
75A□ A2C	18	230	13.5	$42^{\ 0}_{-0.016}$	110	35.0

Note: Servo Motors with Oil Seals have the same dimensions.

◆ SGM7G-1AA, 1EA

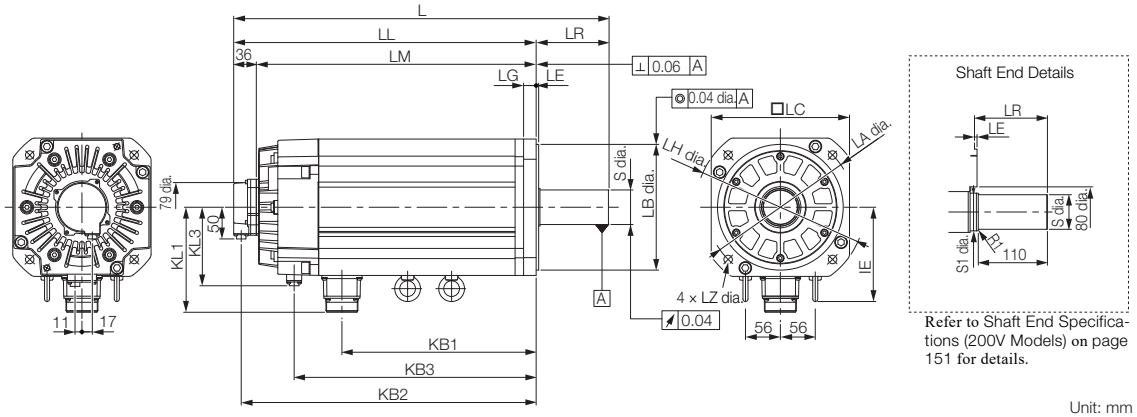

Refer to Shaft End Specifications (200V Models) on page 151 for details.

Unit: mm

Model SGM7G-	L	LL	LM	LR	KB1	KB2	KB3	IE	KL1	KL3	Flange Dimensions			
											LA	LB	LC	LE
1AA□ A2C	498	382	346	116	247	370	315	150	168	125	235	$200^{\ 0}_{-0.046}$	220	4
1EA□ A2C	598	482	446	116	309	470	385	150	168	125	235	$200^{\ 0}_{-0.046}$	220	4

Model SGM7G-	Flange Dimensions			Shaft End Dimensions		Approx. Mass [kg]
	LG	LH	LZ	S	Q	
1AA□ A2C	20	270	13.5	$42^{\ 0}_{-0.016}$	50	65
1AA□ A2C	20	270	13.5	$55^{+0.030}_{+0.011}$	60	85

Note: Servo Motors with Oil Seals have the same dimensions.

Refer to the following section for information on connectors.

☞ ◆ *SGM7G-09A to -1EA with Holding Brakes* (page 166)

Shaft End Specifications (200V Models)

◆ SGM7G-□□□□□□□

Code	Specification
2	Straight without key
6	Straight with key and tap for one location (Key slot is JIS B1301-1996 fastening type.)
K	Straight with key and tap with same shaft diameter as Sigma-5 equivalent (for models 03, 09, and 13)

Shaft End Details		Servo Motor Model SGM7G-										
		03	05	09	13	20	30	44	55	75	1A	1E
Code: 2 (Straight without Key)												
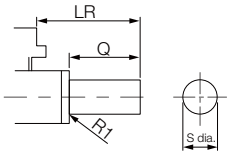	LR	40	40	58	58	58	79	79	113	113	116	116
	Q	30	30	40	40	40	76	76	110	110	110	110
	S	$16^{0}_{-0.011}$	$16^{0}_{-0.011}$	$24^{0}_{-0.013}$	$24^{0}_{-0.013}$	$24^{0}_{-0.013}$	$35^{+0.01}_{0}$	$35^{+0.01}_{0}$	$42^{0}_{-0.016}$	$42^{0}_{-0.016}$	$42^{0}_{-0.016}$	$55^{+0.030}_{+0.011}$
Code: 6 or K (Straight with Key and Tap)												
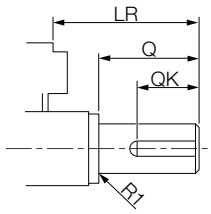	LR	40	40	58	58	58	79	79	113	113	116	116
	Q	30	30	40	40	40	76	76	110	110	110	110
	QK	20	20	25	25	25	60	60	90	90	90	90
	S (Code 6)	$16^{0}_{-0.011}$	$16^{0}_{-0.011}$	$24^{0}_{-0.013}$	$24^{0}_{-0.013}$	$24^{0}_{-0.013}$	$35^{+0.01}_{0}$	$35^{+0.01}_{0}$	$42^{0}_{-0.016}$	$42^{0}_{-0.016}$	$42^{0}_{-0.016}$	$55^{+0.030}_{+0.011}$
	S (Code K)	$14^{0}_{-0.011}$	N/A	$19^{0}_{-0.013}$	$22^{0}_{-0.013}$	N/A	N/A	N/A	N/A	N/A	N/A	N/A
	W	5	5	5	6	8	10	10	12	12	12	16
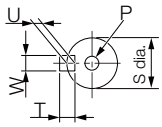	T	5	5	5	6	7	8	8	8	8	8	10
	U	3	3	3	3.5	4	5	5	5	5	5	6
	P	M5 screw, Depth: 12					M12 screw, Depth: 25		M16 screw, Depth: 32			M20 screw, Depth: 40

400V Servo Motors

◆ SGM7G-05D

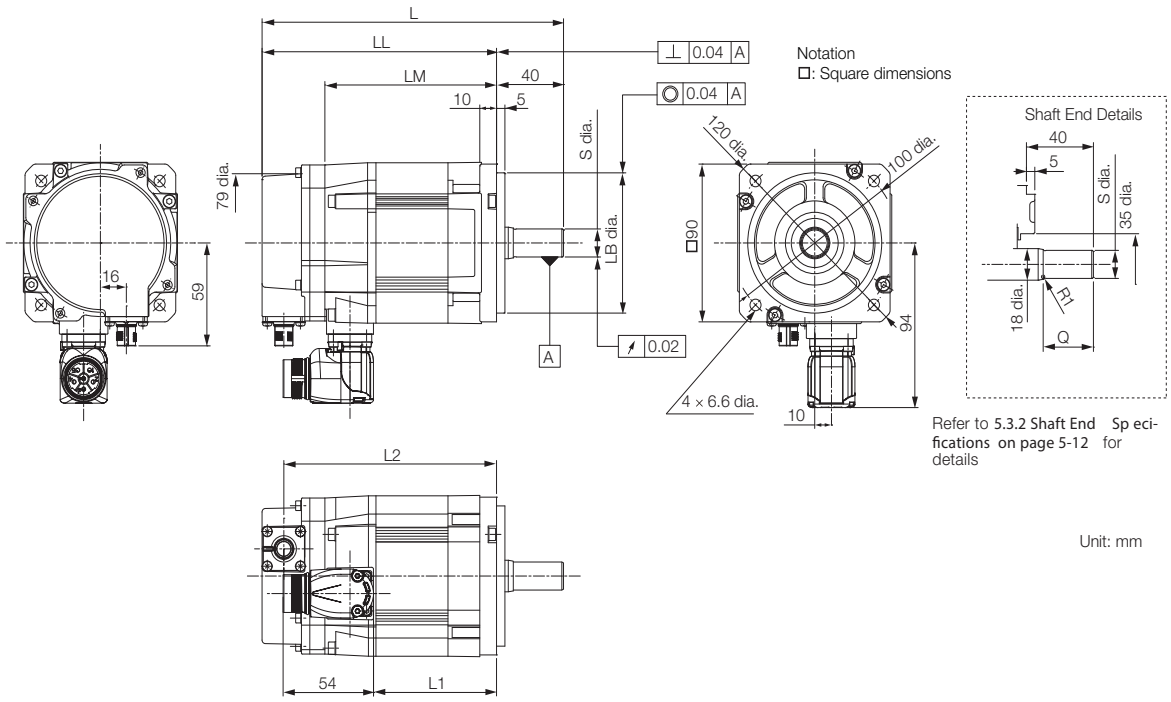

Model SGM7G-	L	LL	LM	L1	L2	LB	Shaft End Dimensions		Approx. Mass [kg]
							S	Q	
05D□ F2□	181 (214)	141 (174)	103 (136)	74	127 (161)	$80^{0}_{-0.030}$	$16^{0}_{-0.011}$	30	3.3 (4.3)

Note: Servo Motors with Oil Seals have the same dimensions. Values in parentheses are for motors with holding brakes. Refer to the following section for information on connectors.

☞ ◆ *SGM7G-03A and -05A with Holding Brakes* (page 166)

◆ SGM7G-09D, -13D, -20D

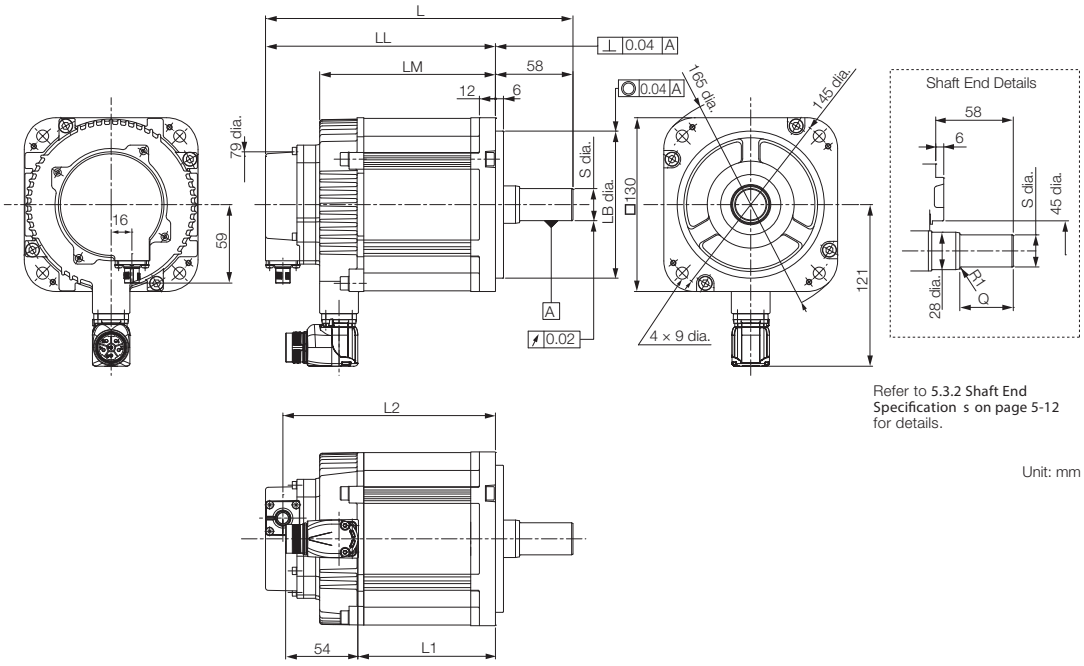

Refer to **5.3.2 Shaft End Specification s on page 5-12** for details.

Unit: mm

Model SGM7G-	L	LL	LM	L1	L2	LB	Shaft End Dimensions		Approx. Mass [kg]
							S	Q	
09D□ FK□	197 (233)	139 (175)	101 (137)	69	125 (161)	$110^{0}_{-0.035}$	$19^{0}_{-0.013}$	40	5.6 (7.6)
13D□ FK□	213 (249)	155 (191)	117 (153)	85	141 (177)	$110^{0}_{-0.035}$	$22^{0}_{-0.013}$	40	7.2 (9.1)
20D□ F2□	231 (267)	173 (209)	135 (171)	103	159 (195)	$110^{0}_{-0.035}$	$24^{0}_{-0.013}$	40	8.7 (11.1)

Note: Servo Motors with Oil Seals have the same dimensions. Values in parentheses are for motors with holding brakes. Refer to the following section for information on connectors.

☞ ◆ *SGM7G-03A and -05A with Holding Brakes* (page 166)

◆ SGM7G-30D, -44D, -55D, -75

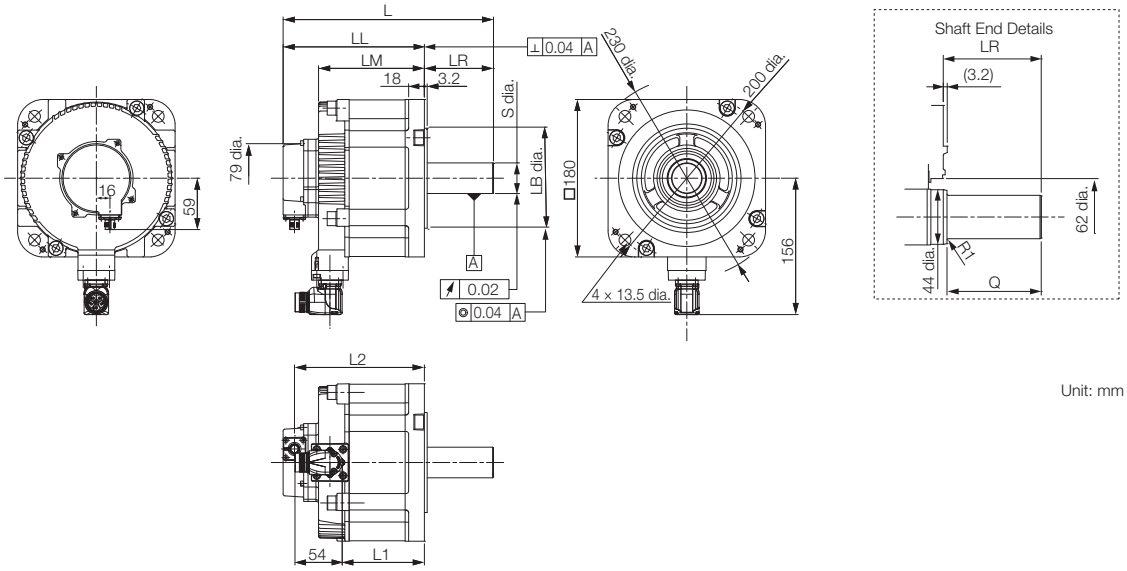

Unit: mm

Model SGM7G-	L	LL	LM	L1	L2	LR	LB	Shaft End Dimensions		Approx. Mass [kg]
								S	Q	
30D□ F2□	241 (289)	162 (210)	124 (172)	94	149 (197)	79	$114.3^{\ 0}_{-0.035}$	$35^{+0.01}_{-0}$	76	13.6 (19.6)
44D□ F2□	265 (313)	186 (234)	148 (196)	118	173 (221)	79	$114.3^{\ 0}_{-0.025}$	$35^{+0.01}_{-0}$	76	18.0 (24.0)
44D□ R2□	265 (313)	186 (234)	148 (196)	112	173 (221)	79	$114.3^{\ 0}_{-0.025}$	$35^{+0.01}_{-0}$	76	18.0 (24.0)
55D□ F2□	336 (380)	223 (267)	185 (229)	143	210 (254)	113	$114.3^{\ 0}_{-0.025}$	$42^{\ 0}_{-0.016}$	76	22.0 (28.0)
75D□ F2□	382 (426)	269 (313)	231 (275)	189	256 (300)	113	$114.3^{\ 0}_{-0.025}$	$42^{\ 0}_{-0.016}$	76	30.0 (35.5)

Note: Servo Motors with Oil Seals have the same dimensions. Values in parentheses are for motors with holding brakes. Refer to the following section for information on connectors.

☞ ◆ *SGM7G-03A and -05A with Holding Brakes* (page 166)

◆ SGM7G-1AD, -1ED

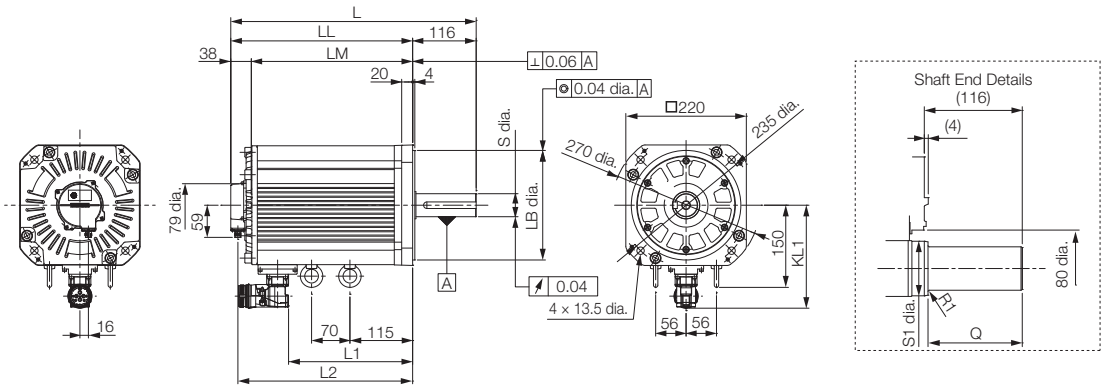

Unit: mm

Model SGM7G-	L	LL	LM	L1	L2	LB	Shaft End Dimensions		Approx. Mass [kg]
							S	Q	
1AD□ F2□	449 (500)	333 (384)	295 (346)	227	319 (371)	$200^{0}_{-0.046}$*	188	$42^{0}_{-0.016}$	50
1ED□ F2□	511 (600)	395 (484)	357 (446)	289	382 (470)	$200^{0}_{-0.046}$*	188	$55^{+0.030}_{+0.011}$	60

Note: Servo Motors with Oil Seals have the same dimensions. Values in parentheses are for motors with holding brakes. Refer to the following section for information on connectors.

☞ ◆ *SGM7G-03A and -05A with Holding Brakes* (page 166)

Shaft End Specifications (400V Models)

◆ SGM7G-□□□□□□□

Code	Specification
2 or S	Straight without key
6 or K	Straight with key and tap for one location (Key slot is JIS B1301-1996 fastening type.

Shaft End Details		Servo Motor Model SGM7G-									
		05	09	13	20	30	44	55	75	1A	1E
Code: 2 or S* (Straight without Key)											
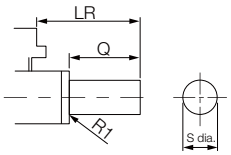	LR	40	58	58	58	79	79	113	113	116	116
	Q	30	40	40	40	76	76	110	110	110	110
	S	$16^{0}_{-0.011}$	$19^{0}_{-0.013}$	$22^{0}_{-0.013}$	$24^{0}_{-0.013}$	$35^{+0.01}_{0}$	$35^{+0.01}_{0}$	$42^{0}_{-0.016}$	$42^{0}_{-0.016}$	$42^{0}_{-0.016}$	$55^{+0.030}_{+0.011}$
Code: 6 or K* (Straight with Key and Tap)											
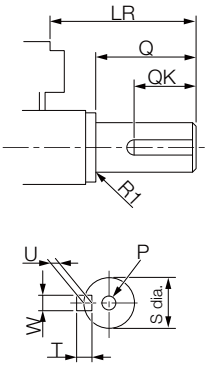	LR	40	58	58	58	79	79	113	113	116	116
	Q	30	40	40	40	76	76	110	110	110	110
	QK	20	25	25	25	60	60	90	90	90	90
	S	$16^{0}_{-0.011}$	$19^{0}_{-0.013}$	$22^{0}_{-0.013}$	$24^{0}_{-0.013}$	$35^{+0.01}_{0}$	$35^{+0.01}_{0}$	$42^{0}_{-0.016}$	$42^{0}_{-0.016}$	$42^{0}_{-0.016}$	$55^{+0.030}_{+0.011}$
	W	5	5	6	8	10	10	12	12	12	16
	T	5	5	6	7	8	8	8	8	8	10
	U	3	3	3.5	4	5	5	5	5	5	6
	P	M5 screw, Depth: 12				M12 screw, Depth: 25		M16 screw, Depth: 32			M20 screw, Depth: 40

* The code for the shaft end depends on the model:
SGM7G-05, -20, -30, -44, -55, -75, -1A, or -1E: 2 or 6
SGM7G-09 or -13: S or K

Gear Motors

◆ Gear Motor Models: 450 W to 2.9 kW (S7G05, S7G09, S7G13, S7G20, S7G30)

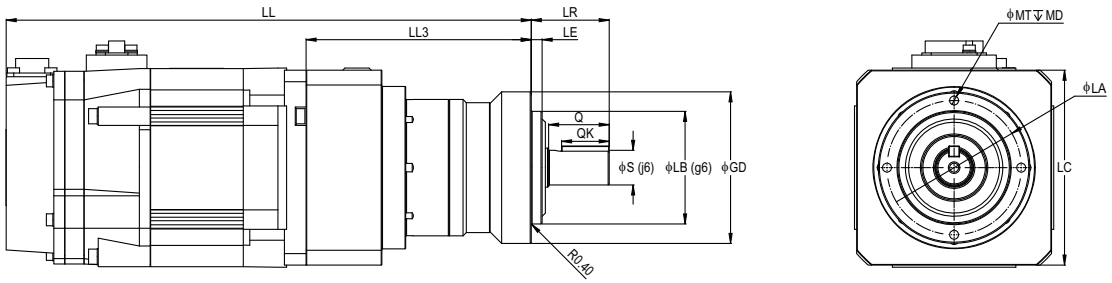

Shaft Detail

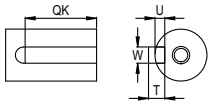

Model S7G		LL	LL3	LR	LE	ϕS	ϕLB	ϕGD	LC	ϕLA	ϕMT	MD	Q	QK	KD	W	U	T
450 W Models																		
200 V	05A□ -VL070-03	243 (276)	104	36	5	16	52	70	90	62	M5	10	28	22	0	5	3	5
	05A□ -VL070-05																	
	05A□ -VL090-10	256 (289)	117	46	7	22	68	90		80	M6	12	36	28		6	3.5	6
	05A□ -VL090-25	278 (311)	139															
	05A□ -VL120-50	293.5 (326.5)	154.5	70	9	32	90	120		108	M8	16	58	45		10	5	8
850 W Models																		
200 V	09A□ -VL090-03	259 (295)	122	46	7	22	68	90	130	80	M6	12	36	28	0	6	3.5	6
	09A□ -VL090-05																	
	09A□ -VL090-10																	
	09A□ -VL120-25	296.5 (332.5)	159.5	70	9	32	90	120		108	M8	16	58	45		10	5	8
	09A□ -VL155-50	321.5 (357.5)	184.5	97	12	40	120	155		140	M10	20	82	65		12		
1.3 kW Models																		
200 V	13A□ -VL090-03	287 (323)	134	46	7	22	68	90	130	80	M6	12	36	28	0	6	3.5	6
	13A□ -VL090-05																	
	13A□ -VL120-10	297 (333)	144	70	9	32	90	120		108	M8	16	58	45		10	5	8
	13A□ -VL120-25	324.5 (360.5)	171.5															
	13A□ -VL155-50	349.5 (385.5)	196.5	97	12	40	120	155		140	M10	20	82	65		12		
1.8 kW Models																		
200 V	20A□ -VL090-03	305 (341)	134	46	7	22	68	90	130	80	M6	12	36	28	0	6	3.5	6
	20A□ -VL090-05																	
	20A□ -VL120-10	315 (351)	144	70	9	30	90	120		108	M8	16	58	45		10	5	8
	20A□ -VL155-25	367.5 (403.5)	196.5	97	12	40	120	155		140	M10	20	82	65		12		
	20A□ -VL205-50	397 (433)	226	100	15	55	160	205		184	M12	22				16	6	10
2.9 kW Models																		
200 V	30A□ -VL120-03	285 (363)	155	70	9	32	90	120	180	108	M8	16	58	45	0	10	5	8
	30A□ -VL120-05																	
	30A□ -VL155-10	297 (375)	167	97	12	40	120	155		140	M10	20	82	65		12		
	30A□ -VL155-25	331.5 (409.5)	201.5															
	30A□ -VL205-50	361 (439)	231	100	15	55	160	205		184	M12	22				16	6	10

Note: The values in parentheses are for Servo Motors with Holding Brakes. 7.0kW motors not available with brake.

◆ Gear Motor Models: 4.4 kW to 7.5 kW (S7G44, S7G55, S7G75)

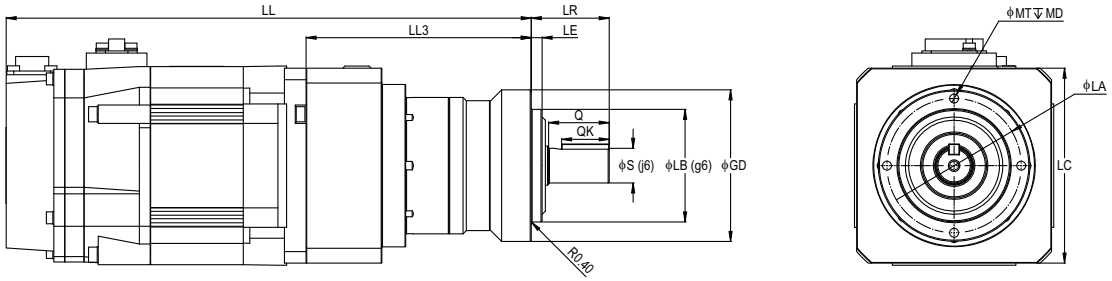

Shaft Detail

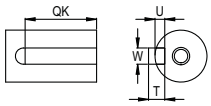

	Model S7G	LL	LL3	LR	LE	ϕS	ϕLB	ϕGD	LC	ϕLA	ϕMT	MD	Q	QK	KD	W	U	T
4.4 kW Models																		
200 V	44A□ -VL120-03	339 (387)	155	70	9	32	90	120	180	108	M8	16	58	45	0	10	5	8
	44A□ -VL120-05																	
	44A□ -VL205-10	370.5 (418.5)	186.5	100	15	55	160	205		184	M12	22	82	65		16	6	10
	44A□ -VL205-25	415 (463)	231															
	44A□ -VL235-50	424.5 (472.5)	240.5	126	18	75	180	235		210	M16	28	105	85		20	7.5	12
5.5 kW Models																		
200 V	55A□ -VL155-03	429 (473)	208	97	12	40	120	155	180	140	M10	20	82	65	0	12	5	8
	55A□ -VL155-05																	
	55A□ -VL205-10	443.5 (487.5)	222.5	100	15	55	160	205		184	M12	22				16	6	10
	55A□ -VL205-25	488 (532)	267															
	55A□ -VL235-50	498 (542)	277	126	18	75	180	235		210	M16	28	105	85		20	7.5	12
7.5 kW Models																		
200 V	75A□ -VL155-03	475 (519)	208	97	12	40	120	155	180	140	M10	20	82	65	0	12	5	8
	75A□ -VL155-05																	
	75A□ -VL205-10	489.5 (533.5)	222.5	100	15	55	160	205		184	M12	22				16	6	10
	75A□ -VL235-25	544 (588)	277	126	18	75	180	235		210	M16	28	105	85		20	7.5	12
	75A□ -VL235-50																	

Note: The values in parentheses are for Servo Motors with Holding Brakes. 7.0kW motors not available with brake.

Selecting Cables

◆ Cable Configurations

The cables shown below are required to connect a Servo Motor to a SERVOPACK.

Encoder Cable of 20 m or Less

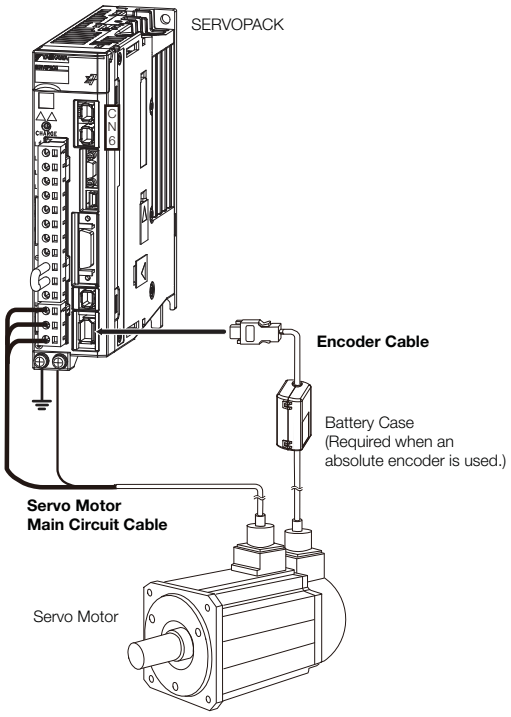

Encoder Cable of 30 m to 50 m (Relay Cable)

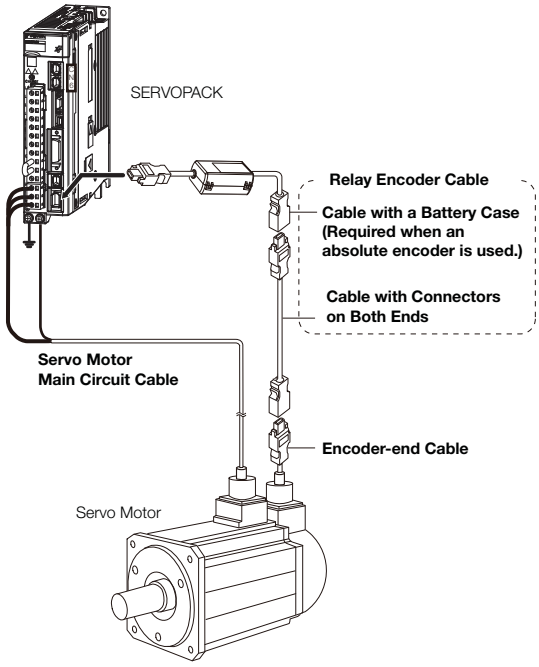

Note: 1. Cables with connectors on both ends that are compliant with an IP67 protective structure and European Safety Standards are not available from Yaskawa for the SGM7G Servo Motors. You must make such a cable yourself. Use the Connectors specified by Yaskawa for these Servo Motors. (These Connectors are compliant with the standards.) Yaskawa does not specify what wiring materials to use.

2. If the cable length exceeds 20 m, be sure to use a Relay Encoder Cable.

3. If you use a Servo Motor Main Circuit Cable that exceeds 20 m, the intermittent duty zone in the torque-motor speed characteristics will become smaller because the voltage drop increases.

4. Refer to the following manual for the following information.
   - Cable dimensional drawings and cable connection specifications
   - Order numbers and specifications of individual connectors for cables
   - Order numbers and specifications for wiring materials

   📖 *Σ-7-Series AC Servo Drive Peripheral Device Selection Manual* (Manual No.: SIEP S800001 32)

Servo Motor Main Circuit Cables (200 V)

Servo Motor Model	Name	Length (L)	Order Number			Appearance
			Standard Cable	Flexible Cable*	Flexible/Shielded	
SGM7G-03 and -05 300 W, 450 W	Power Cable for Servo Motors without Holding Brakes	3 m	N/A	JZSP-CVM21-03-E	YEA-CVM21-03(A)-E	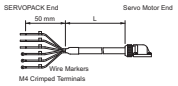
		5 m	N/A	JZSP-CVM21-05-E	YEA-CVM21-05(A)-E	
		10 m	N/A	JZSP-CVM21-10-E	YEA-CVM21-10(A)-E	
		15 m	N/A	JZSP-CVM21-15-E	YEA-CVM21-15(A)-E	
		20 m	N/A	JZSP-CVM21-20-E	YEA-CVM21-20(A)-E	
	Power Cable for Servo Motors with Holding Brakes	3 m	N/A	JZSP-CVM41-03-E	YEA-CVM41-03(A)-E	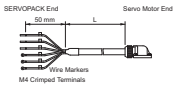
		5 m	N/A	JZSP-CVM41-05-E	YEA-CVM41-03(A)-E	
		10 m	N/A	JZSP-CVM41-10-E	YEA-CVM41-03(A)-E	
		15 m	N/A	JZSP-CVM41-15-E	YEA-CVM41-03(A)-E	
		20 m	N/A	JZSP-CVM41-20-E	YEA-CVM41-03(A)-E	

* Flexible cables are provided as a standard feature

Servo Motor Model	Name	Length (L)	Order Number			Appearance
			Standard Cable	Flexible Cable	Flexible/Shielded*2	
200V SGM7G-850 W, 1.3 kW	Power Cable*1	3 m	B1EV-03(A)-E	N/A	B1EP-03(A)-E	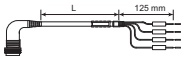
		5 m	B1EV-05(A)-E	N/A	B1EP-05(A)-E	
		10 m	B1EV-10(A)-E	N/A	B1EP-10(A)-E	
		15 m	B1EV-15(A)-E	N/A	B1EP-15(A)-E	
		20 m	B1EV-20(A)-E	N/A	B1EP-20(A)-E	
200V SGM7G-2.0 kW		3 m	B2EV-03(A)-E	N/A	B2EP-03(A)-E	
		5 m	B2EV-05(A)-E	N/A	B2EP-05(A)-E	
		10 m	B2EV-10(A)-E	N/A	B2EP-10(A)-E	
		15 m	B2EV-15(A)-E	N/A	B2EP-15(A)-E	
		20 m	B2EV-20(A)-E	N/A	B2EP-20(A)-E	
200V SGM7G-3.0 kW, to 4.4 kW		3 m	B4EV-03(A)-E	N/A	B4EP-03(A)-E	
		5 m	B4EV-05(A)-E	N/A	B4EP-05(A)-E	
		10 m	B4EV-10(A)-E	N/A	B4EP-10(A)-E	
		15 m	B4EV-15(A)-E	N/A	B4EP-15(A)-E	
		20 m	B4EV-20(A)-E	N/A	B4EP-20(A)-E	
200V SGM7G-5.5 kW, to 7.5 kW		3 m	B6EV-03(A)-E	N/A	B6EP-03(A)-E	
		5 m	B6EV-05(A)-E	N/A	B6EP-05(A)-E	
		10 m	B6EV-10(A)-E	N/A	B6EP-10(A)-E	
		15 m	B6EV-15(A)-E	N/A	B6EP-15(A)-E	
		20 m	B6EV-20(A)-E	N/A	B6EP-20(A)-E	
200V SGM7G-11kW, to 15 kW		3 m	B7EV-03(A)-E	N/A	B7EP-03(A)-E	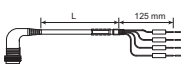
		5 m	B7EV-05(A)-E	N/A	B7EP-05(A)-E	
		10 m	B7EV-10(A)-E	N/A	B7EP-10(A)-E	
		15 m	B7EV-15(A)-E	N/A	B7EP-15(A)-E	
		20 m	B7EV-20(A)-E	N/A	B7EP-20(A)-E	

Servo Motor Model	Name	Length (L)	Order Number			Appearance
			Standard Cable	Flexible Cable	Flexible/Shielded*2	
200V SGM7G- 850 W to 15 kW	Holding Brake Cable	3 m	BBEV-03(A)-E	N/A	N/A	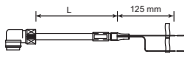
		5 m	BBEV-05(A)-E	N/A	N/A	
		10 m	BBEV-10(A)-E	N/A	N/A	
		15 m	BBEV-15(A)-E	N/A	N/A	
		20 m	BBEV-20(A)-E	N/A	N/A	
		3 m	N/A	N/A	BBEP-03(A)-E	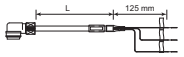
		5 m	N/A	N/A	BBEP-05(A)-E	
		10 m	N/A	N/A	BBEP-10(A)-E	
		15 m	N/A	N/A	BBEP-15(A)-E	
		20 m	N/A	N/A	BBEP-20(A)-E	

*1. Servo Motors with holding brakes require a holding brake cable in addition to a power cable.

*2. The order number for the Main Power Supply Cable is JZSP-UVA101-xx-E (standard cable) or JZSP-UVA121-xx-E (flexible cable). The order number for the Holding Brake Connector Kit is JZSP-CVB9-SMC3-E.

Servo Motor Main Circuit Cables (400 V Models)

Servo Motor Model	Name	Length (L)	Order Number			Appearance
			Standard	Flexible	Flexible/Shielded	
SGM7G-05 to -20 0.45 to 1.8kW (400V) SGM7G-05 to -09 0.45 to 0.85kW (400V High Speed)	Power Cable without Brake. Cable installed toward load	3 m	N/A	N/A	JZSP-C7M144-03-E-G6	
		5 m	N/A	N/A	JZSP-C7M144-05-E-G6	
		10 m	N/A	N/A	JZSP-C7M144-10-E-G6	
		15 m	N/A	N/A	JZSP-C7M144-15-E-G6	
		20 m	N/A	N/A	JZSP-C7M144-20-E-G6	
SGM7G-30 3.0kW (400V) SGM7G-13 to -20 1.3 to 1.8kW (400V High Speed)		3 m	N/A	N/A	JZSP-C7M154-03-E-G6	
		5 m	N/A	N/A	JZSP-C7M154-05-E-G6	
		10 m	N/A	N/A	JZSP-C7M154-10-E-G6	
		15 m	N/A	N/A	JZSP-C7M154-15-E-G6	
		20 m	N/A	N/A	JZSP-C7M154-20-E-G6	
SGM7G-44 4.4kW (400V) SGM7G-30 2.9kW (400V High Speed)		3 m	N/A	N/A	JZSP-C7M164-03-E-G6	
		5 m	N/A	N/A	JZSP-C7M164-05-E-G6	
		10 m	N/A	N/A	JZSP-C7M164-10-E-G6	
		15 m	N/A	N/A	JZSP-C7M164-15-E-G6	
		20 m	N/A	N/A	JZSP-C7M164-20-E-G6	
SGM7G-55 to -75 5.5 to 7.5kW (400V) SGM7G-44 4.4kW (400V High Speed)		3 m	N/A	N/A	JZSP-C7M175-03-E-G6	
		5 m	N/A	N/A	JZSP-C7M175-05-E-G6	
		10 m	N/A	N/A	JZSP-C7M175-10-E-G6	
		15 m	N/A	N/A	JZSP-C7M175-15-E-G6	
		20 m	N/A	N/A	JZSP-C7M175-20-E-G6	
SGM7G-1A to -1E 11 to15kW (400V)		3 m	N/A	N/A	JZSP-C7M185-03-E-G6	
		5 m	N/A	N/A	JZSP-C7M185-05-E-G6	
		10 m	N/A	N/A	JZSP-C7M185-10-E-G6	
		15 m	N/A	N/A	JZSP-C7M185-15-E-G6	
		20 m	N/A	N/A	JZSP-C7M185-20-E-G6	

Servo Motor Model	Name	Length (L)	Order Number			Appearance
			Standard	Flexible	Flexible/Shielded	
SGM7G-05 to -20 0.45 to 1.8kW (400V) SGM7G-05 to -09 0.45 to 0.85kW (400V High Speed)	Power Cable with Brake. Cable installed toward load	3 m	N/A	N/A	JZSP-C7M344-03-E-G6	
		5 m	N/A	N/A	JZSP-C7M344-05-E-G6	
		10 m	N/A	N/A	JZSP-C7M344-10-E-G6	
		15 m	N/A	N/A	JZSP-C7M344-15-E-G6	
		20 m	N/A	N/A	JZSP-C7M344-20-E-G6	
SGM7G-30 3.0kW (400V) SGM7G-13 to -20 1.3 to 1.8kW (400V High Speed)		3 m	N/A	N/A	JZSP-C7M354-03-E-G6	
		5 m	N/A	N/A	JZSP-C7M354-05-E-G6	
		10 m	N/A	N/A	JZSP-C7M354-10-E-G6	
		15 m	N/A	N/A	JZSP-C7M354-15-E-G6	
		20 m	N/A	N/A	JZSP-C7M354-20-E-G6	
SGM7G-44 4.4kW (400V) SGM7G-30 2.9kW (400V High Speed)		3 m	N/A	N/A	JZSP-C7M364-03-E-G6	
		5 m	N/A	N/A	JZSP-C7M364-05-E-G6	
		10 m	N/A	N/A	JZSP-C7M364-10-E-G6	
		15 m	N/A	N/A	JZSP-C7M364-15-E-G6	
		20 m	N/A	N/A	JZSP-C7M364-20-E-G6	
SGM7G-55 to -75 5.5 to 7.5kW (400V) SGM7G-44 4.4kW (400V High Speed)		3 m	N/A	N/A	JZSP-C7M375-03-E-G6	
		5 m	N/A	N/A	JZSP-C7M375-05-E-G6	
		10 m	N/A	N/A	JZSP-C7M375-10-E-G6	
		15 m	N/A	N/A	JZSP-C7M375-15-E-G6	
		20 m	N/A	N/A	JZSP-C7M375-20-E-G6	
SGM7G-1A to -1E 11 to15kW (400V)		3 m	N/A	N/A	JZSP-C7M385-03-E-G6	
		5 m	N/A	N/A	JZSP-C7M385-05-E-G6	
		10 m	N/A	N/A	JZSP-C7M385-10-E-G6	
		15 m	N/A	N/A	JZSP-C7M385-15-E-G6	
		20 m	N/A	N/A	JZSP-C7M385-20-E-G6	

Servo Motor Connection Shielding Clamp (400 V Models)

Servo Motor Model	Name	Order Number	Appearance
SGM7G-05 to -30 200W to 2.9kW (400V)	Shielding Clamp for Power Cable	KLBUE 4-13.5_SC	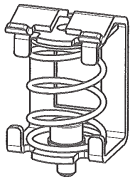
SGM7G-44 to -75 4.4 to 7.5kW (400V)		KLBUE 10-20_SC	
SGM7G-1A to -1E 11 to15kW (400V)		KLBUE 15-32_SC	

Encoder Cables of 20 m or Less (200 V)

Servo Motor Model	Name	Length (L)	Order Number		Appearance
			Standard Cable	Flexible Cable*	
All 200 V SGM7G models	Cables with Connectors on Both Ends (for incremental encoder)	3 m	JZSP-CVP01-03-E	JZSP-CVP11-03-E	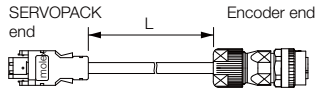
		5 m	JZSP-CVP01-05-E	JZSP-CVP11-05-E	
		10 m	JZSP-CVP01-10-E	JZSP-CVP11-10-E	
		15 m	JZSP-CVP01-15-E	JZSP-CVP11-15-E	
		20 m	JZSP-CVP01-20-E	JZSP-CVP11-20-E	
		3 m	JZSP-CVP02-03-E	JZSP-CVP12-03-E	
		5 m	JZSP-CVP02-05-E	JZSP-CVP12-05-E	
		10 m	JZSP-CVP02-10-E	JZSP-CVP12-10-E	
		15 m	JZSP-CVP02-15-E	JZSP-CVP12-15-E	
		20 m	JZSP-CVP02-20-E	JZSP-CVP12-20-E	
	Cables with Connectors on Both Ends (for absolute encoder: With Battery Case)	3 m	JZSP-CVP06-03-E	JZSP-CVP26-03-E	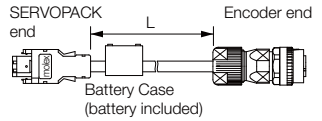
		5 m	JZSP-CVP06-05-E	JZSP-CVP26-05-E	
		10 m	JZSP-CVP06-10-E	JZSP-CVP26-10-E	
		15 m	JZSP-CVP06-15-E	JZSP-CVP26-15-E	
		20 m	JZSP-CVP06-20-E	JZSP-CVP26-20-E	
		3 m	JZSP-CVP07-03-E	JZSP-CVP27-03-E	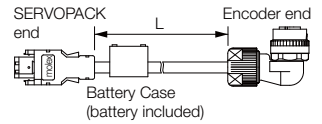
		5 m	JZSP-CVP07-05-E	JZSP-CVP27-05-E	
		10 m	JZSP-CVP07-10-E	JZSP-CVP27-10-E	
		15 m	JZSP-CVP07-15-E	JZSP-CVP27-15-E	
		20 m	JZSP-CVP07-20-E	JZSP-CVP27-20-E	

* Use Flexible Cables for moving parts of machines, such as robots. NOTE: Shaded items are non-stock items.

Encoder Cables of 20 m or Less (400V Models)

Servo Motor Model	Name	Length (L)	Order Number		Appearance
			For Absolute encoder	For Incremental encoder	
SGM7G-05 to -15 (450 W to 1.5 kW)	Flexible cable with straight connector (M12)	3 m	JZSP-C7PA2M-03-E	JZSP-C7PI2M-03-E-G6	
		5 m	JZSP-C7PA2M-05-E	JZSP-C7PI2M-03-E-G6	
		10 m	JZSP-C7PA2M-10-E	JZSP-C7PI2M-03-E-G6	
		15 m	JZSP-C7PA2M-15-E	JZSP-C7PI2M-03-E-G6	
		20 m	JZSP-C7PA2M-20-E	JZSP-C7PI2M-03-E-G6	
SGM7G-05 to -15 (450 W to 1.5 kW)	Flexible cable with right angle connector (M12)	3 m	JZSP-C7PA2N-03-E-G6	JZSP-C7PI2N-03-E-G6	
		5 m	JZSP-C7PA2N-05-E-G6	JZSP-C7PI2N-05-E-G6	
		10 m	JZSP-C7PA2N-10-E-G6	JZSP-C7PI2N-10-E-G6	
		15 m	JZSP-C7PA2N-15-E-G6	JZSP-C7PI2N-15-E-G6	
		20 m	JZSP-C7PA2N-20-E-G6	JZSP-C7PI2N-20-E-G6	

Relay Encoder Cables of 30 m to 50 m (200 V)

Servo Motor Model	Name	Length (L)	Order Number for Standard Cable	Appearance
All SGM7G models	Encoder-end Cable (for incremental or absolute encoder)	0.3 m	JZSP-CVP01-E	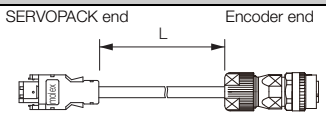
			JZSP-CVP02-E	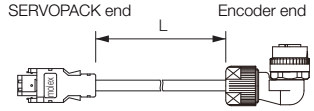
	Cables with Connectors on Both Ends (for incremental or absolute encoder)	30 m	JZSP-UCMP00-30-E	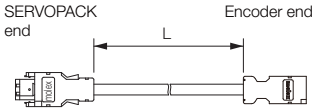
		40 m	JZSP-UCMP00-40-E	
		50 m	JZSP-UCMP00-50-E	
	Cable with a Battery Case (Required when an absolute encoder is used.)*	0.3 m	JZSP-CSP12-E	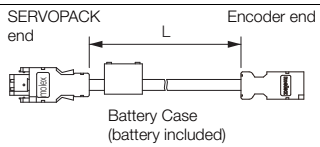

* This Cable is not required if a battery is connected to the host controller.

Connector Specifications (200 V)

◆ SGM7G-03A and -05A without Holding Brakes

• Encoder Connector Specifications (24-bit Encoder)

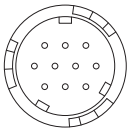

Receptacle: CM10-R10P-D
Applicable plug: Not provided by Yaskawa.
Plug: CM10-AP10S-☐-D for Right-angle Plug
CM10-SP10S-☐-D for Straight Plug
(☐ depends on the applicable cable size.)
Manufacturer: DDK Ltd.

• Servo Motor Connector Specifications

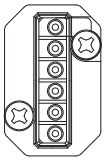

Manufacturer: Japan Aviation Electronics Industry, Ltd.

◆ SGM7G-09A to -1EA without Holding Brakes

• Encoder Connector Specifications (24-bit Encoder)

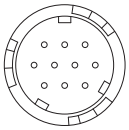

Receptacle: CM10-R10P-D
Applicable plug: Not provided by Yaskawa.
Plug: CM10-AP10S-☐-D for Right-angle Plug
CM10-SP10S-☐-D for Straight Plug
(☐ depends on the applicable cable size.)
Manufacturer: DDK Ltd.

• Servo Motor Connector Specifications

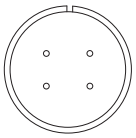

Manufacturer: DDK Ltd.

◆ SGM7G-03A and -05A with Holding Brakes

• Encoder Connector Specifications (24-bit Encoder)

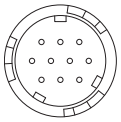

Receptacle: CM10-R10P-D
Applicable plug: Not provided by Yaskawa.
Plug: CM10-AP10S-☐-D for Right-angle Plug
CM10-SP10S-☐-D for Straight Plug
(☐ depends on the applicable cable size.)
Manufacturer: DDK Ltd.

• Servo Motor Connector Specifications

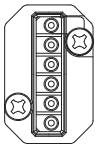

Manufacturer: Japan Aviation Electronics Industry, Ltd.

◆ SGM7G-09A to -1EA with Holding Brakes

• Encoder Connector Specifications (24-bit Encoder)

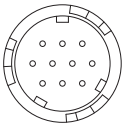

Receptacle: CM10-R10P-D
Applicable plug: Not provided by Yaskawa.
Plug: CM10-AP10S-☐-D for Right-angle Plug
CM10-SP10S-☐-D for Straight Plug
(☐ depends on the applicable cable size.)
Manufacturer: DDK Ltd.

• Servo Motor Connector Specifications

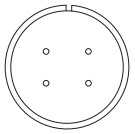

Manufacturer: DDK Ltd.

• Brake Connector Specifications

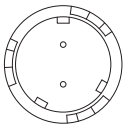

Receptacle: CM10-R2P-D
Applicable plug: Not provided by Yaskawa.
Plug: CM10-AP2S-☐-D for Right-angle Plug
CM10-SP2S-☐-D for Straight Plug
(☐ depends on the applicable cable size.)
Manufacturer: DDK Ltd.

Connector Specifications (400V)

◆ SGM7G-05D□ F to -44D□ F and SGM7G-05D□ R to -30D□ R

Encoder Connector Specifications

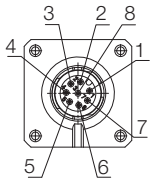

Receptacle
Size: M12
Part number: 1419959
Model: SACC-MSQ-M12MS-25-3,2 SCO
Manufacturer: Phoenix Contact

1	PG 5V
2	PG 0V
3	FG
4	BAT (+)
5	BAT (-)
6	Data (+)
7	Data (-)
8	Empty
Housing	Shield

Servo Motor Connector Specifications

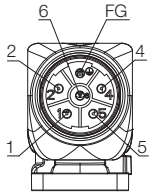

Receptacle
Size: M23
Part number: 1617905
Model: ST-5EP1N8AAD00S
Manufacturer: Phoenix Contact

1	V
2	(Brake)
4	(Brake)
5	U
6	W
FG	FG
Housing	Shield

◆ SGM7G-55D□ F to -1ED□ F and SGM7G-44D□ R

Encoder Connector Specifications

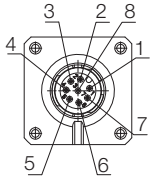

Receptacle
Size: M12
Part number: 1419959
Model: SACC-MSQ-M12MS-25-3,2 SCO
Manufacturer: Phoenix Contact

1	PG 5V
2	PG 0V
3	FG
4	BAT (+)
5	BAT (-)
6	Data (+)
7	Data (-)
8	Empty
Housing	Shield

Servo Motor Connector Specifications

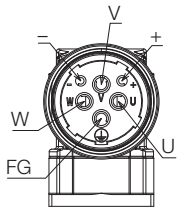

Receptacle
Size: M40
Part number: 1607927
Model: SM-5EPWN8AAD00S
Manufacturer: Phoenix Contact

U	U
V	V
W	W
+	(Brake)
7	(Brake)
FG	FG
Housing	Shield

Servo Motor Connector Rotational Angle (400 V)

SGM7G-05D□□ to -20D□□

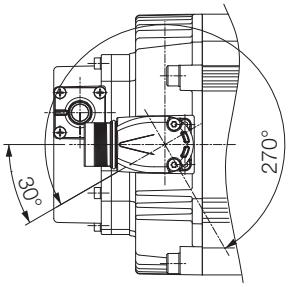

SGM7G-30D□□ to -44D□F

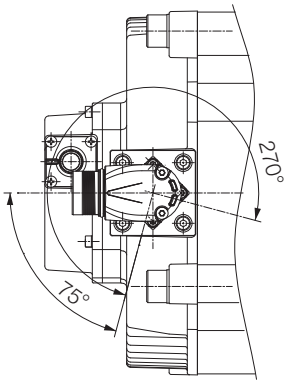

SGM7G-44D□R, -55D□F, -75D□F, -1AD□F, -1ED□F

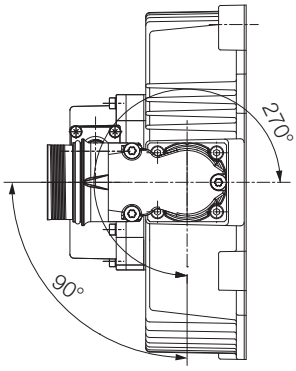

Allowable number of rotations: 10

Direct Drive Servo Motors

SGM7F (With Core, Inner Rotor) 170

SGM7D (With Core, Outer Rotor) 186

SGMCS (Small Capacity, Coreless or Medium Capacity, with Core) 214

SGM7F (With Core, Inner Rotor)

Model Designations

SGM7F - 02 A 7 A 1 1

1st+2nd digits	3rd digit	4th digit	5th digit	6th digit	7th digit

Direct Drive Servomotors: SGM7F

1st+2nd digits Rated Output

Rated Torque

Code	Specification
02	2.00 N·m
04	4.00 N·m
05	5.00 N·m
07	7.00 N·m
08	8.00 N·m
10	10.0 N·m
14	14.0 N·m
16	16.0 N·m
17	17.0 N·m
25	25.0 N·m
35	35.0 N·m

3rd digit Servomotor Outer Diameter

Code	Specification
A	100-mm dia.
B	135-mm dia.
C	175-mm dia.
D	230-mm dia.
M	280-mm dia.
N	360-mm dia.

4th digit Serial Encoder

Code	Specification
7	24-bit multiturn absolute encoder*
F	24-bit incremental encoder*

* Both multiturn absolute encoder and incremental encoder can be used as a single-turn absolute encoder by setting parameters.

5th digit Design Revision Order

M: Standard

6th digit Flange

Code	Mounting	Servomotor Outer Diameter Code (3rd Digit)			
		A	B	C	D
1	Non-load side	✓	✓	✓	✓
	Load side	–	–	–	–
3	Non-load side	–	–	–	–
4	Non-load side (with cable on side)	✓	✓	✓	✓

✓ : Applicable models.

7th digit Options

Code	Specification
1	Without options
2	High machine precision (runout at end of shaft and runout of shaft surface: 0.01 mm)

Note: Shaded Rated Output, Serial Encoder and Options are non-stock

Note: 1. Direct Drive Servomotors are not available with holding brakes.
2. This information is provided to explain model numbers. It is not meant to imply that models are available for all combinations of codes.

◆ Manufactured Models

Rated Torque N·m	Servomotor Outer Diameter			
	A (100-mm dia.)	B (135-mm dia.)	C (175-mm dia.)	D (230-mm dia.)
2.00	SGM7F-02A	–	–	–
4.00	–	SGM7F-04B	–	–
5.00	SGM7F-05A	–	–	–
7.00	SGM7F-07A	–	–	–
8.00	–	–	SGM7F-08C	–
10.0	–	SGM7F-10B	–	–
14.0	–	SGM7F-14B	–	–
16.0	–	–	–	SGM7F-16D
17.0	–	–	SGM7F-17C	–
25.0	–	–	SGM7F-25C	–
35.0	–	–	–	SGM7F-35D
45.0	–	–	–	–
80.0	–	–	–	–
110	–	–	–	–
150	–	–	–	–
200	–	–	–	–

Note: The above table shows combinations of the rated torque and outer diameter. The fourth through seventh digits have been omitted.

Specifications and Ratings: Small Capacity

Specifications

Voltage			200 V									
Model SGM7F-			02A	05A	07A	04B	10B	14B	08C	17C	25C	16D	35D
Time Rating			Continuous										
Thermal Class			A										
Insulation Resistance			500 VDC, 10 MΩ min.										
Withstand Voltage			1,500 VAC for 1 minute										
Excitation			Permanent magnet										
Mounting			Flange-mounted										
Drive Method			Direct drive										
Rotation Direction			Counterclockwise (CCW) for forward reference when viewed from the load side										
Vibration Class*1			V15										
Absolute Accuracy			±15 s										
Repeatability			±1.3 s										
Protective Structure*2			Totally enclosed, self-cooled, IP42 (The protective structure is IP40 for CE Marking.)										
Environmental Conditions	Surrounding Air Temperature		0°C to 40°C (with no freezing)										
	Surrounding Air Humidity		20% to 80% relative humidity (with no condensation)										
	Installation Site		• Must be indoors and free of corrosive and explosive gases. • Must be well-ventilated and free of dust and moisture. • Must facilitate inspection and cleaning. • Must have an altitude of 1,000 m or less. • Must be free of strong magnetic fields.										
	Storage Environment		Store the Servomotor in the following environment if you store it with the power cable disconnected. Storage Temperature: -20°C to 60°C (with no freezing) Storage Humidity: 20% to 80% relative humidity (with no condensation)										
Mechanical Tolerances*3	Runout of Output Shaft Surface	mm	0.02 (0.01 for high machine precision option)										
	Runout at End of Output Shaft	mm	0.04 (0.01 for high machine precision option)										
	Parallelism between Mounting Surface and Output Shaft Surface	mm	0.07										
	Concentricity between Output Shaft and Flange Outer Diameter	mm	0.07										
Shock Resistance*4	Impact Acceleration Rate at Flange		490 m/s^2										
	Number of Impacts		2 times										
Vibration Resistance*4	Vibration Acceleration Rate at Flange		49 m/s^2										
Applicable SERVOPACKs	SGD7S-		2R8A, 2R1F		2R8A, 2R8F		5R5A	2R8A, 2R8F	5R5A	7R6A	5R5A	7R6A*5, 120A	
	SGD7W- SGD7C-		2R8A					2R8A				7R6A*5	

*1. A vibration class of V15 indicates a vibration amplitude of 15 μm maximum on the Servomotor without a load at the rated motor speed.
*2. The hollow hole section, motor mounting surface, output shaft surface, and gap around the rotating part of the shaft are excluded. Protective structure specifications apply only when the special cable is used.
*3. Refer to the following figure for the relevant locations on the Servomotor. Refer to the dimensional drawings of the individual Servomotors for more information on tolerances.

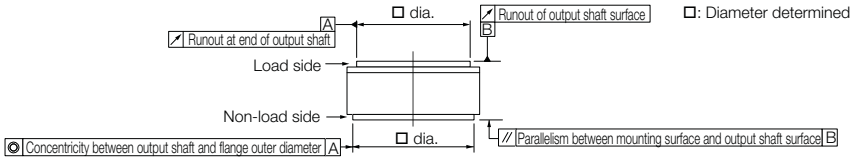

*4. The given values are for when the Servomotor shaft is mounted horizontally and shock or vibration is applied in the directions shown in the following figures.
The strength of the vibration that the Servomotor can withstand depends on the application. Check the vibration acceleration rate.

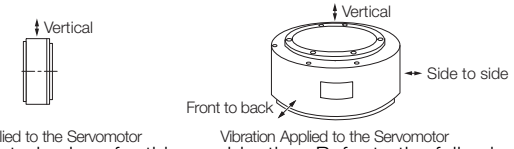

Shock Applied to the Servomotor Vibration Applied to the Servomotor

*5. Use derated values for this combination. Refer to the following section for information on derating values.
☞ **Ratings (page 172)**

Ratings

Voltage			200 V										
Model SGM7F-			02A	05A	07A	04B	10B	14B	08C	17C	25C	16D	35D
Rated Output*1		W	63	157	220	126	314	440	251	534	785	503	1100 1000 *5
Rated Torque*1, *2		N·m	2.00	5.00	7.00	4.00	10.0	14.0	8.00	17.0	25.0	16.0	35.0
Instantaneous Maximum Torque*1		N·m	6.00	15.0	21.0	12.0	30.0	42.0	24.0	51.0	75.0	48.0	105
Stall Torque*1		N·m	2.00	5.00	7.00	4.00	10.0	14.0	8.00	17.0	25.0	16.0	35.0
Rated Current*1		Arms	1.7	1.8	2.1	2.0	2.8	4.6	2.4	4.5		5.0	
Instantaneous Maximum Current*1		Arms	5.1	5.4	6.3	6.4	8.9	14.1	8.6	14.7	13.9	16.9	16.0
Rated Motor Speed*1		min^{-1}	300			300			300				300 270*5
Maximum Motor Speed*1		min^{-1}	600			600			600		500	600	400
Torque Constant		N·m/Arms	1.28	3.01	3.64	2.21	3.81	3.27	3.52	4.04	6.04	3.35	7.33
Motor Moment of Inertia		$\times 10^{-4}$ kg·m^2	8.04	14.5	19.3	16.2	25.2	36.9	56.5	78.5	111	178	276
Rated Power Rate*1		kW/s	4.98	17.2	25.4	9.88	39.7	53.1	11.3	36.8	56.3	14.4	44.4
Rated Angular Acceleration Rate*1		rad/s^2	2490	3450	3630	2470	3970	3790	1420	2170	2250	899	1270
Heat Sink Size		mm	300 × 300 × 12			350 × 350 × 12			450 × 450 × 12			550 × 550 × 12	
Allowable Load Moment of Inertia (Motor Moment of Inertia Ratio)			25 times	35 times	35 times	25 times	40 times	45 times	15 times	25 times	25 times	10 times	15 times
	With External Regenerative Resistor and External Dynamic Brake Resistor*3		25 times	35 times	35 times	25 times	40 times	45 times	15 times	25 times	25 times	10 times	15 times
Allowable Load*4	Allowable Thrust Load	N	1100	1100	1100	1500			3300			4000	
	Allowable Moment Load	N·m	22	24	26	45	55	65	92	98	110	210	225

*1. These values are for operation in combination with a SERVOPACK when the temperature of the armature winding is 100°C. The values for other items are at 20°C. These are typical values.

*2. The rated torques are the continuous allowable torque values at a surrounding air temperature of 40°C with a steel heat sink of the dimensions given in the table.

*3. To externally connect dynamic brake resistor, select hardware option specification 020 for the SERVOPACK. However, you cannot externally connect dynamic brake resistor if you use the following SERVOPACKs (maximum applicable motor capacity: 400 W).
- SGD7S-R70□ □ □ A020 to -2R8□ □ □ A020
- SGD7W-1R6A20A020 to -2R8A20A020
- SGD7C-1R6AMAA020 to -2R8AMAA020

*4. The thrust loads and moment loads that are applied while a Servomotor is operating are roughly classified into the following patterns. Design the machine so that the thrust loads or moment loads will not exceed the values given in the table.

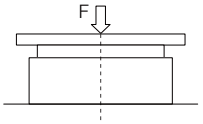

Where F is the external force,
Thrust load = F + Load mass
Moment load = 0

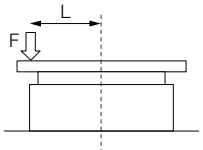

Where F is the external force,
Thrust load = F + Load mass
Moment load = F × L

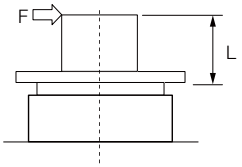

Where F is the external force,
Thrust load = Load mass
Moment load = F × L

*5. If you use an SGD7S-7R6A SERVOPACK and SGM7F-35D Servomotor together, use this value (a derated value).

Note: For the bearings used in these Servomotors, the loss depends on the bearing temperature. The amount of heat loss is higher at low temperatures.

Torque-Motor Speed Characteristics

A : Continuous duty zone ——— (solid lines): With three-phase 200-V or single-phase 230-V input
B : Intermittent duty zone - - - - - - - (dotted lines): With single-phase 200-V input
— – — (dashed-dotted lines): With single-phase 100-V input

SGM7F-02A

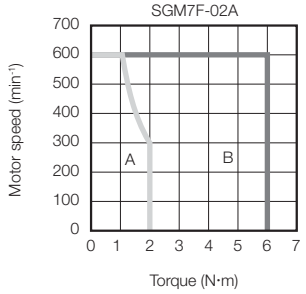

SGM7F-05A

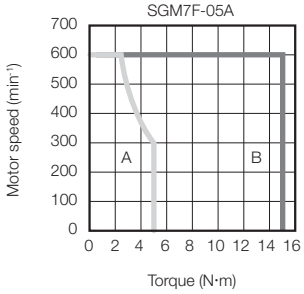

SGM7F-07A

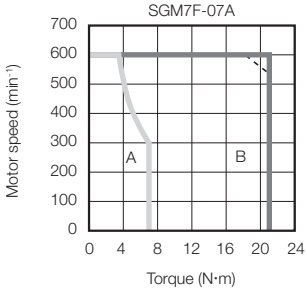

SGM7F-04B*1

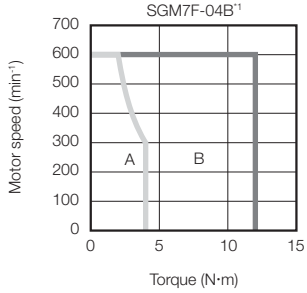

SGM7F-10B

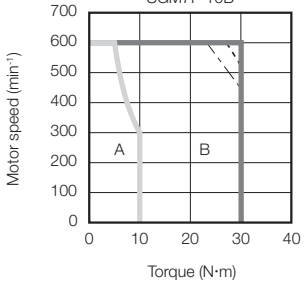

SGM7F-14B*1

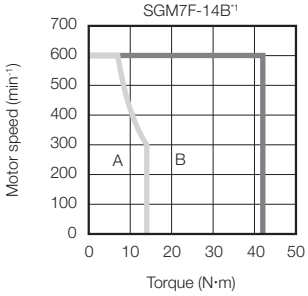

SGM7F-08C

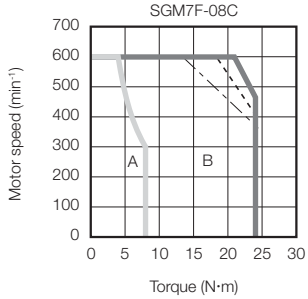

SGM7F-17C

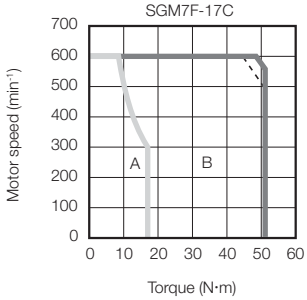

SGM7F-25C*2

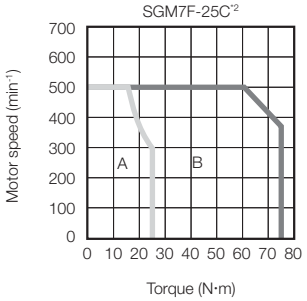

SGM7F-16D

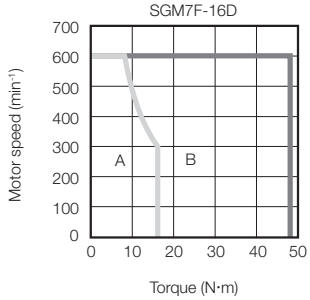

SGM7F-35D

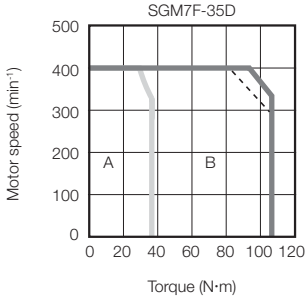

*1. The characteristics are the same for three-phase 200 V, single-phase 200 V, and single-phase 100 V.

*2. Contact your Yaskawa representative for information on the SGM7F-25C.

Note: 1. These values (typical values) are for operation in combination with a SERVOPACK when the temperature of the armature winding is 100°C.

2. The characteristics in the intermittent duty zone depend on the power supply voltage.

3. If you use a Servomotor Main Circuit Cable that exceeds 20 m, the intermittent duty zone in the torque-motor speed characteristics will become smaller because the voltage drop increases.

Servomotor Overload Protection Characteristics

The overload detection level is set for hot start conditions with a Servomotor surrounding air temperature of 40°C.

SGM7F-□□A, -□□B

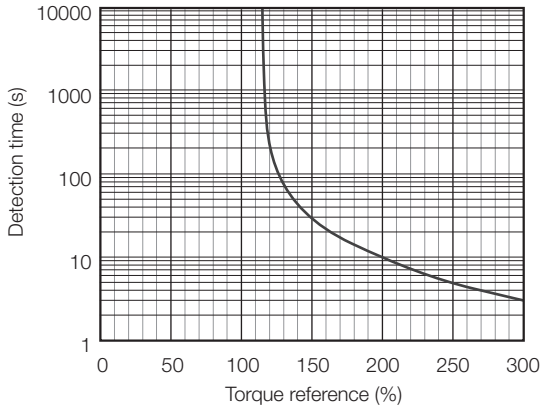

SGM7F-08C

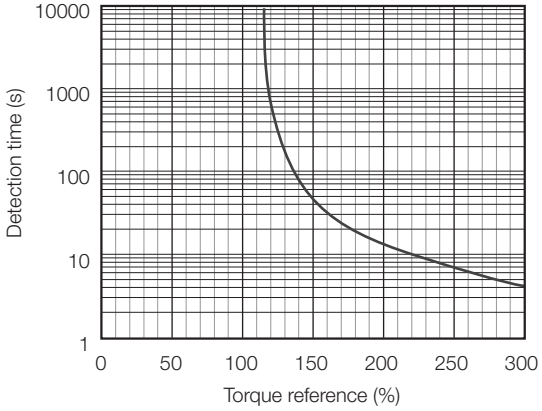

SGM7F-17C and -25C

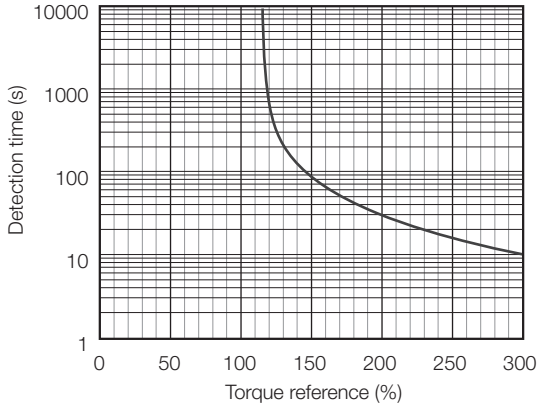

SGM7F-16D

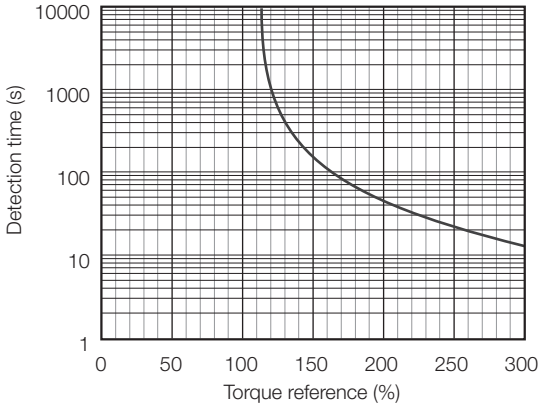

SGM7F-35D

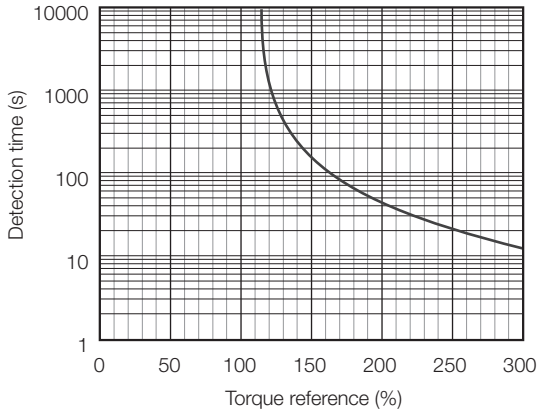

Note: The above overload protection characteristics do not mean that you can perform continuous duty operation with an output of 100% or higher. Use the Servomotor so that the effective torque remains within the continuous duty zone given in Torque-Motor Speed Characteristics on page 173.

Allowable Load Moment of Inertia

The allowable load moments of inertia (motor moment of inertia ratios) for the Servomotors are given in the Ratings (page 172). The values are determined by the regenerative energy processing capacity of the SERVOPACK and are also affected by the drive conditions of the Servomotor. Perform the required Steps for each of the following cases.

Use the SigmaSize+ AC Servo Drive Capacity Selection Program to check the driving conditions. Contact your Yaskawa representative for information on this program.

◆ Exceeding the Allowable Load Moment of Inertia

Use one of the following measures to adjust the load moment of inertia to within the allowable value.

- Reduce the torque limit.
- Reduce the deceleration rate.
- Reduce the maximum motor speed.

If the above steps is not possible, install an external regenerative resistor.

Information

An Overvoltage Alarm (A.400) is likely to occur during deceleration if the load moment of inertia exceeds the allowable load moment of inertia. SERVOPACKs with a built-in regenerative resistor may generate a Regenerative Overload Alarm (A.320). Refer to External Regenerative Resistors (200 V Models) (page 539) for the regenerative power (W) that can be processed by the SERVOPACKs.
Install an External Regenerative Resistor when the built-in regenerative resistor cannot process all of the regenerative power.

◆ SERVOPACKs without Built-in Regenerative Resistors

The following graph shows the allowable load moment of inertia scaling factor of the motor speed (reference values for deceleration operation at or above the rated torque). Application is possible without an external regenerative resistor within the allowable value. However, an External Regenerative Resistor is required in the shaded areas of the graphs.

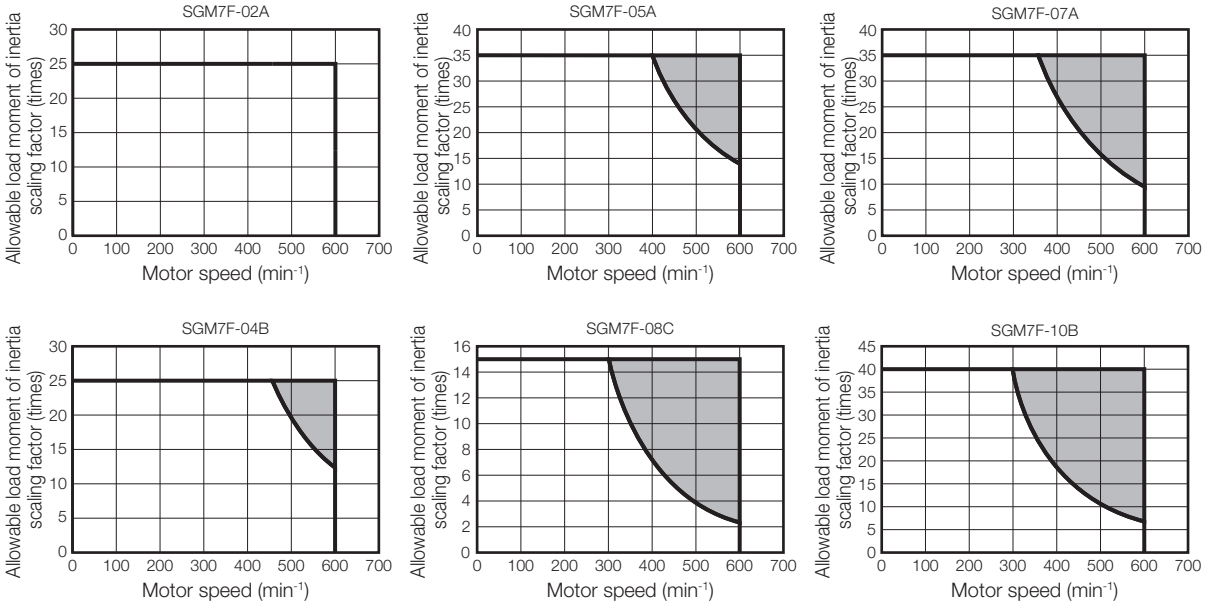

Note: Applicable SERVOPACK models: SGD7S-2R8A and -2R8F

◆ When an External Regenerative Resistor Is Required

Install the External Regenerative Resistor. Refer to the following section for the recommended products.

☞ **External Regenerative Resistors (200 V Models) (page 539)**

External Dimensions

◆ SGM7F-☐ ☐ A

• Flange Specification 1

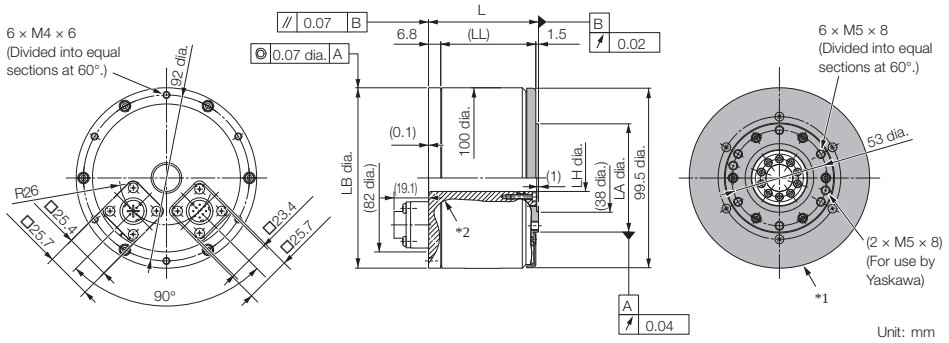

*1. The shaded section indicates the rotating parts.
*2. The hatched section indicates the non-rotating parts.
Note: Values in parentheses are reference dimensions.

Model SGM7F-	L	(LL)	LB	LH	LA	Approx. Mass [kg]
02A☐ A11	61	(52.7)	$100\ ^{0}_{-0.035}$	$15\ ^{+0.4}_{0}$	$60\ ^{0}_{-0.030}$	2.5
05A☐ A11	96	(87.7)	$100\ ^{0}_{-0.035}$	$15\ ^{+0.4}_{0}$	$60\ ^{0}_{-0.030}$	5.0
07A☐ A11	122	(113.7)	$100\ ^{0}_{-0.035}$	$15\ ^{+0.4}_{0}$	$60\ ^{0}_{-0.030}$	6.5

• Flange Specification 4

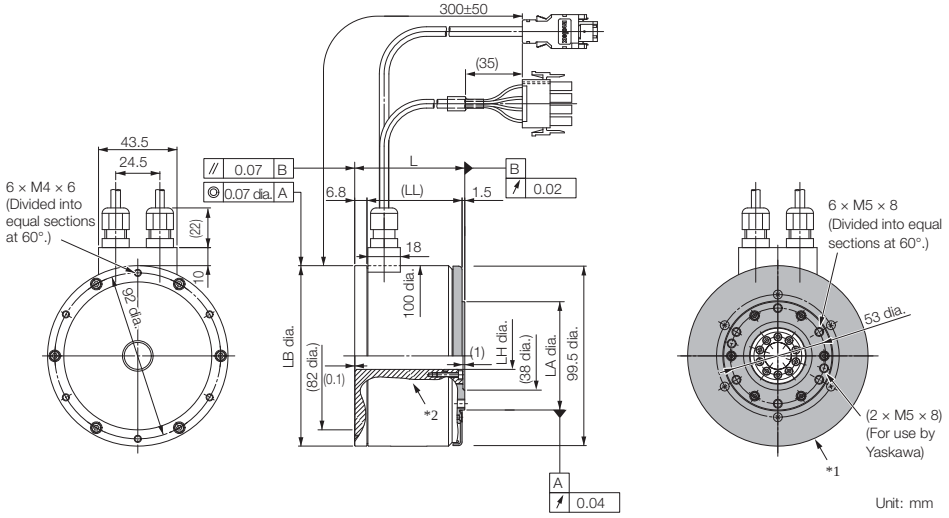

*1. The shaded section indicates the rotating parts.
*2. The hatched section indicates the non-rotating parts.
Note: Values in parentheses are reference dimensions.

Model SGM7F-	L	(LL)	LB	LH	LA	Approx. Mass [kg]
02A☐ A41	61	(52.7)	$100\ ^{0}_{-0.035}$	$15\ ^{+0.4}_{0}$	$60\ ^{0}_{-0.030}$	2.5
05A☐ A41	96	(87.7)	$100\ ^{0}_{-0.035}$	$15\ ^{+0.4}_{0}$	$60\ ^{0}_{-0.030}$	5.0
07A☐ A41	122	(113.7)	$100\ ^{0}_{-0.035}$	$15\ ^{+0.4}_{0}$	$60\ ^{0}_{-0.030}$	6.5

Refer to the following section for information on connectors.

☞ **Connector Specifications (page 180)**

◆ SGM7F-□ □ B

• Flange Specification 1

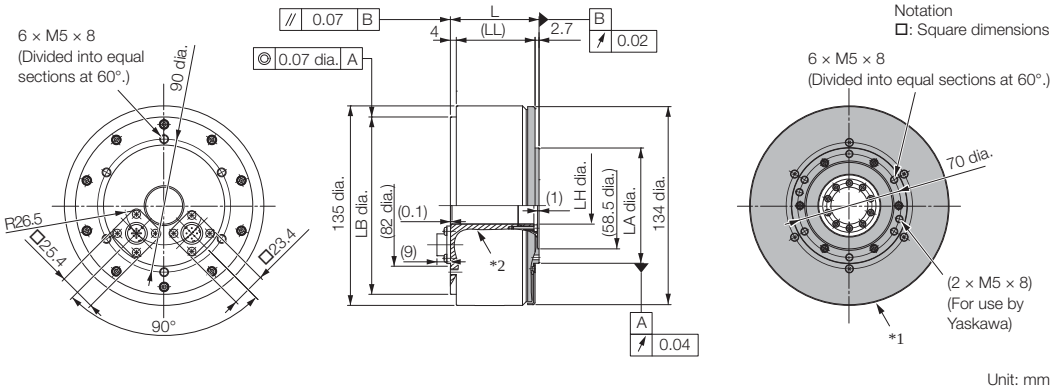

Unit: mm

*1. The shaded section indicates the rotating parts.
*2. The hatched section indicates the non-rotating parts.
Note: Values in parentheses are reference dimensions.

Model SGM7F-	L	(LL)	LB	LH	LA	Approx. Mass [kg]
04B□ A11	60	53.3	$120^{\ 0}_{-0.035}$	$25^{+0.3}_{+0.1}$	$78^{\ 0}_{-0.030}$	5.0
10B□ A11	85	78.3	$120^{\ 0}_{-0.035}$	$25^{+0.3}_{+0.1}$	$78^{\ 0}_{-0.030}$	6.5
14B□ A11	115	108.3	$120^{\ 0}_{-0.035}$	$25^{+0.3}_{+0.1}$	$78^{\ 0}_{-0.030}$	9.0

• Flange Specification 4

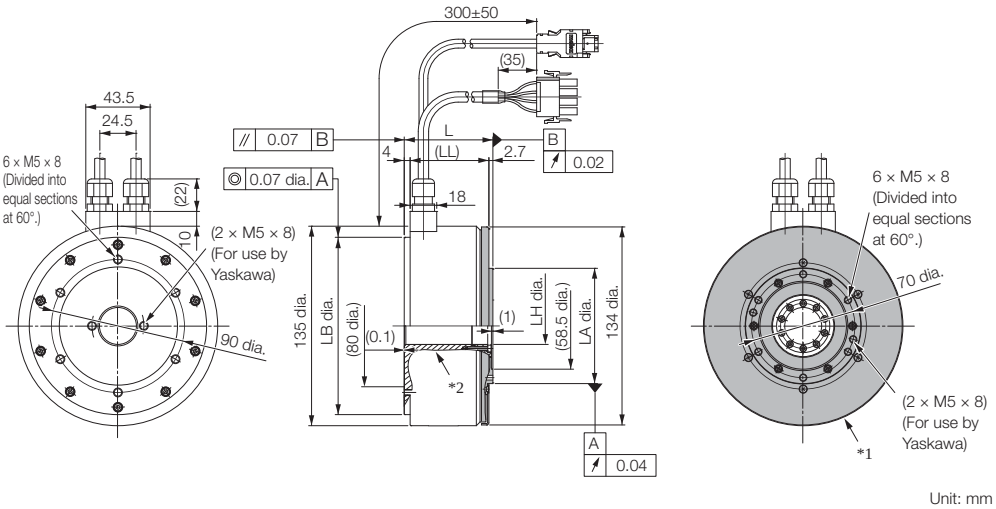

Unit: mm

*1. The shaded section indicates the rotating parts.
*2. The hatched section indicates the non-rotating parts.
Note: Values in parentheses are reference dimensions.

Model SGM7F-	L	(LL)	LB	LH	LA	Approx. Mass [kg]
04B□ A41	60	53.3	$120^{\ 0}_{-0.035}$	$25^{+0.3}_{+0.1}$	$78^{\ 0}_{-0.030}$	5.0
10B□ A41	85	78.3	$120^{\ 0}_{-0.035}$	$25^{+0.3}_{+0.1}$	$78^{\ 0}_{-0.030}$	6.5
14B□ A41	115	108.3	$120^{\ 0}_{-0.035}$	$25^{+0.3}_{+0.1}$	$78^{\ 0}_{-0.030}$	9.0

Refer to the following section for information on connectors.

☞ **Connector Specifications (page 180)**

◆ SGM7F-□ □ C

• Flange Specification 1

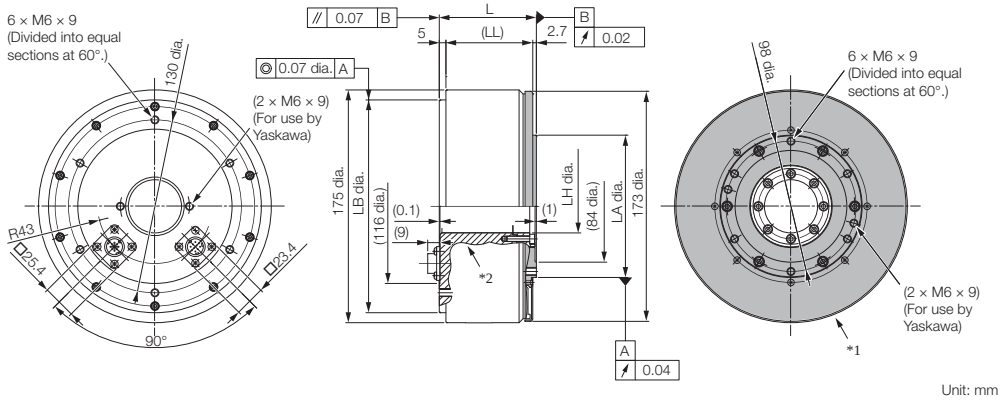

Unit: mm

*1. The shaded section indicates the rotating parts.
*2. The hatched section indicates the non-rotating parts.
Note: Values in parentheses are reference dimensions.

Model SGM7F-	L	(LL)	LB	LH	LA	Approx. Mass [kg]
08C□ A11	73	65.3	$160\ ^{0}_{-0.040}$	$40\ ^{+0.3}_{+0.1}$	$107\ ^{0}_{-0.035}$	9.0
17C□ A11	87	79.3	$160\ ^{0}_{-0.040}$	$40\ ^{+0.3}_{+0.1}$	$107\ ^{0}_{-0.035}$	11.0
25C□ A11	117	109.3	$160\ ^{0}_{-0.040}$	$40\ ^{+0.3}_{+0.1}$	$107\ ^{0}_{-0.035}$	15.0

• Flange Specification 4

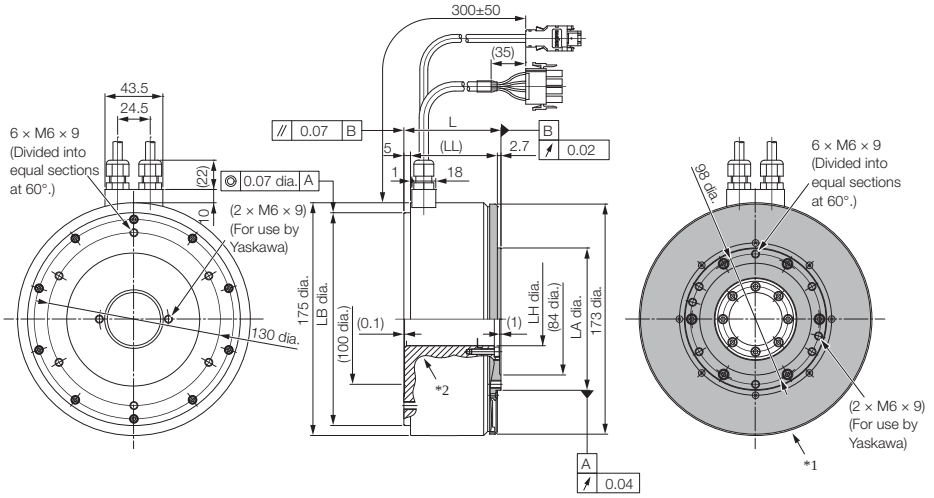

Unit: mm

*1. The shaded section indicates the rotating parts.
*2. The hatched section indicates the non-rotating parts.
Note: Values in parentheses are reference dimensions.

Model SGM7F-	L	(LL)	LB	LH	LA	Approx. Mass [kg]
08C□ A41	73	65.3	$160\ ^{0}_{-0.040}$	$40\ ^{+0.3}_{+0.1}$	$107\ ^{0}_{-0.035}$	9.0
17C□ A41	87	79.3	$160\ ^{0}_{-0.040}$	$40\ ^{+0.3}_{+0.1}$	$107\ ^{0}_{-0.035}$	11.0
25C□ A41	117	109.3	$160\ ^{0}_{-0.040}$	$40\ ^{+0.3}_{+0.1}$	$107\ ^{0}_{-0.035}$	15.0

Refer to the following section for information on connectors.

☞ **Connector Specifications (page 180)**

◆ SGM7F-□ □ D

• Flange Specification 1

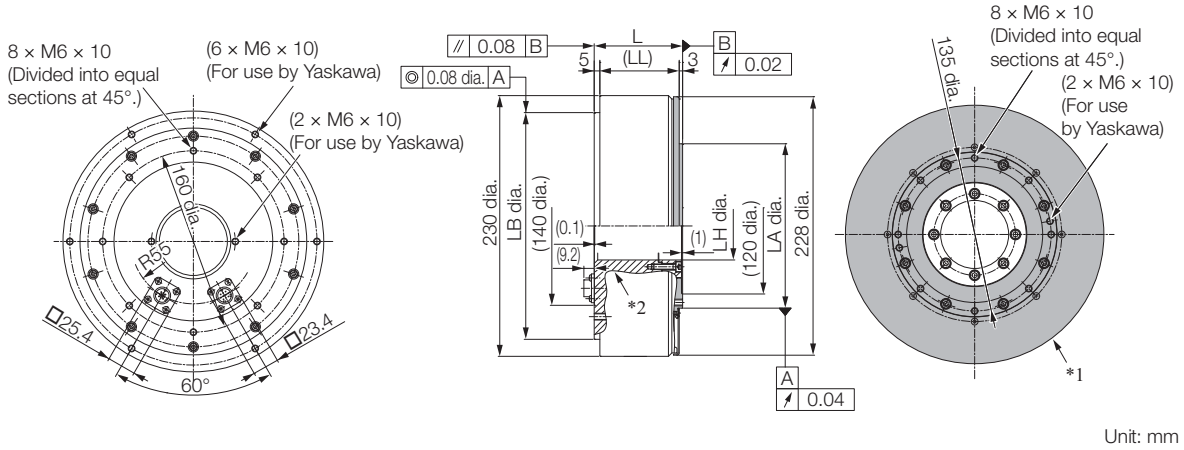

Unit: mm

*1. The shaded section indicates the rotating parts.
*2. The hatched section indicates the non-rotating parts.
Note: Values in parentheses are reference dimensions.

Model SGM7F-	L	(LL)	LB	LH	LA	Approx. Mass [kg]
16D□ A11	78	70	$200^{\ 0}_{-0.046}$	$60^{+0.4}_{\ 0}$	$145^{\ 0}_{-0.040}$	16.0
35D□ A11	107	99	$200^{\ 0}_{-0.046}$	$60^{+0.4}_{\ 0}$	$145^{\ 0}_{-0.040}$	25.0

• Flange Specification 4

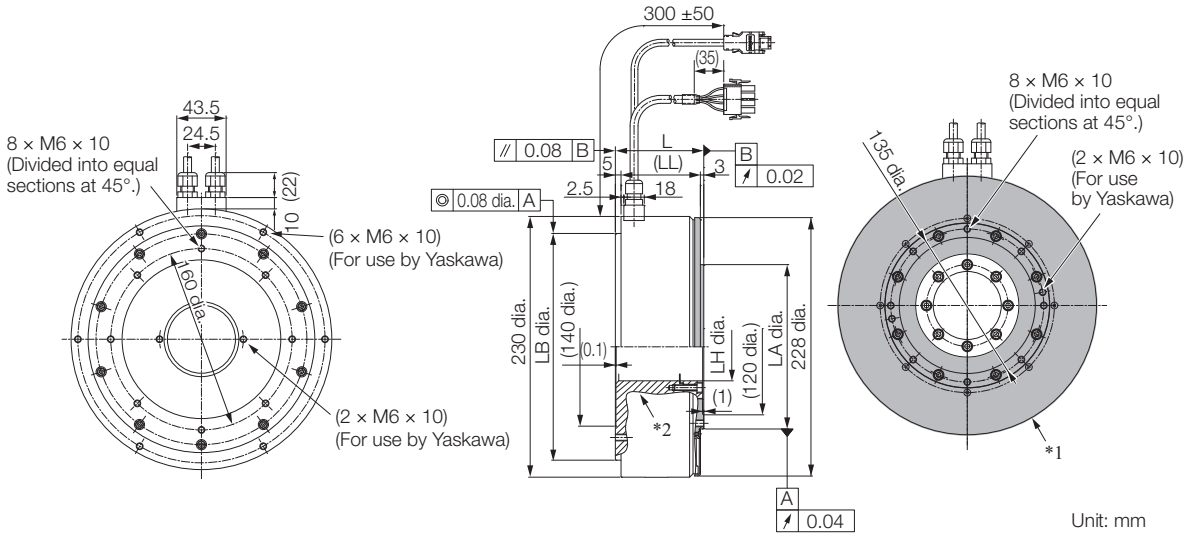

Unit: mm

*1. The shaded section indicates the rotating parts.
*2. The hatched section indicates the non-rotating parts.
Note: Values in parentheses are reference dimensions.

Model SGM7F-	L	(LL)	LB	LH	LA	Approx. Mass [kg]
16D□ A41	78	70	$200^{\ 0}_{-0.046}$	$60^{+0.4}_{\ 0}$	$145^{\ 0}_{-0.040}$	16.0
35D□ A41	107	99	$200^{\ 0}_{-0.046}$	$60^{+0.4}_{\ 0}$	$145^{\ 0}_{-0.040}$	25.0

Refer to the following section for information on connectors.

☞ **Connector Specifications (page 180)**

Connector Specifications

◆ SGM7F-☐ ☐ A, -☐ ☐ B, -☐ ☐ C, or -☐ ☐ D: Flange Specification 1

• Servomotor Connector

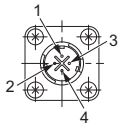

1	Phase U
2	Phase V
3	Phase W
4	FG (frame ground)

Model: JN1AS04MK2R
Manufacturer: Japan Aviation Electronics Industry, Ltd.

Mating connector: JN1DS04FK1
(Not provided by Yaskawa.)

• Encoder Connector

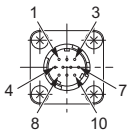

1	PS
2	/PS
3	–
4	PG5V
5*	BAT0
6	–
7	FG (frame ground)
8*	BAT
9	PG0V
10	–

* Only absolute-value models with multiturn data.

Model: JN1AS10ML1-R
Manufacturer: Japan Aviation Electronics Industry, Ltd.

Mating connector: JN1DS10SL1
(Not provided by Yaskawa.)

◆ SGM7F-☐ ☐ A, -☐ ☐ B, -☐ ☐ C, or -☐ ☐ D: Flange Specification 4

• Servomotor Connector



1	Phase U	Red
2	Phase V	White
3	Phase W	Blue
4	FG (frame ground)	Green (yellow)

Models
- Plug: 350779-1
- Pins: 350561-3 or 350690-3 (No.1 to 3)
- Ground pin: 350654-1 or 350669-1 (No. 4)

Manufacturer: Tyco Electronics Japan G.K.

Mating Connector
- Cap: 350780-1
- Socket: 350570-3 or 350689-3

• Encoder Connector

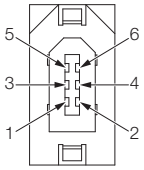

1	PG5V
2	PG0V
3*	BAT
4*	BAT0
5	PS
6	/PS
Connector case	FG (frame ground)

* Only absolute-value models with multiturn data.

Model: 55102-0600
Manufacturer: Molex Japan LLC

Mating connector: 54280-0609

Selecting Cables

◆ Cable Configurations

The cables shown below are required to connect a Servomotor to a SERVOPACK.

Encoder Cable of 20 m or Less

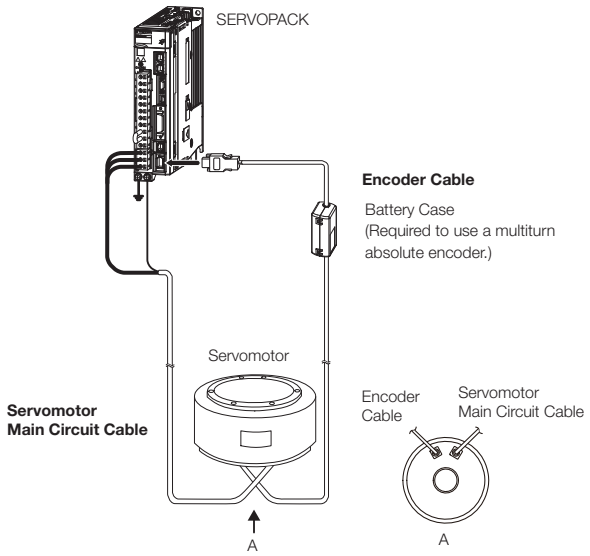

Encoder Cable of 30 m to 50 m (Relay Cable)

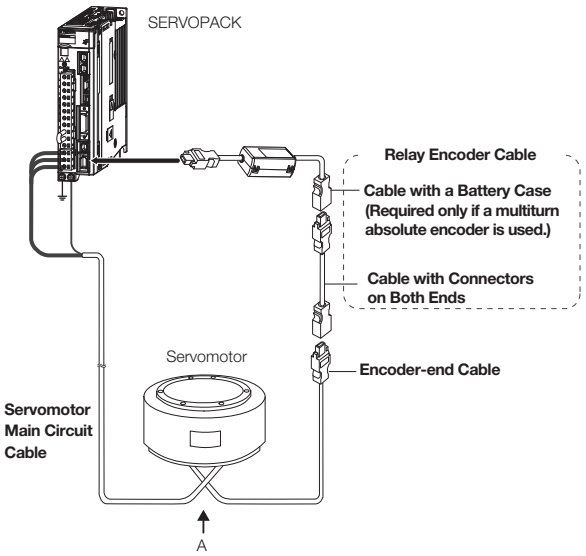

Note: 1. If the Encoder Cable length exceeds 20 m, be sure to use a Relay Encoder Cable.

2. If you use a Servomotor Main Circuit Cable that exceeds 20 m, the intermittent duty zone in the torque-motor speed characteristics will become smaller because the voltage drop increases.

3. Refer to the following manual for the following information.
   - Cable dimensional drawings and cable connection specifications
   - Order numbers and specifications of individual connectors for cables
   - Order numbers and specifications for wiring materials

   📖 **Σ-7-Series AC Servo Drive Peripheral Device Selection Manual (Manual No.: SIEP S800001 32)**

◆ Servomotor Main Circuit Cables

Servomotor Model	Length (L)	Order Number		Appearance
		Standard Cable	Flexible Cable*1	
SGM7F-□ □ A SGM7F-□ □ B SGM7F-□ □ C SGM7F-□ □ D Flange specification*2: 1 Non-load side installation	3 m	JZSP-CMM60-03-E	JZSP-C7MDN23-03-E	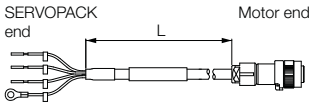
	5 m	JZSP-CMM60-05-E	JZSP-C7MDN23-05-E	
	10 m	JZSP-CMM60-10-E	JZSP-C7MDN23-10-E	
	15 m	JZSP-CMM60-15-E	JZSP-C7MDN23-15-E	
	20 m	JZSP-CMM60-20-E	JZSP-C7MDN23-20-E	
SGM7F-□ □ A SGM7F-□ □ B SGM7F-□ □ C SGM7F-□ □ D Flange specification*2: 4 Non-load side installation (with cable on side)	3 m	JZSP-CMM00-03-E	JZSP-C7MDS23-03-E	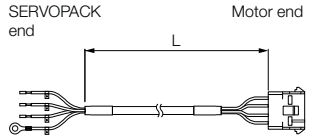
	5 m	JZSP-CMM00-05-E	JZSP-C7MDS23-05-E	
	10 m	JZSP-CMM00-10-E	JZSP-C7MDS23-10-E	
	15 m	JZSP-CMM00-15-E	JZSP-C7MDS23-15-E	
	20 m	JZSP-CMM00-20-E	JZSP-C7MDS23-20-E	

*1. Use Flexible Cables for moving parts of machines, such as robots. Flexible cable recommended bending radius is listed in the following table

*2. Refer to the following section for the flange specifications.

☞ **Model Designations (page 170)**

Note: Direct Drive Servomotors are not available with holding brakes.

◆ Encoder Cables of 20 m or Less

Servomotor Model	Name	Length (L)	Order Number		Appearance
			Standard Cable	Flexible Cable*1	
SGM7F-□ □ □ F Flange specification*2: 1 or 3	For incremental encoder	3 m	JZSP-CMP60-03-E	JZSP-CSP60-03-E	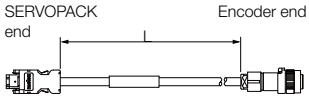
		5 m	JZSP-CMP60-05-E	JZSP-CSP60-05-E	
		10 m	JZSP-CMP60-10-E	JZSP-CSP60-10-E	
		15 m	JZSP-CMP60-15-E	JZSP-CSP60-15-E	
		20 m	JZSP-CMP60-20-E	JZSP-CSP60-20-E	
SGM7F-□ □ AF SGM7F-□ □ BF SGM7F-□ □ CF SGM7F-□ □ DF Flange specification*2: 4		3 m	JZSP-CMP00-03-E	JZSP-CMP10-03-E	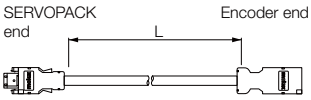
		5 m	JZSP-CMP00-05-E	JZSP-CMP10-05-E	
		10 m	JZSP-CMP00-10-E	JZSP-CMP10-10-E	
		15 m	JZSP-CMP00-15-E	JZSP-CMP10-15-E	
		20 m	JZSP-CMP00-20-E	JZSP-CMP10-20-E	

Servomotor Model	Name	Length (L)	Order Number		Appearance
			Standard Cable	Flexible Cable*1	
SGM7F-□ □ □ 7 Flange specification*2: 1 or 3	For multi-turn absolute encoder (without Battery Case*3)	3 m	JZSP-C7PI00-03-E	JZSP-C7PI20-03-E	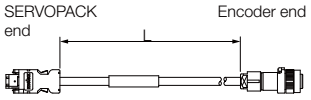
		5 m	JZSP-C7PI00-05-E	JZSP-C7PI20-05-E	
		10 m	JZSP-C7PI00-10-E	JZSP-C7PI20-10-E	
		15 m	JZSP-C7PI00-15-E	JZSP-C7PI20-15-E	
		20 m	JZSP-C7PI00-20-E	JZSP-C7PI20-20-E	
	For multi-turn absolute encoder (with Battery Case)	3 m	JZSP-C7PA00-03-E	JZSP-C7PA20-03-E	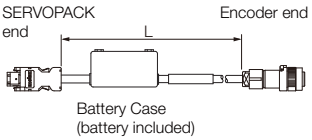
		5 m	JZSP-C7PA00-05-E	JZSP-C7PA20-05-E	
		10 m	JZSP-C7PA00-10-E	JZSP-C7PA20-10-E	
		15 m	JZSP-C7PA00-15-E	JZSP-C7PA20-15-E	
		20 m	JZSP-C7PA00-20-E	JZSP-C7PA20-20-E	
SGM7F-□ □ A7 SGM7F-□ □ B7 SGM7F-□ □ C7 SGM7F-□ □ D7 Flange specification*2: 4	For multi-turn absolute encoder (without Battery Case*3)	3 m	JZSP-CMP00-03-E	JZSP-CMP10-03-E	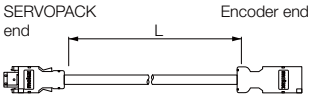
		5 m	JZSP-CMP00-05-E	JZSP-CMP10-05-E	
		10 m	JZSP-CMP00-10-E	JZSP-CMP10-10-E	
		15 m	JZSP-CMP00-15-E	JZSP-CMP10-15-E	
		20 m	JZSP-CMP00-20-E	JZSP-CMP10-20-E	
	For multi-turn absolute encoder (with Battery Case)	3 m	JZSP-CSP19-03-E	JZSP-CSP29-03-E	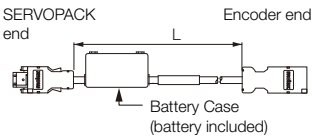
		5 m	JZSP-CSP19-05-E	JZSP-CSP29-05-E	
		10 m	JZSP-CSP19-10-E	JZSP-CSP29-10-E	
		15 m	JZSP-CSP19-15-E	JZSP-CSP29-15-E	
		20 m	JZSP-CSP19-20-E	JZSP-CSP29-20-E	

*1. Use Flexible Cables for moving parts of machines, such as robots. The recommended bending radius (R) is 68 mm or larger.
*2. Refer to the following section for the flange specifications.
☞ **Model Designations (page 170)**
*3. Use one of these Cables if a battery is connected to the host controller.

◆ Relay Encoder Cables of 30 m to 50 m

Servomotor Model	Name	Length (L)	Order Number[*1]	Appearance
SGM7F-□ □ □ F SGM7F-□ □ □ 7 Flange specification[*2]: 1 or 3	Encoder-end Cable (for single-turn/multiturn absolute encoder)	0.3 m	JZSP-C7PRC0-E	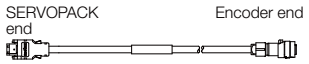
SGM7F-□ □ □ F SGM7F-□ □ □ 7 Flange specification[*2]: 1, 3 or 4	Cables with Connectors on Both Ends (for single-turn/multiturn absolute encoder)	30 m	JZSP-UCMP00-30-E	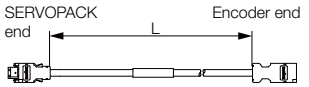
		40 m	JZSP-UCMP00-40-E	
		50 m	JZSP-UCMP00-50-E	
SGM7F-□ □ □ 7 Flange specification[*2]: 1, 3 or 4	Cable with a Battery Case (for multiturn absolute encoder)[*3]	0.3 m	JZSP-CSP12-E	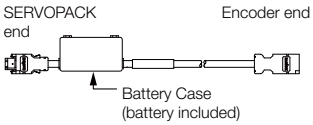

*1. Flexible Cables are not available.

*2. Refer to the following section for the flange specifications.

☞ **Model Designations (page 170)**

*3. Use one of these Cables if a battery is connected to the host controller.

SGM7D (With Core, Outer Rotor)

Model Designations

SGM7D - 30 F 7 C 5 2

Direct Drive Servomotors: SGM7D

1st+2nd digits | 3rd digit | 4th digit | 5th digit | 6th digit | 7th digit

1st+2nd digits Rated Torque

Code	Specification	Code	Specification	Code	Specification
01	1.30 N·m	18	18.0 N·m	58	58.0 N·m
02	2.06 N·m	20	20.0 N·m	70	70.0 N·m
03	3.00 N·m	24	24.0 N·m	90	90.0 N·m
05	5.00 N·m	28	28.0 N·m	1Z	100 N·m
06	6.00 N·m	30	30.0 N·m	1A	110 N·m
08	8.00 N·m	34	34.0 N·m	1C	130 N·m
09	9.00 N·m	38	38.0 N·m	2B	220 N·m
12	12.0 N·m	45	45.0 N·m	2D	240 N·m

3rd digit Servomotor Outer Diameter

Code	Specification	Code	Specification
F	264-mm dia.	J	150-mm dia.
G	160-mm dia.	K	107-mm dia.
H	116-mm dia.	L	224 mm × 224 mm
I	264-mm dia.		

Note: 1. Direct Drive Servomotors are not available with holding brakes.
2. This information is provided to explain model numbers.
It is not meant to imply that models are available for all combinations of codes.

4th digit Serial Encoder

Code	Specification
7	24-bit multiturn absolute encoder*
F	24-bit incremental encoder*

* Both multiturn absolute encoder and incremental encoder can be used as a single-turn absolute encoder by setting parameters.

5th digit Design Revision Order

C

6th digit Flange

Code	Mounting		Servomotor Outer Diameter Code (3rd Digit)						
			F	G	H	I	J	K	L
4	Non-load side	With cable on side	✓	✓	✓	-	-	-	✓
5		With cable on bottom	✓	✓*	-	✓	✓	✓	-

✓: Applicable models.
* SGM7D-01G and -05G are not available with a cable extending from the bottom.

7th digit Options

Code	Specification
1	Standard mechanical precision
2	High mechanical precision*

* The SGM7D-01G, -05G, and -03H are available only with high mechanical precision.

Shaded items are non-stock

SGM7D (With Core, Outer Rotor)

Manufactured Models

Rated Torque N·m	Servomotor Outer Diameter						
	F (264-mm dia.)	G (160-mm dia.)	H (116-mm dia.)	I (264-mm dia.)	J (150-mm dia.)	K (107-mm dia.)	L (224 mm × 224 mm)
1.30	–	SGM7D-01G	–	–	–	–	–
2.06	–	–	–	–	–	SGM7D-02K	–
3.00	–	–	SGM7D-03H	–	–	–	–
5.00	–	SGM7D-05G	–	–	–	–	–
6.00	–	–	–	–	SGM7D-06J	SGM7D-06K	SGM7D-06L
8.00	–	SGM7D-08G	–	–	–	SGM7D-08K	–
9.00	–	–	–	–	SGM7D-09J	–	–
12.0	–	–	–	–	–	–	SGM7D-12L
18.0	–	SGM7D-18G	–	–	SGM7D-18J	–	–
20.0	–	–	–	–	SGM7D-20J	–	–
24.0	–	SGM7D-24G	–	–	–	–	–
28.0	–	–	–	SGM7D-28I	–	–	–
30.0	SGM7D-30F	–	–	–	–	–	SGM7D-30L
34.0	–	SGM7D-34G	–	–	–	–	–
38.0	–	–	–	–	SGM7D-38J	–	–
45.0	–	SGM7D-45G	–	–	–	–	–
58.0	SGM7D-58F	–	–	–	–	–	–
70.0	–	–	–	SGM7D-70I	–	–	–
90.0	SGM7D-90F	–	–	–	–	–	–
100	–	–	–	SGM7D-1ZI	–	–	–
110	SGM7D-1AF	–	–	–	–	–	–
130	–	–	–	SGM7D-1CI	–	–	–
220	–	–	–	SGM7D-2BI	–	–	–
240	–	–	–	SGM7D-2DI	–	–	–

Note: The above table shows combinations of the rated torque and outer diameter. The fourth through seventh digits have been omitted.

Specifications and Ratings

Specifications

◆ SGM7D-☐ ☐ F, -☐ ☐ G, and -☐ ☐ H

Voltage				200 V										
Model SGM7D-				30F	58F	90F	1AF	01G	05G	08G	18G	24G	34G	45G	03H
Time Rating				Continuous											
Thermal Class				F											
Insulation Resistance				500 VDC, 10 MΩ min.											
Withstand Voltage				1,500 VAC for 1 minute											
Excitation				Three-phase											
Mounting				Flange-mounted											
Drive Method				Direct drive											
Rotation Direction				Counterclockwise (CCW) for forward reference when viewed from the load side											
Absolute Accuracy				±15 s											
Repeatability				±1.3 s											
Protective Structure*1				Totally enclosed, self-cooled, IP20				Totally enclosed, self-cooled, IP30		Totally enclosed, self-cooled, IP20					Totally enclosed, self-cooled, IP30
Environmental Conditions	Surrounding Air Temperature			0°C to 40°C (with no freezing)											
	Surrounding Air Humidity			20% to 80% relative humidity (with no condensation)											
	Installation Site			• Must be indoors and free of corrosive and explosive gases. • Must be well-ventilated and free of dust and moisture. • Must facilitate inspection and cleaning. • Must have an altitude of 1,000 m or less. • Must be free of strong magnetic fields.											
	Storage Environment			Store the Servomotor in the following environment if you store it with the power cable disconnected. Storage Temperature: -20°C to 60°C (with no freezing) Storage Humidity: 20% to 80% relative humidity (with no condensation)											
Mechanical Tolerances*2	Runout of Output Shaft Surface/Runout at End of Output Shaft	Standard Mechanical Precision	mm	0.1				–		0.1			0.1		–
		High Mechanical Precision	mm	0.005				0.01		0.005			0.01		
Applicable SERVOPACKs		SGD7S-		120A*3				2R8A*3, 2R8F*3		120A*3					2R8A*3, 2R8F*3
		SGD7W- SGD7C-		–											

*1. The hollow hole section, motor mounting surface, and gap around the rotating part on non-load side are excluded. Protective structure specifications apply only when the special cable is used.

*2. Refer to the following figure for the relevant locations on the Servomotor. Refer to the dimensional drawings of the individual Servomotors for more information on tolerances.

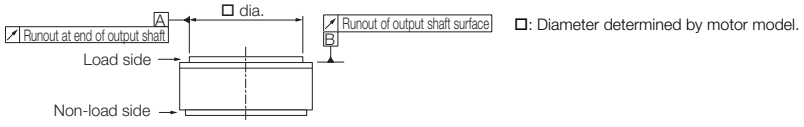

*3. An SGM7D Servomotor is used together with an FT-specification SERVOPACK. The following SERVOPACK models can be used.
- SGD7S-☐ ☐ ☐ ☐ ☐ ☐ A☐ ☐ ☐ F82☐
- SGD7S-☐ ☐ ☐ ☐ 00A☐ ☐ ☐ F83☐

◆ SGM7D-☐ ☐ I and -☐ ☐ J

Voltage				200 V								
Model SGM7D-				28I	70I	1ZI	1CI	2BI	2DI	06J	09J	18J	20J	38J
Time Rating				Continuous										
Thermal Class				F										
Insulation Resistance				500 VDC, 10 MΩ min.										
Withstand Voltage				1,500 VAC for 1 minute										
Excitation				Three-phase										
Mounting				Flange-mounted										
Drive Method				Direct drive										
Rotation Direction				Counterclockwise (CCW) for forward reference when viewed from the load side										
Absolute Accuracy				±15 s										
Repeatability				±1.3 s										
Protective Structure*1				Totally enclosed, self-cooled, IP30										
Environmental Conditions	Surrounding Air Temperature			0°C to 40°C (with no freezing)										
	Surrounding Air Humidity			20% to 80% relative humidity (with no condensation)										
	Installation Site			• Must be indoors and free of corrosive and explosive gases. • Must be well-ventilated and free of dust and moisture. • Must facilitate inspection and cleaning. • Must have an altitude of 1,000 m or less. • Must be free of strong magnetic fields.										
	Storage Environment			Store the Servomotor in the following environment if you store it with the power cable disconnected. Storage Temperature: -20°C to 60°C (with no freezing) Storage Humidity: 20% to 80% relative humidity (with no condensation)										
Mechanical Tolerances*2	Runout of Output Shaft Surface/ Runout at End of Output Shaft	Standard Mechanical Precision	mm	0.1										
		High Mechanical Precision	mm	0.005			0.02			0.005				0.01
Applicable SERVOPACKs		SGD7S-		120A*3										
		SGD7W- SGD7C-		–										

*1. The hollow hole section, motor mounting surface, and gap around the rotating part on non-load side are excluded. Protective structure specifications apply only when the special cable is used.

*2. Refer to the following figure for the relevant locations on the Servomotor. Refer to the dimensional drawings of the individual Servomotors for more information on tolerances.

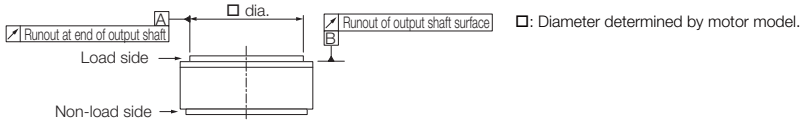

*3. An SGM7D Servomotor is used together with an FT-specification SERVOPACK. The following SERVOPACK models can be used.
- SGD7S-☐ ☐ ☐ ☐ ☐ ☐ A☐ ☐ ☐ F82☐
- SGD7S-☐ ☐ ☐ ☐ 00A☐ ☐ ☐ F83☐

◆ SGM7D-☐ ☐ K and -☐ ☐ L

Voltage				200 V					
Model SGM7D-				02K	06K	08K	06L	12L	30L
Time Rating				Continuous					
Thermal Class				F					
Insulation Resistance				500 VDC, 10 MΩ min.					
Withstand Voltage				1,500 VAC for 1 minute					
Excitation				Three-phase					
Mounting				Flange-mounted					
Drive Method				Direct drive					
Rotation Direction				Counterclockwise (CCW) for forward reference when viewed from the load side					
Absolute Accuracy				±15 s					
Repeatability				±1.3 s					
Protective Structure*1				Totally enclosed, self-cooled, IP30					
Environmental Conditions	Surrounding Air Temperature			0°C to 40°C (with no freezing)					
	Surrounding Air Humidity			20% to 80% relative humidity (with no condensation)					
	Installation Site			• Must be indoors and free of corrosive and explosive gases. • Must be well-ventilated and free of dust and moisture. • Must facilitate inspection and cleaning. • Must have an altitude of 1,000 m or less. • Must be free of strong magnetic fields.					
	Storage Environment			Store the Servomotor in the following environment if you store it with the power cable disconnected. Storage Temperature: -20°C to 60°C (with no freezing) Storage Humidity: 20% to 80% relative humidity (with no condensation)					
Mechanical Tolerances*2	Runout of Output Shaft Surface/ Runout at End of Output Shaft	Standard Mechanical Precision	mm	0.1			0.05		
		High Mechanical Precision	mm	0.01			0.005		
Applicable SERVOPACKs		SGD7S-		2R8A*3, 2R8F*3					120A*3
		SGD7W- SGD7C-		–					

*1. The hollow hole section, motor mounting surface, and gap around the rotating part on non-load side are excluded. Protective structure specifications apply only when the special cable is used.

*2. Refer to the following figure for the relevant locations on the Servomotor. Refer to the dimensional drawings of the individual Servomotors for more information on tolerances.

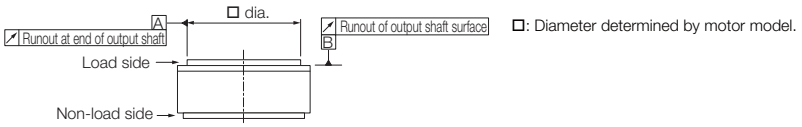

*3. An SGM7D Servomotor is used together with an FT-specification SERVOPACK. The following SERVOPACK models can be used.
- SGD7S-☐ ☐ ☐ ☐ ☐ ☐ A☐ ☐ ☐ F82☐
- SGD7S-☐ ☐ ☐ ☐ 00A☐ ☐ ☐ F83☐

Ratings

◆ SGM7D-☐ ☐ F, -☐ ☐ G, and -☐ ☐ H

Voltage				200 V											
Model SGM7D-				30F	58F	90F	1AF	01G	05G	08G	18G	24G	34G	45G	03H
Rated Output			W	188	364	565	691	16	63	101	226	302	320	565	38
Rated Torque*1			N·m	30.0	58.0	90.0	110	1.30	5.00	8.00	18.0	24.0	34.0	45.0	3.00
Rated Intermittent Torque*2			N·m	–	–	–	–	–	–	–	–	27.0	40.0	52.0	–
Instantaneous Maximum Torque			N·m	50.0	100	150	200	4.00	6.00	15.0	30.0	45.0	60.0	75.0	4.00
Stall Torque			N·m	30.0	58.0	90.0	110	1.30	5.00	8.00	18.0	24.0	34.0	45.0	3.00
Rated Current			Arms	5.7	6.4	5.9	5.0	1.7	1.6	3.4	3.4	3.1	3.3	4.8	1.1
Instantaneous Maximum Current			Arms	14.1				4.2	3.5	10.6					3.5
Rated Motor Speed			min^{-1}	60				120					90	120	120
Maximum Motor Speed			min^{-1}	72				150		144					150
Torque Constant			N·m/ Arms	6.25	12.5	17.8	24.5	1.09	3.84	2.82	5.76	8.57	11.2	10.2	3.01
Motor Moment of Inertia			$\times 10^{-4}$ $kg \cdot m^2$	960	1190	1420	1670	55.0	75.0	120	150	190	230	270	25.0
Rated Power Rate			kW/s	9.38	28.3	57.0	72.5	0.307	3.33	5.33	21.6	30.3	50.3	75.0	3.60
Rated Angular Acceleration Rate			rad/s^2	313	487	634	659	236	667	667	1200	1260	1480	1670	1200
Heat Sink Size			mm	550 × 550 × 30 (aluminum)											350 × 350 × 20 (steel)
Allowable Load Moment of Inertia (Motor Moment of Inertia Ratio)			times	200 500*4	150 400*4	150 350*4	130 300*4	130	300	400 1000*4	350 900*4	300 750*4	250 650*4	200 450*4	600
	With External Regenerative Resistor and External Dynamic Brake Resistor*3		times	2500	3500	4000	5000	130	300	2000	3000	4000	4000	4000	600
Allowable Loads*5	Allowable Thrust Load	Forward	N	4×10^4				50	200	3×10^4					50
		Reverse	N	2×10^4				50	200	1×10^4					50
	Allowable Moment Load		N·m	400				–	50	200					–
Rigidities	Thrust Displacement Rigidity	Forward	mm/N	2×10^{-6}				–		2.5×10^{-6}					–
		Reverse	mm/N	3×10^{-6}				–		3×10^{-6}					–
	Moment Displacement Rigidity		rad/ N·m	4×10^{-7}				–		1×10^{-6}					–

*1. The rated torques are the continuous allowable torque values at a surrounding air temperature of 40°C with an aluminum or steel heat sink of the dimensions given in the table.

*2. The rated intermittent torque is the value for 60% ED.

*3. To externally connect dynamic brake resistance, select hardware option specification 020 for the SERVOPACK.
However, you cannot externally connect dynamic brake resistance if you use the following SERVOPACKs (maximum applicable motor capacity: 400 W).
- SGD7S-2R8☐ ☐ ☐ A020F82☐
- SGD7S-2R8☐ 00A020F83☐

*4. If you use an SGD7S-120A008 SERVOPACK and SGM7D Servomotor together, use the ratios given on the bottom line.

*5. The thrust loads and moment loads that are applied while a Servomotor is operating are roughly classified into the following patterns. Design the machine so that the thrust loads or moment loads will not exceed the values given in the table.
The allowable load is for a static load in one direction. When designing the system, multiply the allowable load by the following safety coefficient depending on the type of load.
- Smooth load with no shock: 1/3
- Light repetitive load: 1/5
- Shock load: 1/10

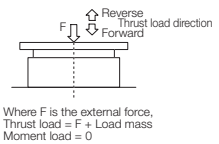

Where F is the external force,
Thrust load = F + Load mass
Moment load = 0

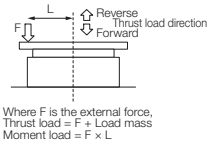

Where F is the external force,
Thrust load = F + Load mass
Moment load = F × L

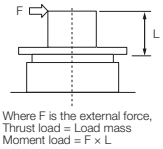

Where F is the external force,
Thrust load = Load mass
Moment load = F × L

Note: 1. These values are for operation in combination with a SERVOPACK when the temperature of the armature winding is 20°C. These are typical values.
2. For the bearings used in these Servomotors, the loss depends on the bearing temperature. The amount of heat loss is higher at low temperatures.

◆ SGM7D-☐ ☐ I and -☐ ☐ J

Voltage				200 V									
Model SGM7D-				28I	70I	1ZI	1CI	2BI	2DI	06J	09J	18J	20J	38J
Rated Output			W	264	440	628	817	691	754	75	113	226	251	358
Rated Torque*1			N·m	28.0	70.0	100	130	220	240	6.00	9.00	18.0	20.0	38.0
Instantaneous Maximum Torque			N·m	50.0	100	150	200	300	400	8.00	15.0	30.0	45.0	60.0
Stall Torque			N·m	28.0	70.0	100	130	220	240	6.00	9.00	18.0	20.0	38.0
Rated Current			Arms	5.2	5.6	5.5	5.0	5.6	4.8	4.0	3.4	3.0	2.2	3.1
Instantaneous Maximum Current			Arms	14.1						10.6				
Rated Motor Speed			min^{-1}	90	60			30		120				90
Maximum Motor Speed			min^{-1}	108	72			60	48	144				
Torque Constant			N·m/ Arms	6.90	13.9	20.8	27.8	41.5	54.4	1.71	3.29	6.62	9.88	13.3
Motor Moment of Inertia			$\times 10^{-4}$ $kg·m^2$	1800	2000	2300	2850	3400	4000	150	210	240	260	330
Rated Power Rate			kW/s	4.36	24.5	43.5	59.3	142	144	2.40	3.86	13.5	15.4	43.8
Rated Angular Acceleration Rate			rad/s^2	156	350	435	456	647	600	400	429	750	769	1150
Heat Sink Size			mm	550 × 550 × 30										
Allowable Load Moment of Inertia (Motor Moment of Inertia Ratio)			times	50 125*2	100 250*2	90 230*2	80 200*2	100	150	350 700*2	250 600*2	240 550*2	220 550*2	180 450*2
	With External Regenerative Resistor and External Dynamic Brake Resistor*3		times	800	2000	2500	3000	100	150	700	900	2500	2000	2000
Allowable Loads*3	Allowable Thrust Load	Forward	N	4×10^4						3×10^4				
		Reverse	N	2×10^4						1×10^4				
	Allowable Moment Load		N·m	400						200				
Rigidities	Thrust Displacement Rigidity	Forward	mm/N	2×10^{-6}						3×10^{-6}				
		Reverse	mm/N	3×10^{-6}						4×10^{-6}				
	Moment Displacement Rigidity		rad/ N·m	4×10^{-7}						2×10^{-6}				

*1. The rated torques are the continuous allowable torque values at a surrounding air temperature of 40°C with an aluminum heat sink of the dimensions given in the table.

*2. If you use an SGD7S-120A008 SERVOPACK and SGM7D Servomotor together, use the ratios given on the bottom line.

*3. The thrust loads and moment loads that are applied while a Servomotor is operating are roughly classified into the following patterns. Design the machine so that the thrust loads or moment loads will not exceed the values given in the table. The allowable load is for a static load in one direction.
When designing the system, multiply the allowable load by the following safety coefficient depending on the type of load.
- Smooth load with no shock: 1/3
- Light repetitive load: 1/5
- Shock load: 1/10

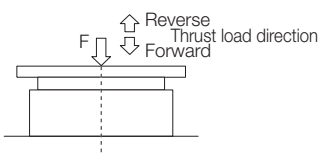

Where F is the external force,
Thrust load = F + Load mass
Moment load = 0

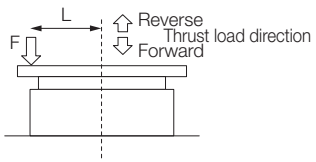

Where F is the external force,
Thrust load = F + Load mass
Moment load = F × L

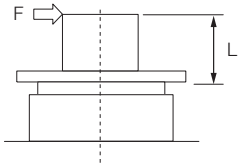

Where F is the external force,
Thrust load = Load mass
Moment load = F × L

Note: 1. These values are for operation in combination with a SERVOPACK when the temperature of the armature winding is 20°C. These are typical values.
2. For the bearings used in these Servomotors, the loss depends on the bearing temperature. The amount of heat loss is higher at low temperatures.

◆ SGM7D-☐ ☐ K and -☐ ☐ L

Voltage				200 V					
Model SGM7D-				02K	06K	08K	06L	12L	30L
Rated Output			W	52	151	201	113	226	565
Rated Torque*1			N·m	2.06	6.00	8.00	6.00	12.0	30.0
Repetitive Rated Torque*2			N·m	–	6.90	–	–	–	–
Instantaneous Maximum Torque			N·m	5.00	10.0	15.0	10.0	20.0	40.0
Stall Torque			N·m	2.06	6.00	8.00	6.00	12.0	30.0
Rated Current			Arms	1.6	1.8	1.6	1.7	2.1	8.1
Instantaneous Maximum Current			Arms	4.2			4.2	4.2	14.1
Rated Motor Speed			min^{-1}	240			180		
Maximum Motor Speed			min^{-1}	360			216		
Torque Constant			N·m/Arms	1.83	3.67	5.50	4.13	6.59	3.95
Motor Moment of Inertia			$\times 10^{-4}$ kg·m^2	60.0	70.0	80.0	220	220	370
Rated Power Rate			kW/s	0.707	5.14	8.00	1.64	6.55	24.3
Rated Angular Acceleration Rate			rad/s^2	343	857	1000	273	545	811
Heat Sink Size			mm	550 × 550 × 30			650 × 650 × 30		
Allowable Load Moment of Inertia (Motor Moment of Inertia Ratio)			times	200	350	25	450	20	60 130*4
	With External Regenerative Resistor and External Dynamic Brake Resistor*3		times	200	350	25	450	20	3500
Allowable Loads*5	Allowable Thrust Load	Forward	N	5×10^3			2000		
		Reverse	N	3×10^3			1000		
	Allowable Moment Load		N·m	20			100		
Rigidities	Thrust Displacement Rigidity	Forward	mm/N	4×10^{-6}			–		
		Reverse	mm/N	8×10^{-6}			–		
	Moment Displacement Rigidity		rad/N·m	8×10^{-6}			–		

*1. The rated torques are the continuous allowable torque values at a surrounding air temperature of 40°C with an aluminum heat sink of the dimensions given in the table.

*2. The rated intermittent torque is the value for 60% ED.

*3. To externally connect dynamic brake resistance, select hardware option specification 020 for the SERVOPACK.
However, you cannot externally connect dynamic brake resistance if you use the following SERVOPACKs (maximum applicable motor capacity: 400 W).
- SGD7S-2R8☐ ☐ ☐ A020F82☐
- SGD7S-2R8☐ 00A020F83☐

*4. If you use an SGD7S-120A008 SERVOPACK and SGM7D Servomotor together, use the ratios given on the bottom line.

*5. The thrust loads and moment loads that are applied while a Servomotor is operating are roughly classified into the following patterns. Design the machine so that the thrust loads or moment loads will not exceed the values given in the table.
The allowable load is for a static load in one direction.
When designing the system, multiply the allowable load by the following safety coefficient depending on the type of load.
- Smooth load with no shock: 1/3
- Light repetitive load: 1/5
- Shock load: 1/10

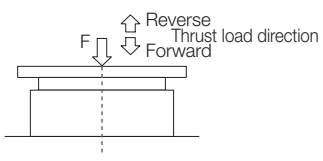

Where F is the external force,
Thrust load = F + Load mass
Moment load = 0

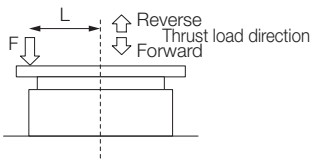

Where F is the external force,
Thrust load = F + Load mass
Moment load = F × L

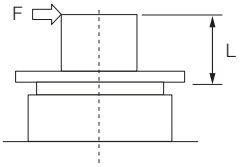

Where F is the external force,
Thrust load = Load mass
Moment load = F × L

Note: 1. These values are for operation in combination with a SERVOPACK when the temperature of the armature winding is 20°C. These are typical values.
2. For the bearings used in these Servomotors, the loss depends on the bearing temperature. The amount of heat loss is higher at low temperatures.

Torque-Motor Speed Characteristics

A : Continuous duty zone ..... (dotted lines): With 60%ED 10 min. duty factor
B : Intermittent duty zone* ——— (solid lines): With three-phase 200-V, single-phase 230-V, and single-phase 200-V input

SGM7D-30F

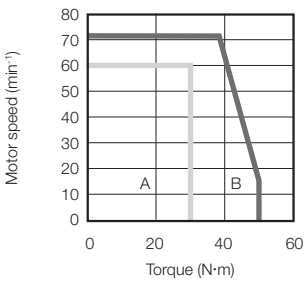

SGM7D-58F

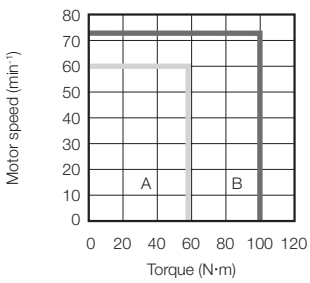

SGM7D-90F

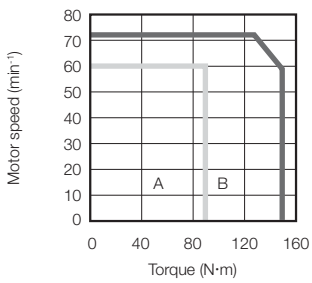

SGM7D-1AF

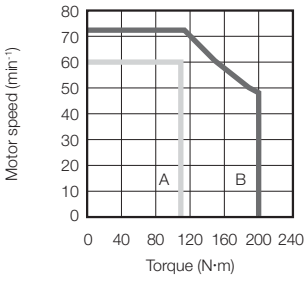

SGM7D-01G

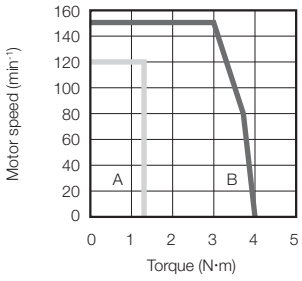

SGM7D-05G

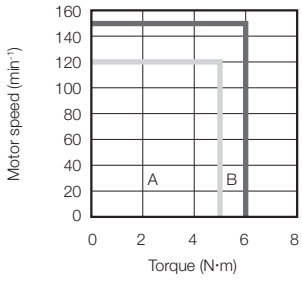

SGM7D-08G

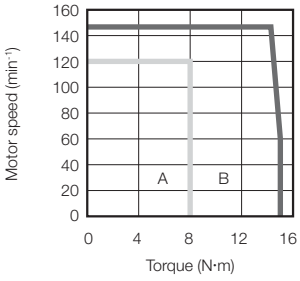

SGM7D-18G

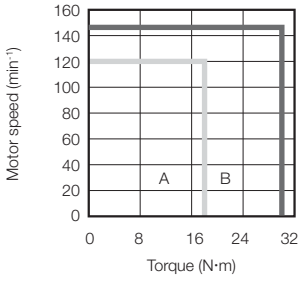

SGM7D-24G

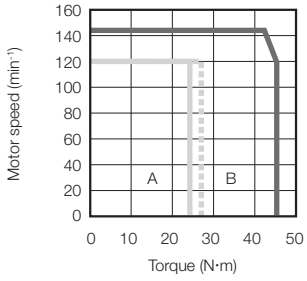

SGM7D-34G

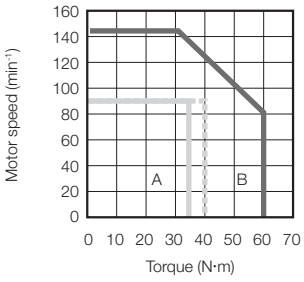

SGM7D-45G

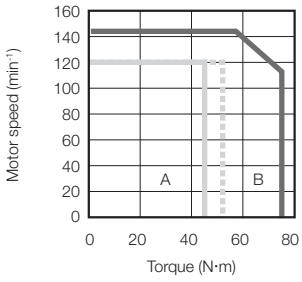

SGM7D-03H

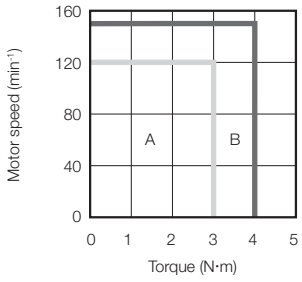

SGM7D-28I

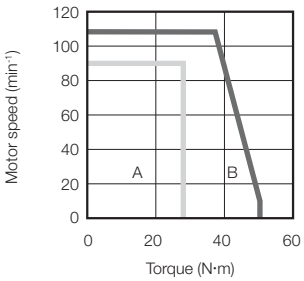

SGM7D-70I

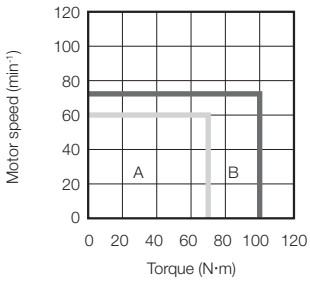

SGM7D-1ZI

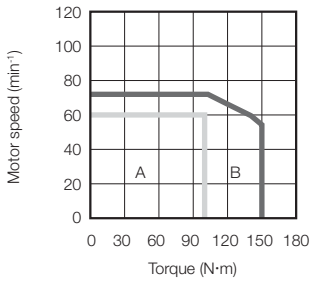

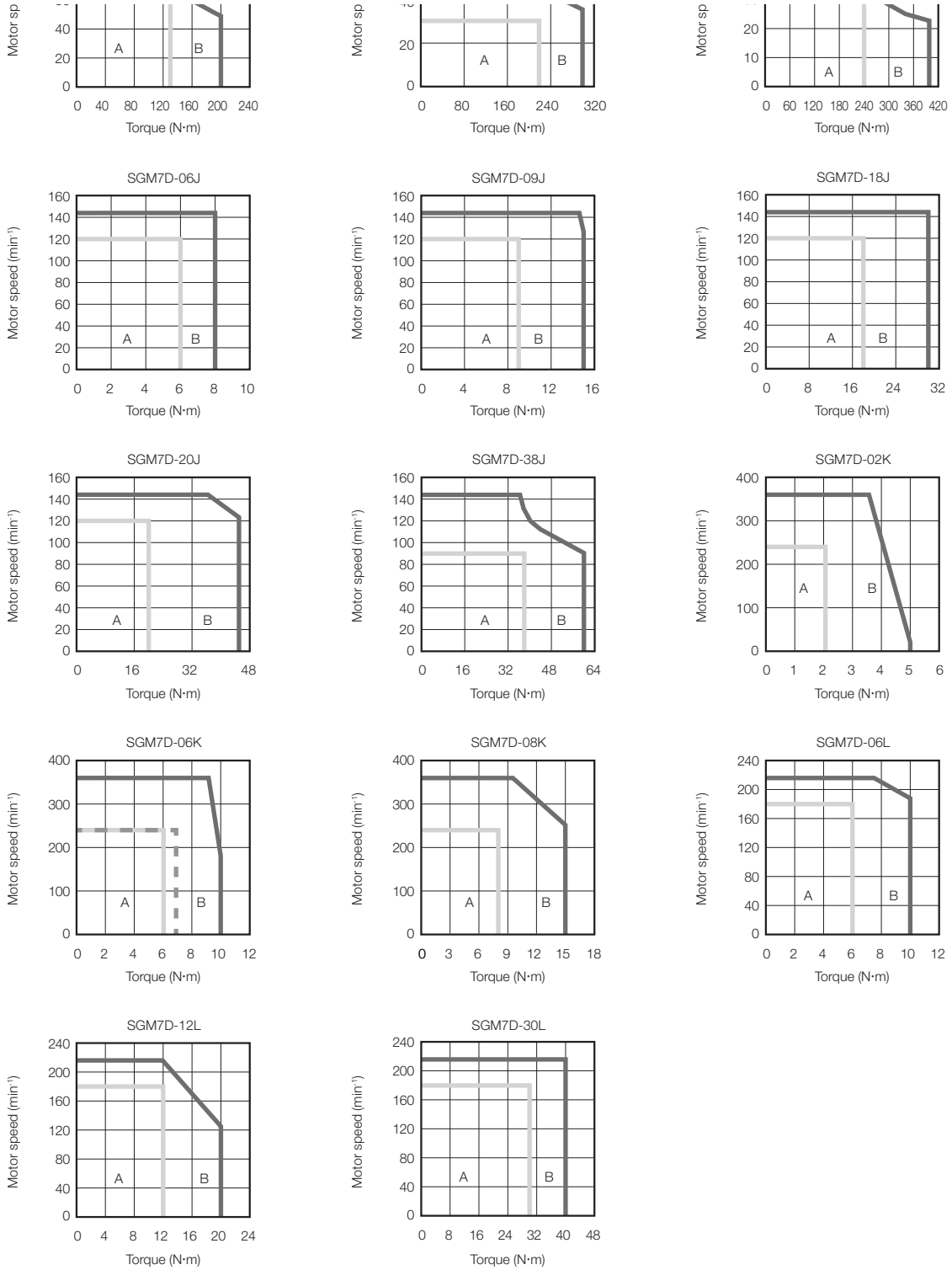

* The characteristics are the same for three-phase 200 V and single-phase 200 V input.
  Contact your Yaskawa representative for information on the characteristics for single-phase 100 V input.

Note: 1. These values (typical values) are for operation in combination with a SERVOPACK when the temperature of the armature winding is 20°C.

2. The characteristics in the intermittent duty zone depend on the power supply voltage.

3. If the effective torque is within the allowable range for the rated torque, the Servomotor can be used within the intermittent duty zone.

4. If you use a Servomotor Main Circuit Cable that exceeds 20 m, the intermittent duty zone in the torque-motor speed characteristics will become smaller because the voltage drop increases.

Servomotor Overload Protection Characteristics

The overload detection level is set for hot start conditions with a Servomotor surrounding air temperature of 40ºC.

SGM7D-30F

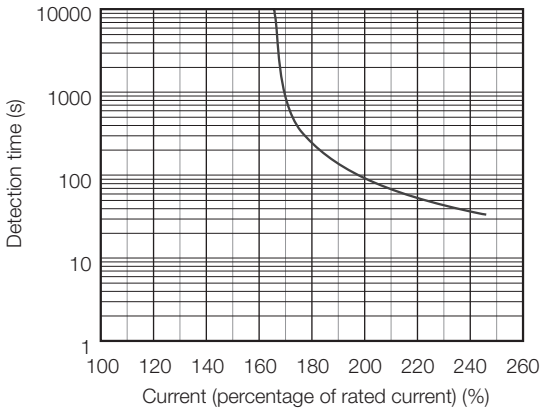

SGM7D-58F

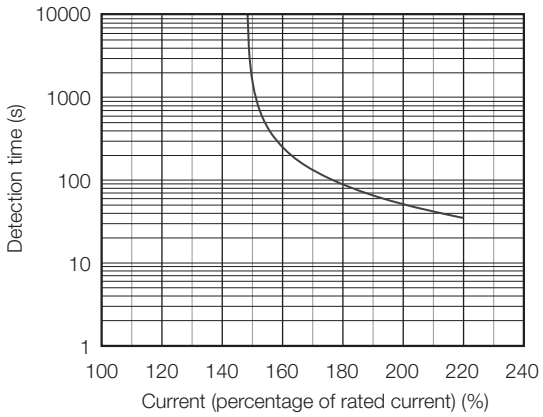

SGM7D-90F

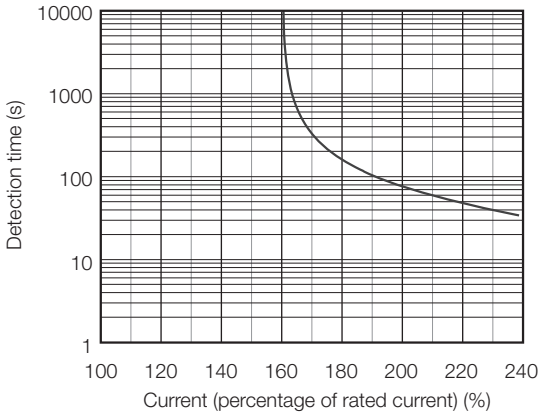

SGM7D-1AF

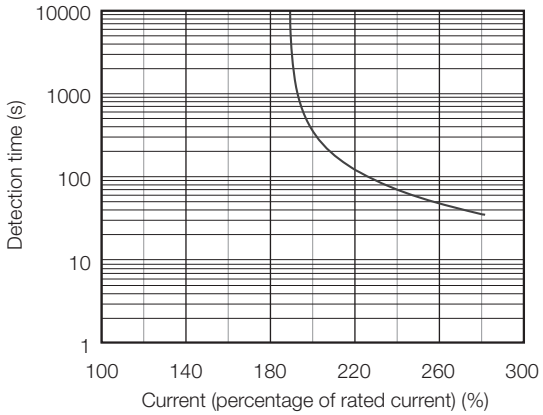

SGM7D-01G

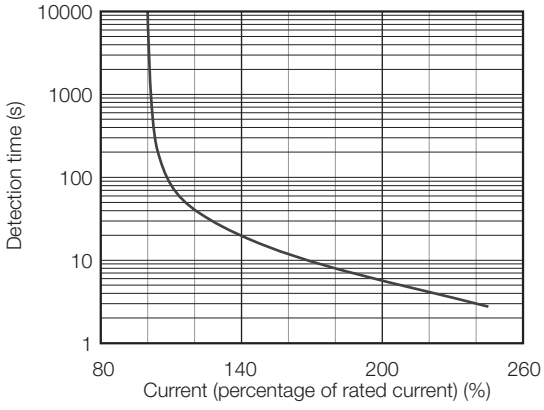

SGM7D-05G

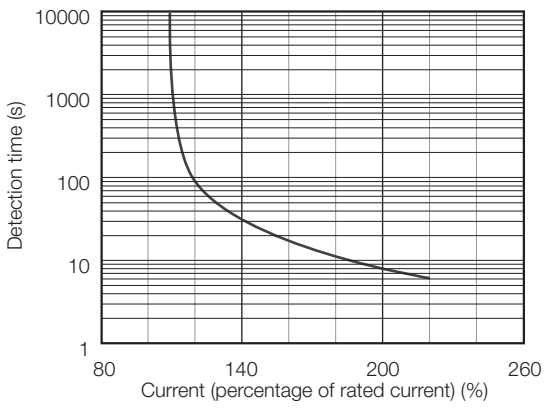

SGM7D-08G

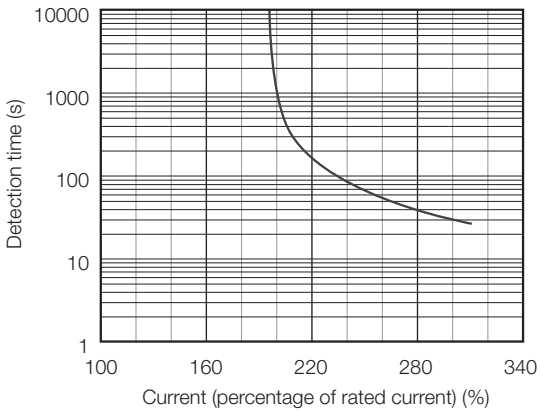

SGM7D-18G

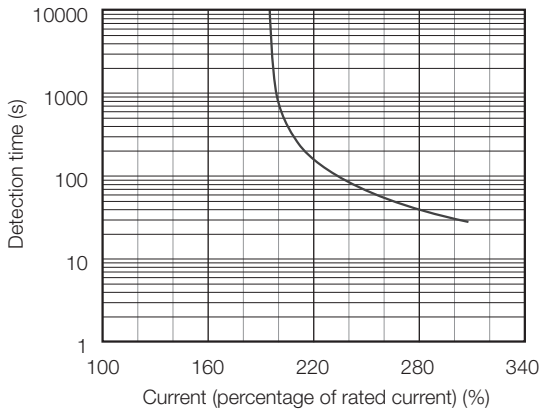

SGM7D-24G

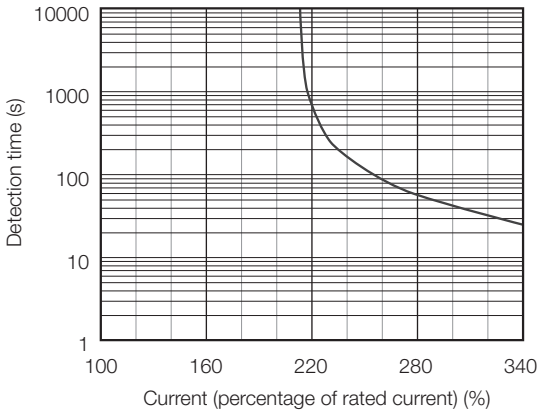

SGM7D-34G

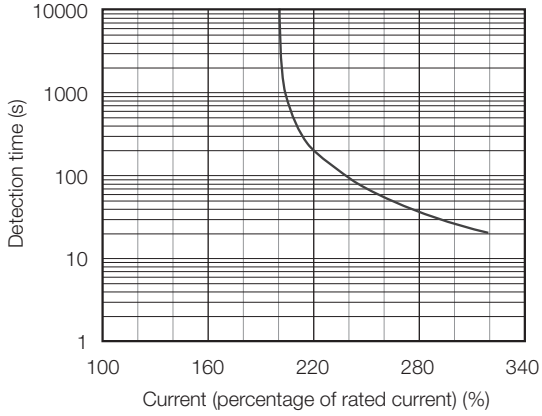

SGM7D-45G

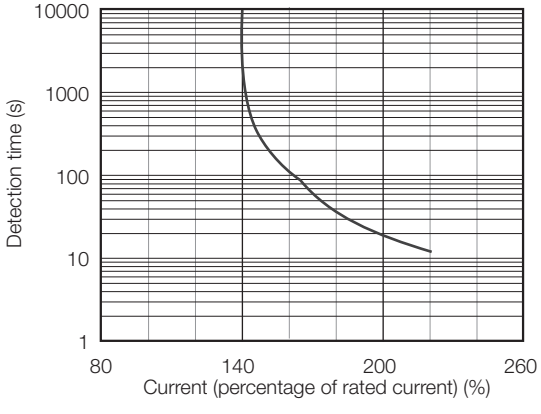

SGM7D-03H

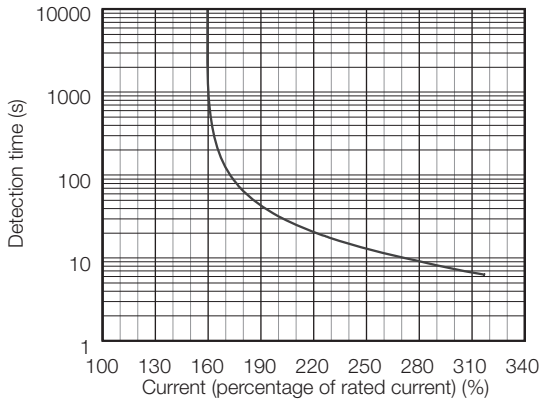

SGM7D-28I

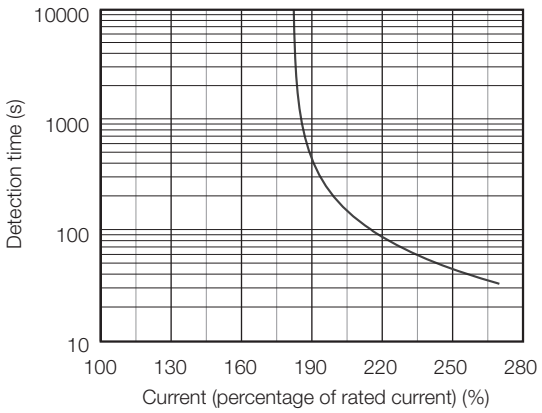

SGM7D-70I

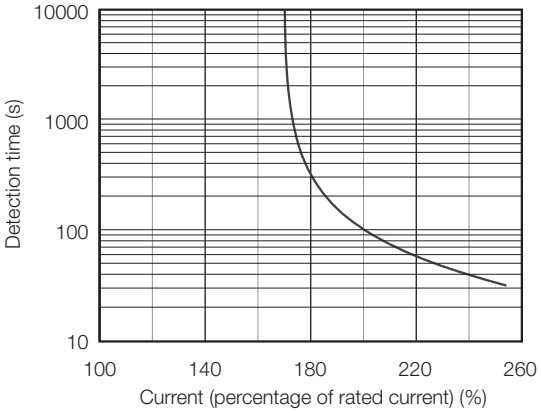

SGM7D-1ZI

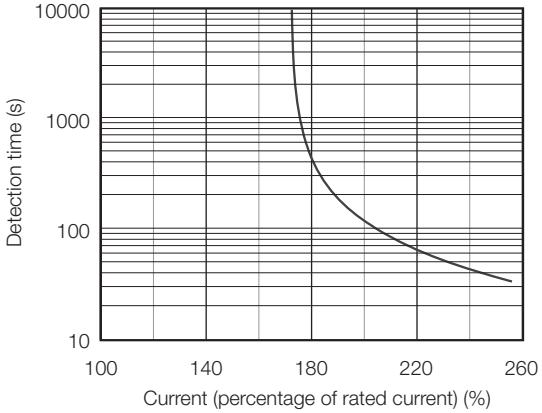

SGM7D-1CI

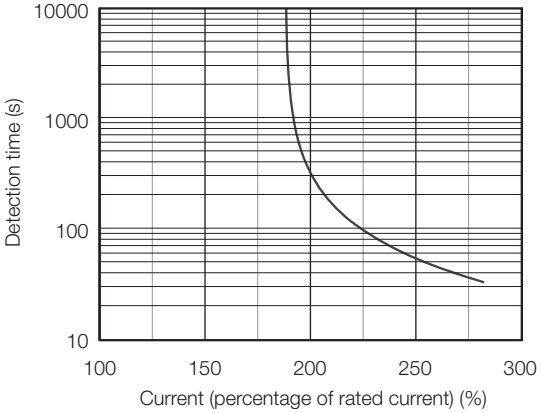

SGM7D-2BI

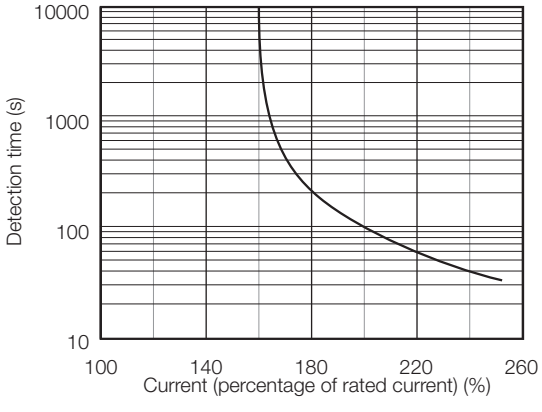

SGM7D-2DI

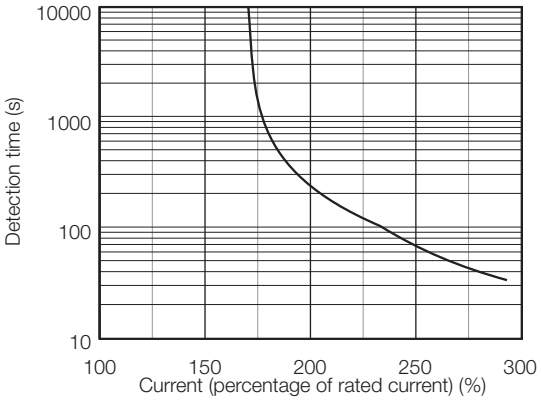

SGM7D-06J

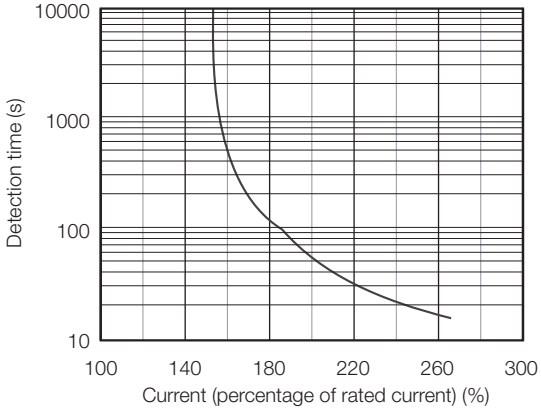

SGM7D-09J

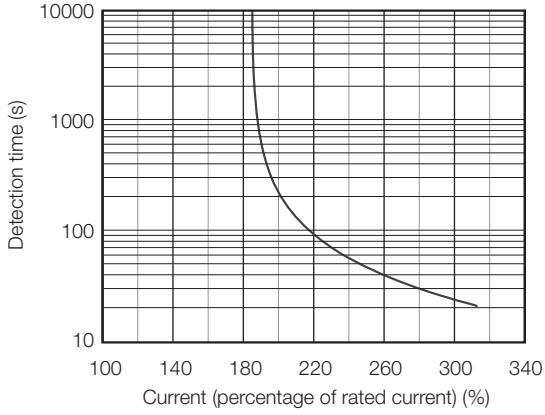

SGM7D-18J

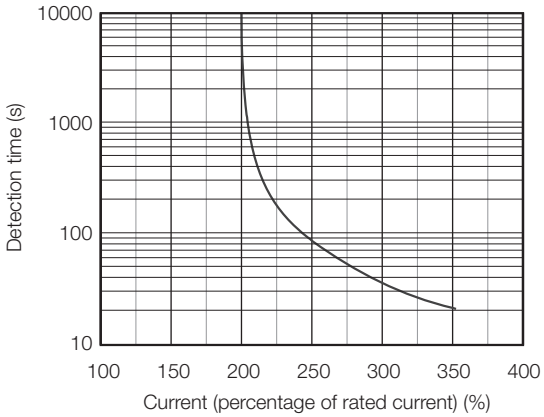

SGM7D-20J

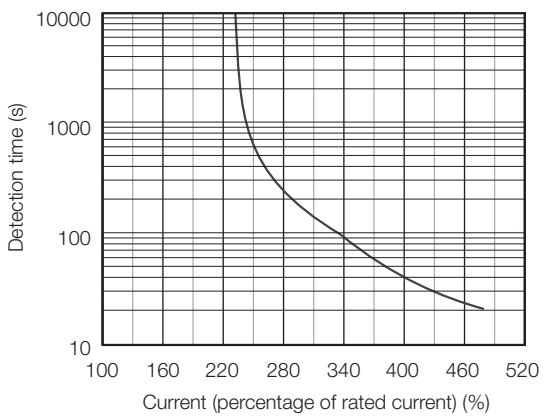

SGM7D-38J

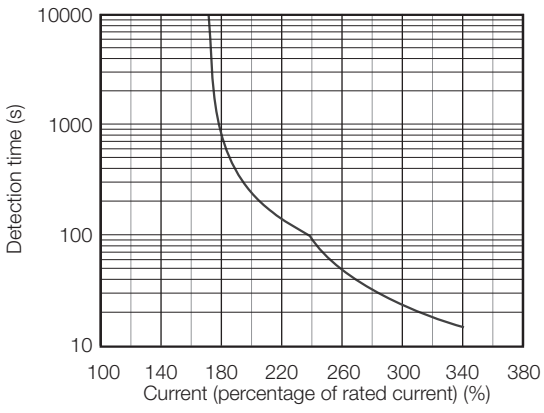

SGM7D-02K

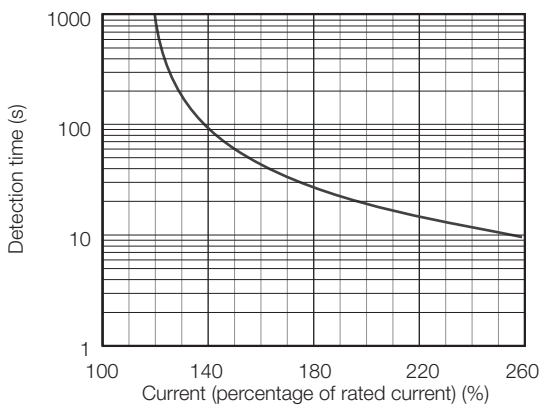

SGM7D-06K

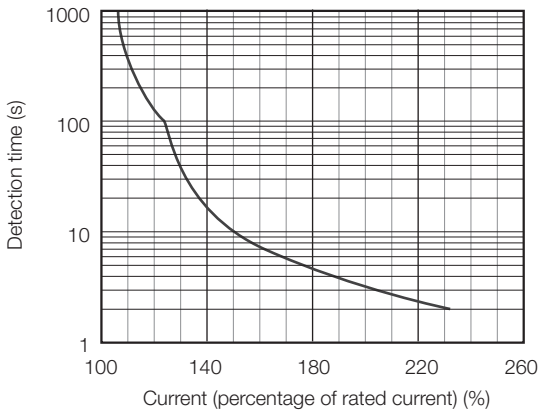

SGM7D-08K

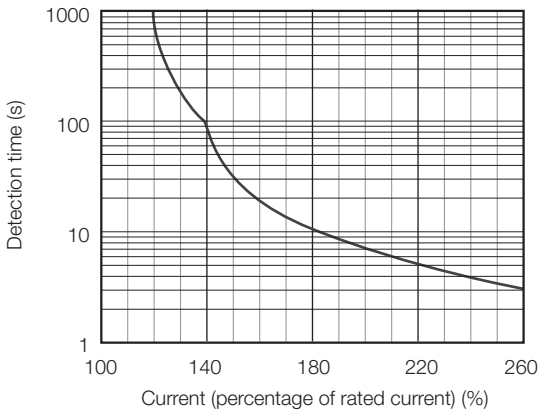

SGM7D-06L

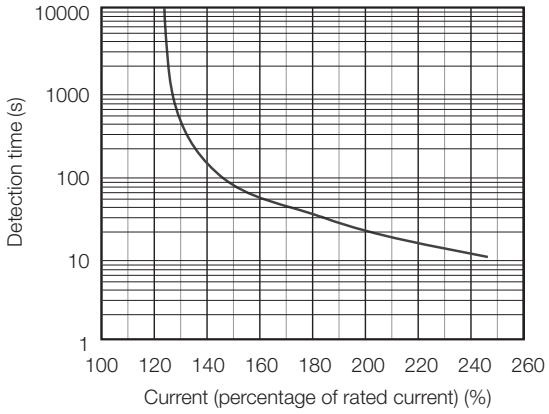

SGM7D-12L

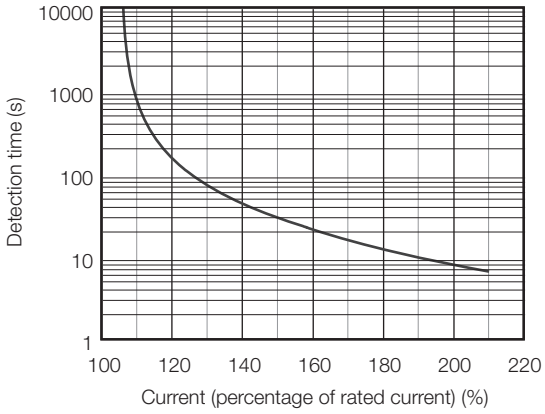

SGM7D-30L

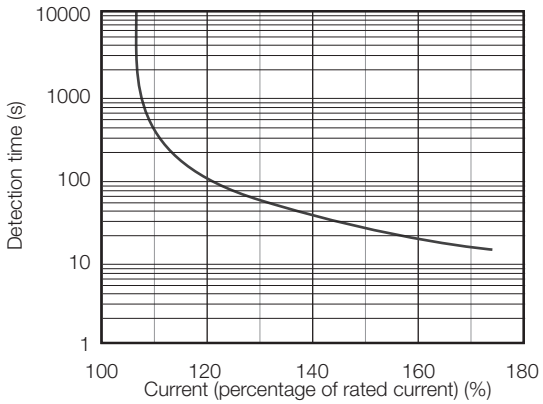

Note: The above overload protection characteristics do not mean that you can perform continuous duty operation with an output of 100% or higher.
Use the Servomotor so that the effective force remains within the continuous duty zone. Refer to the following section for details on the effective torque.

☞ **Torque-Motor Speed Characteristics (page 194)**

Allowable Load Moment of Inertia

The allowable load moments of inertia (motor moment of inertia ratios) for the Servomotors are given in the Ratings (pages 191 to 193). The values are determined by the regenerative energy processing capacity of the SERVOPACK and are also affected by the drive conditions of the Servomotor. Perform the required Steps for each of the following cases.

Use the SigmaSize+ AC Servo Drive Capacity Selection Program to check the driving conditions. Contact your Yaskawa representative for information on this program.

◆ Exceeding the Allowable Load Moment of Inertia

Use one of the following measures to adjust the load moment of inertia to within the allowable value.

- Reduce the torque limit.
- Reduce the deceleration rate.
- Reduce the maximum motor speed.

If the above steps is not possible, install an external regenerative resistor.

Information

An Overvoltage Alarm (A.400) is likely to occur during deceleration if the load moment of inertia exceeds the allowable load moment of inertia. SERVOPACKs with a built-in regenerative resistor may generate a Regenerative Overload Alarm (A.320). Refer to Built-In Regenerative Resistor (page 472) for the regenerative power (W) that can be processed by the SERVOPACKs.
Install an External Regenerative Resistor when the built-in regenerative resistor cannot process all of the regenerative power.

◆ When an External Regenerative Resistor Is Required

Install the External Regenerative Resistor. Refer to the following section for the recommended products.

☞ **External Regenerative Resistors (page 472)**

External Dimensions

◆ SGM7D-☐ ☐ F

• Servomotors with the Cable on the Side

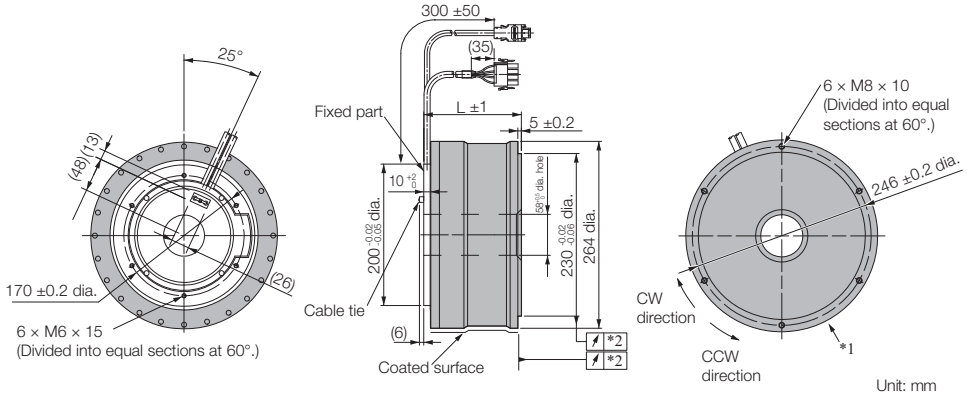

• Servomotors with the Cable on the Bottom

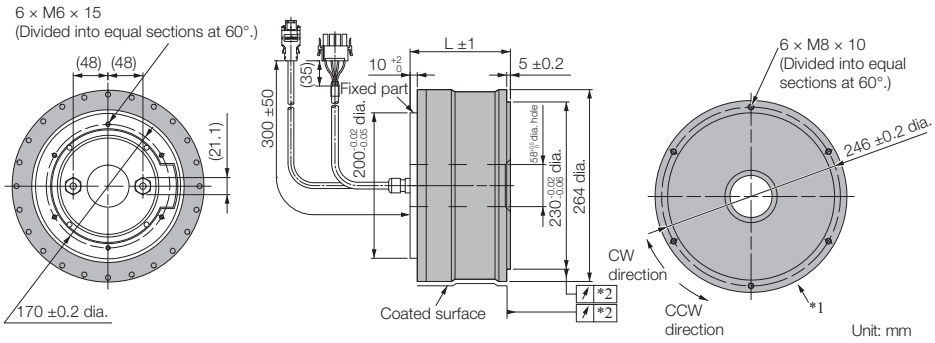

*1. The shaded section indicates the rotating parts.

*2. The precision depends on the option specification. Refer to the following section for details.

☞ **Specifications (page 188)**

Note: Values in parentheses are reference dimensions.

Model SGM7D-	L	Approx. Mass [kg]
30F☐ C☐ ☐	113 ±1	14.5
58F☐ C☐ ☐	138 ±1	19
90F☐ C☐ ☐	163 ±1	24
1AF☐ C☐ ☐	188 ±1	29

■ Connector Specifications

• Servomotor Connector

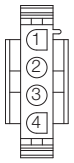

1	Phase U	Red
2	Phase V	Gray
3	Phase W	Blue
4	FG (frame ground)	Green (yellow)

Models
- Plug: 350779-1
- Pins: 350218-3 or 350547-3 (No.1 to 3)
- Ground pin: 350654-1 or 350669-1 (No. 4)

Manufacturer: Tyco Electronics Japan G.K.

Mating Connector
- Cap: 350780-1
- Socket: 350536-3 or 350550-3

• Encoder Connector

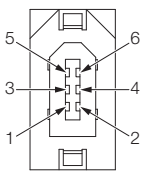

1	PG5V
2	PG0V
3*	BAT
4*	BAT0
5	PS
6	/PS
Connector case	FG (frame ground)

* Only absolute-value models with multiturn data.

Model: 55102-0600

Manufacturer: Molex Japan LLC

Mating connector: 54280-0609

◆ SGM7D-01G

• Servomotors with the Cable on the Side

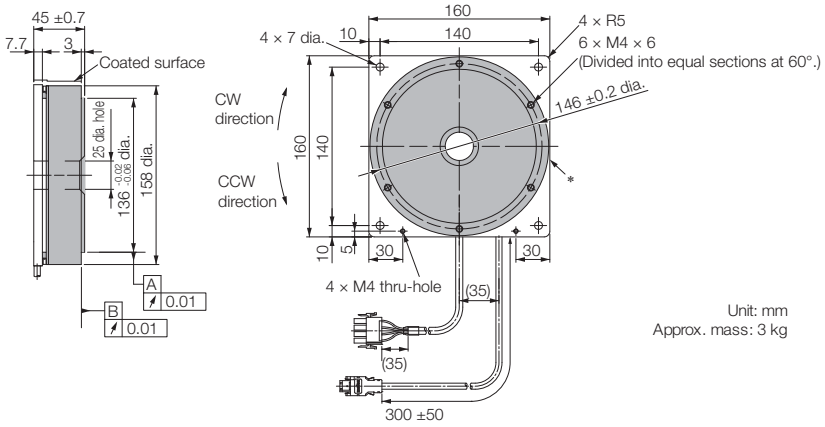

Unit: mm
Approx. mass: 3 kg

* The shaded section indicates the rotating parts.
Note: Values in parentheses are reference dimensions.

◆ SGM7D-05G

• Servomotors with the Cable on the Side

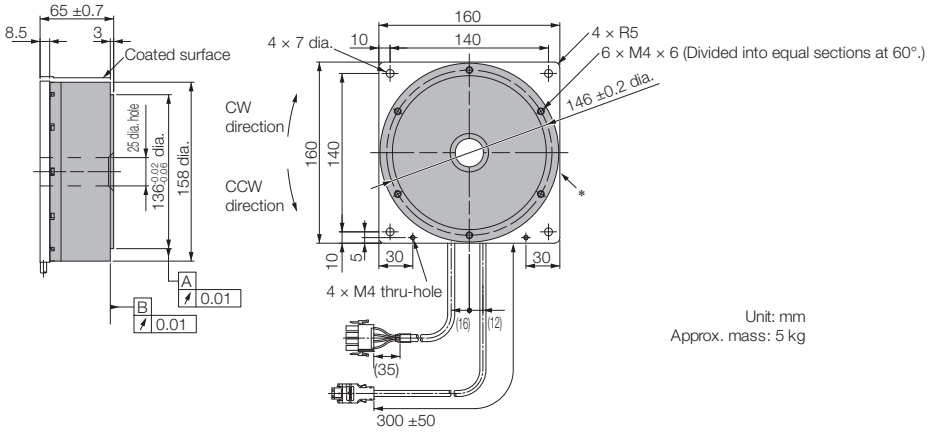

Unit: mm
Approx. mass: 5 kg

* The shaded section indicates the rotating parts.
Note: Values in parentheses are reference dimensions.

■ Connector Specifications

• Servomotor Connector

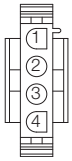

1	Phase U	Red
2	Phase V	Gray
3	Phase W	Blue
4	FG (frame ground)	Green

Models
- Plug: 350779-1
- Pins: 350561-3 or 350690-3 (No.1 to 3)
- Ground pin: 350654-1 or 350669-1 (No. 4)

Manufacturer: Tyco Electronics Japan G.K.

Mating Connector
- Cap: 350780-1
- Socket: 350570-3 or 350689-3

• Encoder Connector

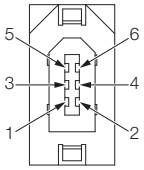

1	PG5V
2	PG0V
3*	BAT
4*	BAT0
5	PS
6	/PS
Connector case	FG (frame ground)

* Only absolute-value models with multiturn data.

Model: 55102-0600
Manufacturer: Molex Japan LLC
Mating connector: 54280-0609

◆ SGM7D-08G, -18G. -24G, -34G, and -45G

• Servomotors with the Cable on the Bottom

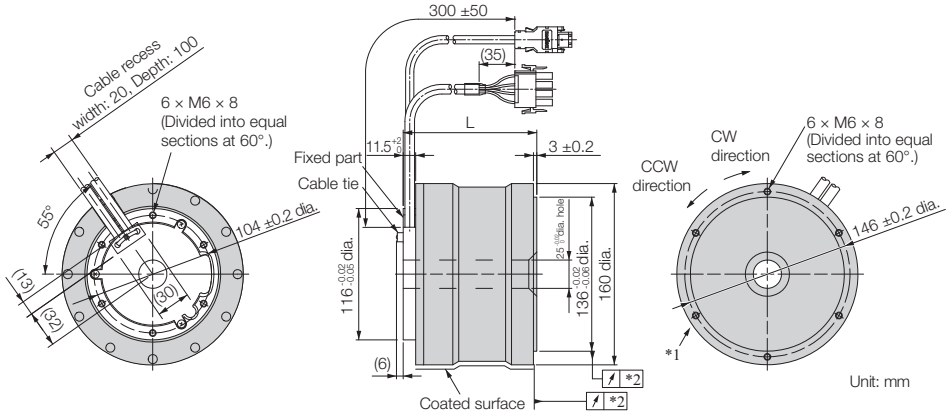

• Servomotors with the Cable on the Bottom

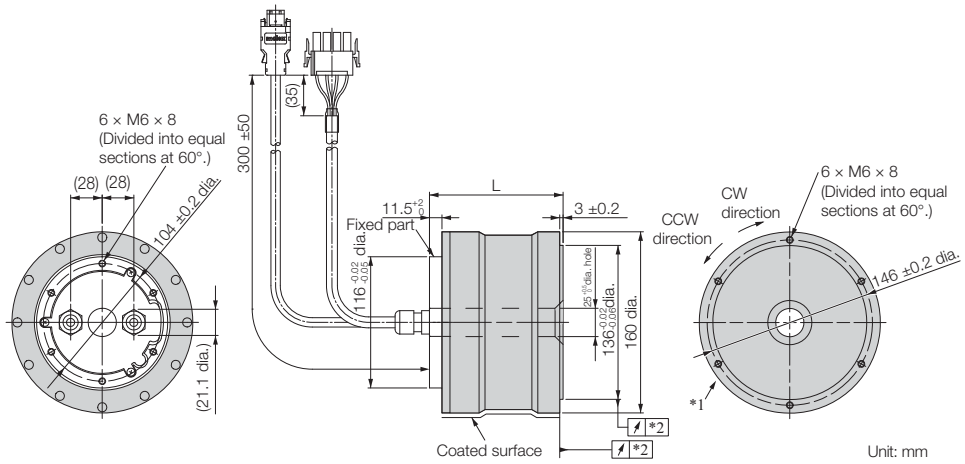

*1. The shaded section indicates the rotating parts.

*2. The precision depends on the option specification. Refer to the following section for details.

☞ **Specifications (page 188)**

Note: Values in parentheses are reference dimensions.

Model SGM7D-	L	Approx. Mass [kg]
08G☐ C☐ ☐	92.5 ±1	5.5
18G☐ C☐ ☐	118 ±1	7.5
24G☐ C☐ ☐	143 ±1	9.5
34G☐ C☐ ☐	168 ±1	12
45G☐ C☐ ☐	194 ±1	14

■ Connector Specifications

• Servomotor Connector

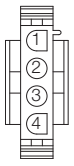

1	Phase U	Red
2	Phase V	Gray
3	Phase W	Blue
4	FG (frame ground)	Green (yellow)

Models
- Plug: 350779-1
- Pins: 350218-3 or 350547-3 (No.1 to 3)
- Ground pin: 350654-1 or 350669-1 (No. 4)

Manufacturer: Tyco Electronics Japan G.K.

Mating Connector
- Cap: 350780-1
- Socket: 350536-3 or 350550-3

• Encoder Connector

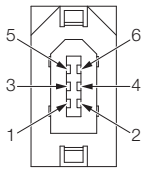

1	PG5V
2	PG0V
3*	BAT
4*	BAT0
5	PS
6	/PS
Connector case	FG (frame ground)

* Only absolute-value models with multiturn data.

Model: 55102-0600
Manufacturer: Molex Japan LLC
Mating connector: 54280-0609

◆ SGM7D-03H

• Servomotors with the Cable on the Side

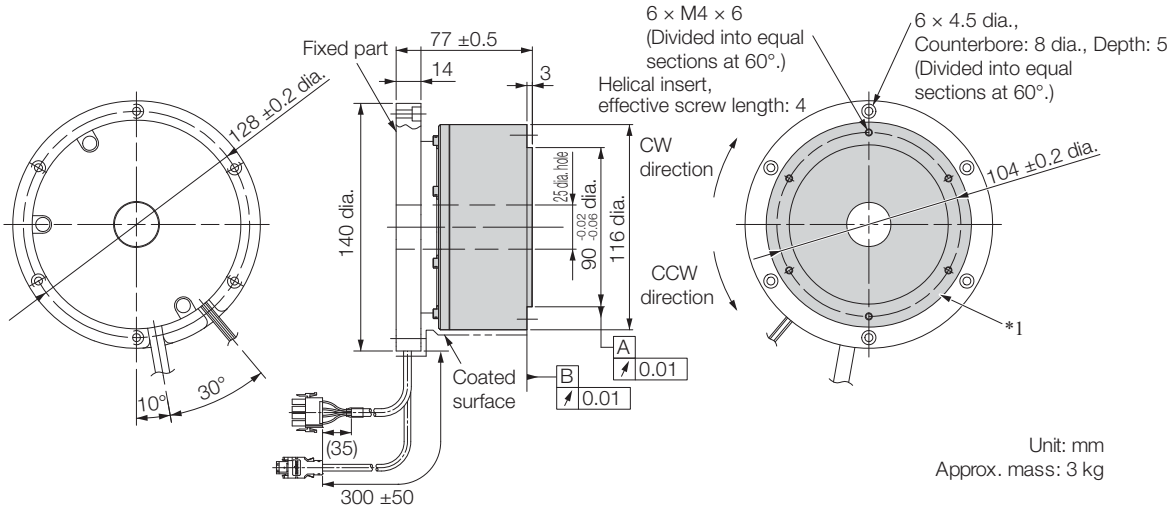

Unit: mm
Approx. mass: 3 kg

* The shaded section indicates the rotating parts.

Note: Values in parentheses are reference dimensions.

■ Connector Specifications

• Servomotor Connector

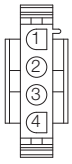

1	Phase U	Red
2	Phase V	Gray
3	Phase W	Blue
4	FG (frame ground)	Green

Models
- Plug: 350779-1
- Pins: 350561-3 or 350690-3 (No.1 to 3)
- Ground pin: 350654-1 or 350669-1 (No. 4)

Manufacturer: Tyco Electronics Japan G.K.

Mating Connector
- Cap: 350780-1
- Socket: 350570-3 or 350689-3

• Encoder Connector

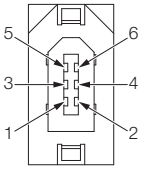

1	PG5V
2	PG0V
3*	BAT
4*	BAT0
5	PS
6	/PS
Connector case	FG (frame ground)

* Only absolute-value models with multiturn data.

Model: 55102-0600

Manufacturer: Molex Japan LLC

Mating connector: 54280-0609

◆ SGM7D-☐ ☐ I

• Servomotors with the Cable on the Bottom

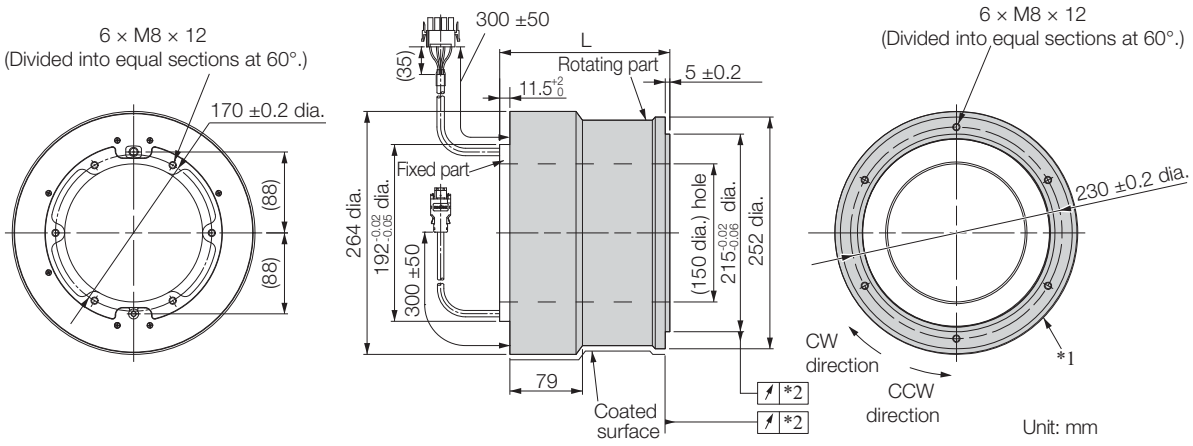

*1. The shaded section indicates the rotating parts.

*2. The precision depends on the option specification. Refer to the following section for details.

☞ **Specifications (page 188)**

Note: Values in parentheses are reference dimensions.

Model SGM7D-	L	Approx. Mass [kg]
28I☐ C5☐	158 ±1	23
70I☐ C5☐	185 ±1	28
1ZI☐ C5☐	212 ±1	33
1CI☐ C5☐	250 ±1	45
2BI☐ C5☐	304 ±1	55
2DI☐ C5☐	358 ±1	65

■ Connector Specifications

• Servomotor Connector

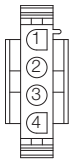

1	Phase U	Red
2	Phase V	Gray
3	Phase W	Blue
4	FG (frame ground)	Green (yellow)

Models
- Plug: 350779-1
- Pins: 350218-3 or 350547-3 (No.1 to 3)
- Ground pin: 350654-1 or 350669-1 (No. 4)

Manufacturer: Tyco Electronics Japan G.K.

Mating Connector
- Cap: 350780-1
- Socket: 350536-3 or 350550-3

• Encoder Connector

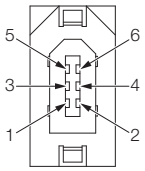

1	PG5V
2	PG0V
3*	BAT
4*	BAT0
5	PS
6	/PS
Connector case	FG (frame ground)

* Only absolute-value models with multiturn data.
Model: 55102-0600
Manufacturer: Molex Japan LLC
Mating connector: 54280-0609

◆ SGM7D-06J

• Servomotors with the Cable on the Bottom

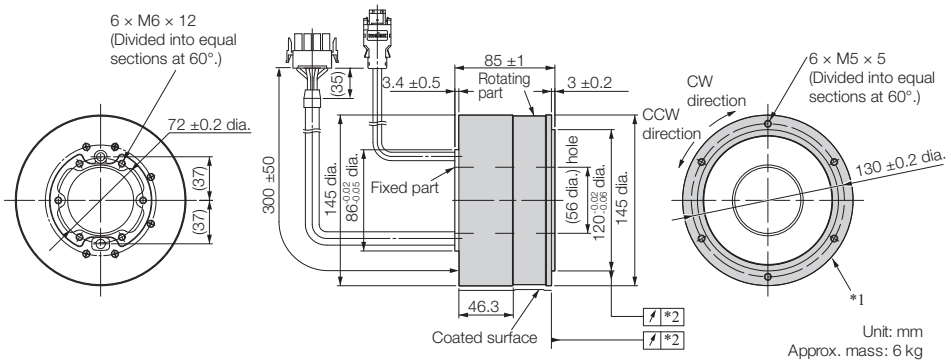

*1. The shaded section indicates the rotating parts.

*2. The precision depends on the option specification. Refer to the following section for details.

☞ **Specifications (page 188)**

Note: Values in parentheses are reference dimensions.

◆ SGM7D-09J, -18J, -20J, and -38J

• Servomotors with the Cable on the Bottom

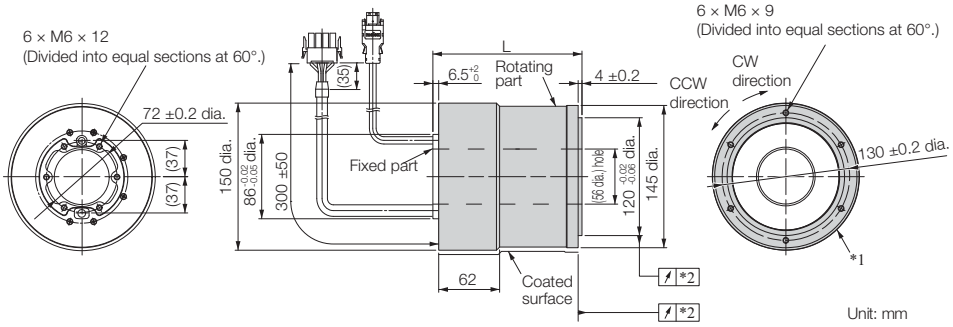

*1. The shaded section indicates the rotating parts.

*2. The precision depends on the option specification. Refer to the following section for details.

☞ **Specifications (page 188)**

Note: Values in parentheses are reference dimensions.

Model SGM7D-	L	Approx. Mass [kg]
09J☐ C5☐	123 ±1	8.0
18J☐ C5☐	151 ±1	11.0
20J☐ C5☐	179 ±1	13.0
38J☐ C5☐	207 ±1	15.5

■ Connector Specifications

• Servomotor Connector

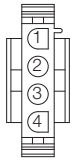

1	Phase U	Red
2	Phase V	Gray
3	Phase W	Blue
4	FG (frame ground)	Green (yellow)

Models
- Plug: 350779-1
- Pins: 350218-3 or 350547-3 (No.1 to 3)
- Ground pin: 350654-1 or 350669-1 (No. 4)

Manufacturer: Tyco Electronics Japan G.K.

Mating Connector
- Cap: 350780-1
- Socket: 350536-3 or 350550-3

• Encoder Connector

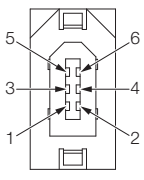

1	PG5V
2	PG0V
3*	BAT
4*	BAT0
5	PS
6	/PS
Connector case	FG (frame ground)

* Only absolute-value models with multiturn data.

Model: 55102-0600
Manufacturer: Molex Japan LLC
Mating connector: 54280-0609

◆ SGM7D-☐ ☐ K

• Servomotors with the Cable on the Bottom

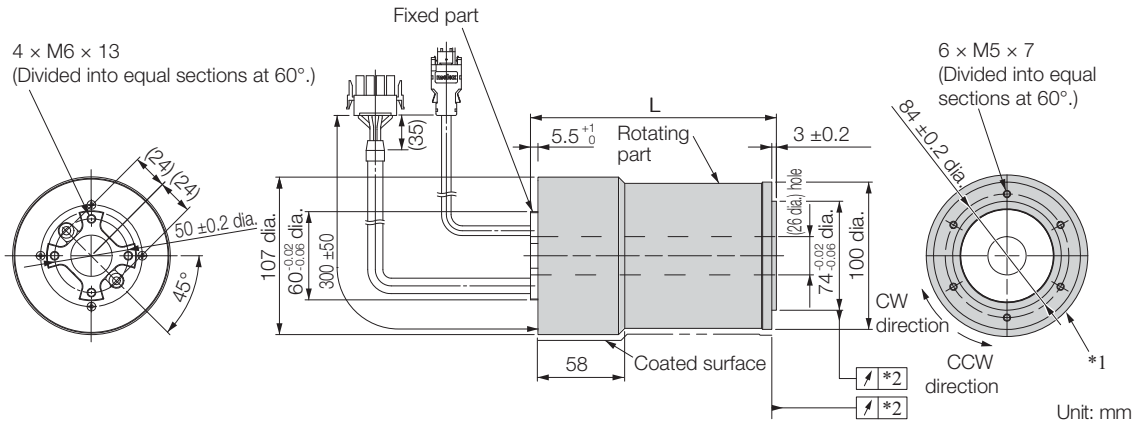

*1. The shaded section indicates the rotating parts.

*2. The precision depends on the option specification. Refer to the following section for details.

☞ **Specifications (page 188)**

Note: Values in parentheses are reference dimensions.

Model SGM7D-	L	Approx. Mass [kg]
02K☐ C5☐	113 ±1	4.0
06K☐ C5☐	140 ±1	5.0
08K☐ C5☐	167 ±1	6.5

■ Connector Specifications

• Servomotor Connector

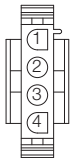

1	Phase U	Red
2	Phase V	Gray
3	Phase W	Blue
4	FG (frame ground)	Green

Models
- Plug: 350779-1
- Pins: 350561-3 or 350690-3 (No.1 to 3)
- Ground pin: 350654-1 or 350669-1 (No. 4)

Manufacturer: Tyco Electronics Japan G.K.

Mating Connector
- Cap: 350780-1
- Socket: 350570-3 or 350689-3

• Encoder Connector

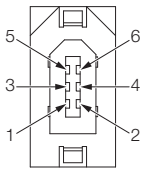

1	PG5V
2	PG0V
3*	BAT
4*	BAT0
5	PS
6	/PS
Connector case	FG (frame ground)

* Only absolute-value models with multiturn data.

Model: 55102-0600

Manufacturer: Molex Japan LLC

Mating connector: 54280-0609

◆ SGM7D-06L and -12L

• Servomotors with the Cable on the Side

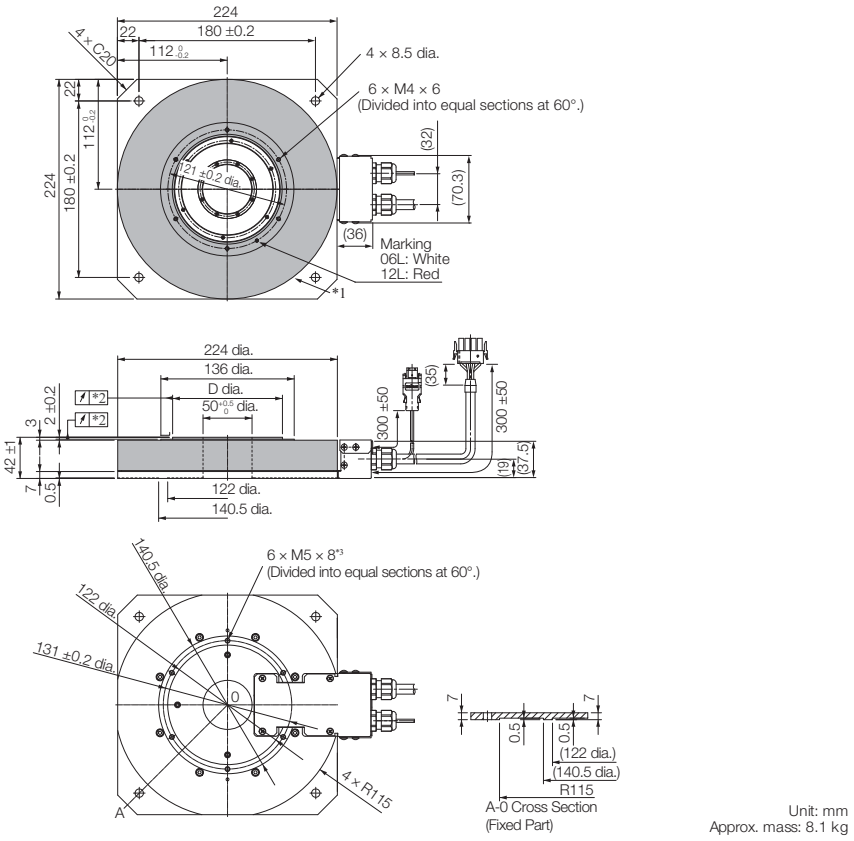

Unit: mm
Approx. mass: 8.1 kg

*1. The shaded section indicates the rotating parts.

*2. The precision depends on the option specification. Refer to the following section for details.
☞ **Specifications (page 188)**

*3. In the following cases, rigidity is required in the Servomotor. Therefore, secure the Servomotor with these holes.
- There is a fluctuating vertical load on the Servomotor.
- There is a moment load on the Servomotor.
- The Servomotor is used hanging upside down.

Note: Values in parentheses are reference dimensions.

Model SGM7D-	D
☐ ☐ L☐ C41 (Standard mechanical precision)	$112^{-0.02}_{-0.06}$
☐ ☐ L☐ C42 (High mechanical precision)	$111.9^{-0.02}_{-0.06}$

■ Connector Specifications

• Servomotor Connector

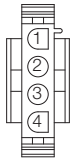

1	Phase U	Red
2	Phase V	Gray
3	Phase W	Blue
4	FG (frame ground)	Green (yellow)

Models
- Plug: 350779-1
- Pins: 350218-3 or 350547-3 (No.1 to 3)
- Ground pin: 350654-1 or 350669-1 (No. 4)

Manufacturer: Tyco Electronics Japan G.K.

Mating Connector
- Cap: 350780-1
- Socket: 350536-3 or 350550-3

• Encoder Connector

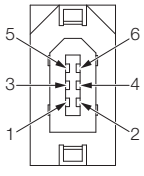

1	PG5V
2	PG0V
3*	BAT
4*	BAT0
5	PS
6	/PS
Connector case	FG (frame ground)

* Only absolute-value models with multiturn data.
Model: 55102-0600
Manufacturer: Molex Japan LLC
Mating connector: 54280-0609

◆ SGM7D-30L

• Servomotors with the Cable on the Side

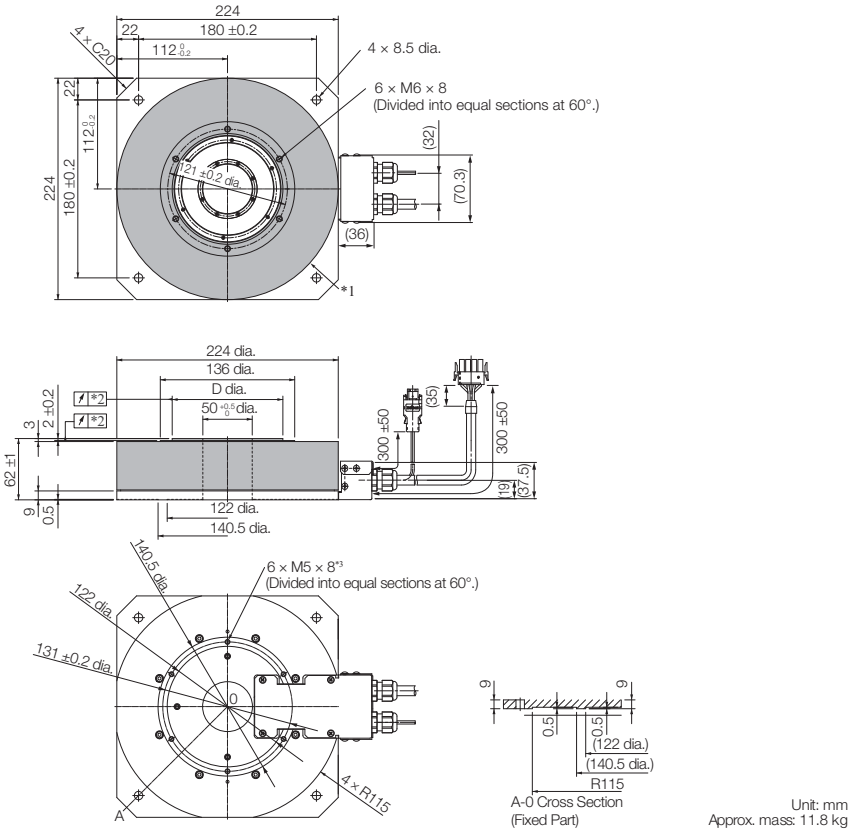

*1. The shaded section indicates the rotating parts.

*2. The precision depends on the option specification. Refer to the following section for details.

☞ **Specifications (page 188)**

*3. In the following cases, rigidity is required in the Servomotor. Therefore, secure the Servomotor with these holes.

- There is a fluctuating vertical load on the Servomotor.
- There is a moment load on the Servomotor.
- The Servomotor is used hanging upside down.

Note: Values in parentheses are reference dimensions.

Model SGM7D-	D
30L□ C41 (Standard mechanical precision)	$112^{-0.02}_{-0.06}$
30L□ C42 (High mechanical precision)	$111.9^{-0.02}_{-0.06}$

■ Connector Specifications

• Servomotor Connector

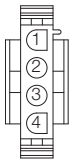

1	Phase U	Red
2	Phase V	Gray
3	Phase W	Blue
4	FG (frame ground)	Green (yellow)

Models
- Plug: 350779-1
- Pins: 350218-3 or 350547-3 (No.1 to 3)
- Ground pin: 350654-1 or 350669-1 (No. 4)

Manufacturer: Tyco Electronics Japan G.K.

Mating Connector
- Cap: 350780-1
- Socket: 350536-3 or 350550-3

• Encoder Connector

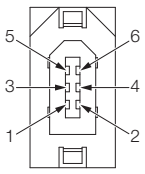

1	PG5V
2	PG0V
3*	BAT
4*	BAT0
5	PS
6	/PS
Connector case	FG (frame ground)

* Only absolute-value models with multiturn data.
Model: 55102-0600
Manufacturer: Molex Japan LLC
Mating connector: 54280-0609

Selecting Cables

◆ Cable Configurations

The cables shown below are required to connect a Servomotor to a SERVOPACK.

Encoder Cable of 20 m or Less

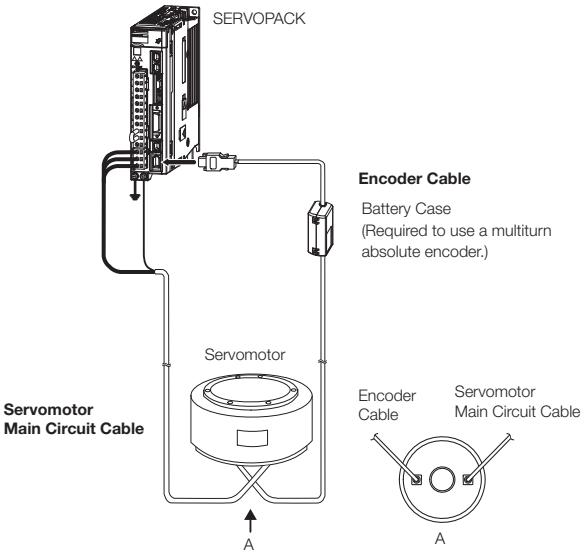

Encoder Cable of 30 m to 50 m (Relay Cable)

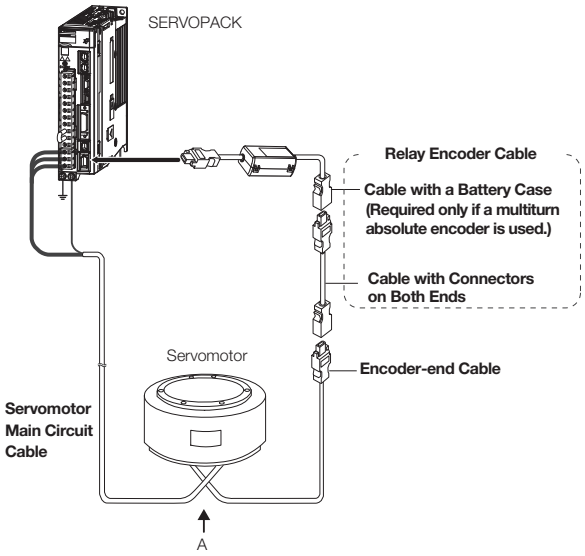

Note: 1. If the Encoder Cable length exceeds 20 m, be sure to use a Relay Encoder Cable.

2. If you use a Servomotor Main Circuit Cable that exceeds 20 m, the intermittent duty zone in the torque-motor speed characteristics will become smaller because the voltage drop increases.

3. Refer to the following manual for the following information.
   - Cable dimensional drawings and cable connection specifications
   - Order numbers and specifications of individual connectors for cables
   - Order numbers and specifications for wiring materials

   📖 **Σ-7-Series AC Servo Drive Peripheral Device Selection Manual (Manual No.: SIEP S800001 32)**

◆ Servomotor Main Circuit Cables

Servomotor Model	Length (L)	Order Number		Appearance
		Standard Cable	Flexible Cable*	
SGM7D-□ □ F SGM7D-08G to -45G SGM7D-□ □ I SGM7D-□ □ J SGM7D-□ □ L	3 m	JZSP-CMM00-03-E	JZSP-C7DM21-03-E	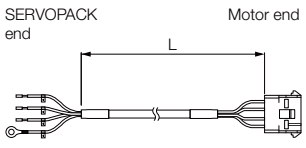
	5 m	JZSP-CMM00-05-E	JZSP-C7DM21-05-E	
	10 m	JZSP-CMM00-10-E	JZSP-C7DM21-10-E	
	15 m	JZSP-CMM00-15-E	JZSP-C7DM21-15-E	
	20 m	JZSP-CMM00-20-E	JZSP-C7DM21-20-E	
SGM7D-01G or -05G SGM7D-□ □ H SGM7D-□ □ K	3 m	JZSP-CMM00-03-E	JZSP-CMM01-03-E	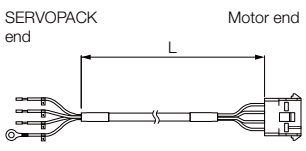
	5 m	JZSP-CMM00-05-E	JZSP-CMM01-05-E	
	10 m	JZSP-CMM00-10-E	JZSP-CMM01-10-E	
	15 m	JZSP-CMM00-15-E	JZSP-CMM01-15-E	
	20 m	JZSP-CMM00-20-E	JZSP-CMM01-20-E	

* Use Flexible Cables for moving parts of machines, such as robots. The recommended bending radius (R) is 90 mm or larger.

Note: Direct Drive Servomotors are not available with holding brakes.

◆ Encoder Cables of 20 m or Less

Servomotor Model	Name	Length (L)	Order Number		Appearance
			Standard Cable	Flexible Cable*1	
All SGM7D models	For incremental encoder: Without Battery Case	3 m	JZSP-CMP00-03-E	JZSP-CMP10-03-E	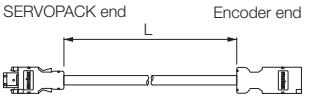
		5 m	JZSP-CMP00-05-E	JZSP-CMP10-05-E	
		10 m	JZSP-CMP00-10-E	JZSP-CMP10-10-E	
		15 m	JZSP-CMP00-15-E	JZSP-CMP10-15-E	
		20 m	JZSP-CMP00-20-E	JZSP-CMP10-20-E	
	For multiturn absolute encoder: Without Battery Case*2	3 m	JZSP-CMP00-03-E	JZSP-CMP10-03-E	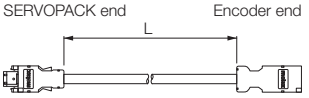
		5 m	JZSP-CMP00-05-E	JZSP-CMP10-05-E	
		10 m	JZSP-CMP00-10-E	JZSP-CMP10-10-E	
		15 m	JZSP-CMP00-15-E	JZSP-CMP10-15-E	
		20 m	JZSP-CMP00-20-E	JZSP-CMP10-20-E	
	For multiturn absolute encoder: With Battery Case	3 m	JZSP-CSP19-03-E	JZSP-CSP29-03-E	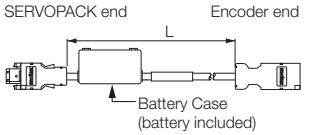
		5 m	JZSP-CSP19-05-E	JZSP-CSP29-05-E	
		10 m	JZSP-CSP19-10-E	JZSP-CSP29-10-E	
		15 m	JZSP-CSP19-15-E	JZSP-CSP29-15-E	
		20 m	JZSP-CSP19-20-E	JZSP-CSP29-20-E	

*1. Use Flexible Cables for moving parts of machines, such as robots. The recommended bending radius (R) is 68 mm or larger.
*2. Use one of these Cables if a battery is connected to the host controller.

◆ Relay Encoder Cables of 30 m to 50 m

Servomotor Model	Name	Length (L)	Order Number*1	Appearance
All SGM7D models	Cables with Connectors on Both Ends (for incremental or multiturn absolute encoder)	30 m	JZSP-UCMP00-30-E	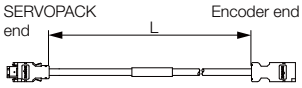
		40 m	JZSP-UCMP00-40-E	
		50 m	JZSP-UCMP00-50-E	
	Cable with a Battery Case (for multiturn absolute encoder)*2	0.3 m	JZSP-CSP12-E	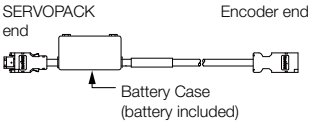

*1. Flexible Cables are not available.
*2. This Cable is not required if a battery is connected to the host controller.

SGMCS (Small Capacity, Coreless or Medium Capacity, with Core)

Model Designations

SGMCS - 02 B 3 C 1 1

Direct Drive Servo Motors: SGMCS	1st+2nd digits	3rd digit	4th digit	5th digit	6th digit	7th digit

1st+2nd digits Rated Output

● Small-Capacity, Coreless

Code	Specification
02	2 N·m
04	4 N·m
05	5 N·m
07	7 N·m
08	8 N·m
10	10 N·m
14	14 N·m
16	16 N·m
17	17 N·m
25	25 N·m
35	35 N·m

● Medium-Capacity, with Core

Code	Specification
45	45 N·m
80	80 N·m
1A	110 N·m
1E	150 N·m
2Z	200 N·m

3rd digit Servo Motor Outer Diameter

Code	Specification
B	135-mm dia.
C	175-mm dia.
D	230-mm dia.
E	290-mm dia.
M	280-mm dia.
N	360-mm dia.

4th digit Serial Encoder

Code	Specification
3	20-bit single-turn absolute encoder
D	20-bit incremental encoder

5th digit Design Revision Order

Code	Specification
A	Model with servo Motor outer diameter code M or N
B	Model with servo Motor outer diameter code E
C	Model with servo Motor outer diameter code B, C, or D

6th digit Flange

Code	Mounting	Servo Motor Outer Diameter Code (3rd Digit)					
		B	C	D	E	M	N
1	Non-load side	✓	✓	✓	✓	–	–
	Load side	–	–	–	–	✓	✓
3	Non-load side	–	–	–	–	✓	✓
4	Non-load side (with cable on side)	✓	✓	✓	✓	–	–

✓ : Applicable models. ■ Non Stock Items

7th digit Options

Code	Specification
1	Without options

Note: Direct Drive Servo Motors are not available with holding brakes.

Specifications and Ratings

Small-Capacity, Coreless Servo Motors: Specifications

Voltage			200 V									
Model SGMCS-			02B	05B	07B	04C	10C	14C	08D	17D	25D	16E	35E
Time Rating			Continuous									
Thermal Class			A									
Insulation Resistance			500 VDC, 10 MΩ min.									
Withstand Voltage			1,500 VAC for 1 minute									
Excitation			Permanent magnet									
Mounting			Flange-mounted									
Drive Method			Direct drive									
Rotation Direction			Counterclockwise (CCW) for forward reference when viewed from the load side									
Vibration Class*1			V15									
Absolute Accuracy			±15 s									
Repeatability			±1.3 s									
Protective Structure*2			Totally enclosed, self-cooled, IP42									
Environmental Conditions	Surrounding Air Temperature		0°C to 40°C (with no freezing)									
	Surrounding Air Humidity		20% to 80% relative humidity (with no condensation)									
	Installation Site		• Must be indoors and free of corrosive and explosive gases. • Must be well-ventilated and free of dust and moisture. • Must facilitate inspection and cleaning. • Must have an altitude of 1,000 m or less. • Must be free of strong magnetic fields.									
	Storage Environment		Store the Servo Motor in the following environment if you store it with the power cable disconnected. Storage Temperature: -20°C to 60°C (with no freezing) Storage Humidity: 20% to 80% relative humidity (with no condensation)									
Mechanical Tolerances*3	Runout of Output Shaft Surface	mm	0.02									
	Runout at End of Output Shaft	mm	0.04									
	Parallelism between Mounting Surface and Output Shaft Surface	mm	0.07						0.08			
	Concentricity between Output Shaft and Flange Outer Diameter	mm	0.07						0.08			
Shock Resistance*4	Impact Acceleration Rate at Flange		490 m/s^2									
	Number of Impacts		2 times									
Vibration Resistance*5	Vibration Acceleration Rate at Flange		49 m/s^2									
Applicable SERVOPACKs	SGD7S-		2R8A									5R5A
	SGD7W-											

*1. A vibration class of V15 indicates a vibration amplitude of 15 μm maximum on the Servo Motor without a load at the rated motor speed.
*2. The hollow hole section, motor mounting surface, output shaft surface, and gap around the rotating part of the shaft are excluded. Protective structure specifications apply only when the special cable is used.

*3. Refer to the following figure for the relevant locations on the Servo Motor. Refer to the dimensional drawings of the individual Servo Motors for more information on tolerances.

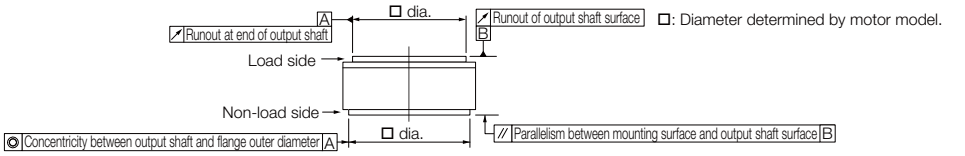

*4. The shock resistance for shock in the vertical direction when the Servo Motor is mounted with the shaft in a horizontal position is given in the above table.



Shock Applied to the Servo Motor

*5. The vertical, side-to-side, and front-to-back vibration resistance for vibration in three directions when the Servo Motor is mounted with the shaft in a horizontal position is given in the above table. The strength of the vibration that the Servo Motor can withstand depends on the application. Always confirm the vibration acceleration rate.

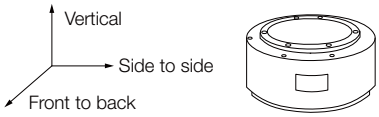

Small-Capacity, Coreless Servo Motors: Ratings

Voltage			200 V									
Model SGMCS-			02B	05B	07B	04C	10C	14C	08D	17D	25D	16E	35E
Rated Output*1		W	42	105	147	84	209	293	168	356	393	335	550
Rated Torque*1, *2		N•m	2.00	5.00	7.00	4.00	10.0	14.0	8.00	17.0	25.0	16.0	35.0
Instantaneous Maximum Torque*1		N•m	6.00	15.0	21.0	12.0	30.0	42.0	24.0	51.0	75.0	48.0	105
Stall Torque*1		N•m	2.05	5.15	7.32	4.09	10.1	14.2	8.23	17.4	25.4	16.5	35.6
Rated Current*1		Arms	1.8	1.7	1.4	2.2		2.8	1.9	2.5	2.6	3.3	3.5
Instantaneous Maximum Current*1		Arms	5.4	5.1	4.1	7.0		8.3	5.6	7.5	8.0	9.4	10.0
Rated Motor Speed*1		min^{-1}	200			200			200		150	200	150
Maximum Motor Speed*1		min^{-1}	500			500	400	300	500	350	250	500	250
Torque Constant		N•m/Arms	1.18	3.17	5.44	2.04	5.05	5.39	5.10	7.79	10.8	5.58	11.1
Motor Moment of Inertia		$\times 10^{-4}$ kg•m^2	28.0	51.0	77.0	77.0	140	220	285	510	750	930	1430
Rated Power Rate*1		kW/s	1.43	4.90	6.36	2.08	7.14	8.91	2.25	5.67	8.33	2.75	8.57
Rated Angular Acceleration Rate*1		rad/s^2	710	980	910	520	710	640	280	330		170	240
Heat Sink Size		mm	350 × 350 × 12			450 × 450 × 12			550 × 550 × 12			650 × 650 × 12	
Allowable Load*3	Allowable Thrust Load	N	1500			3300			4000			11000	
	Allowable Moment Load	N•m	40	50	64	70	75	90	93	103	135	250	320

*1. These values are for operation in combination with a SERVOPACK when the temperature of the armature winding is 100°C. The values for other items are at 20°C. These are typical values.

*2. The rated torques are the continuous allowable torque values at a surrounding air temperature of 40°C with a steel heat sink of the dimensions given in the table.

*3. The thrust loads and moment loads that are applied while a Servo Motor is operating are roughly classified into the following patterns. Design the machine so that the thrust loads or moment loads will not exceed the values given in the table.

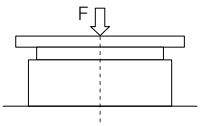

Where F is the external force,
Thrust load = F + Load mass
Moment load = 0

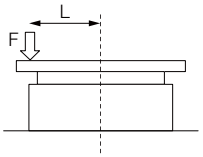

Where F is the external force,
Thrust load = F + Load mass
Moment load = F × L

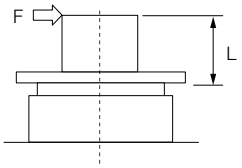

Where F is the external force
Thrust load = Load mass
Moment load = F × L

Note: For the bearings used in these Servo Motors, the loss depends on the bearing temperature. The amount of heat loss is higher at low temperatures.

Small-Capacity, Coreless Servo Motors: Torque-Motor Speed Characteristics

A : Continuous duty zone ——— (solid lines): With three-phase 200-V input
B : Intermittent duty zone - - - - - - - - (dotted lines): With single-phase 100-V input

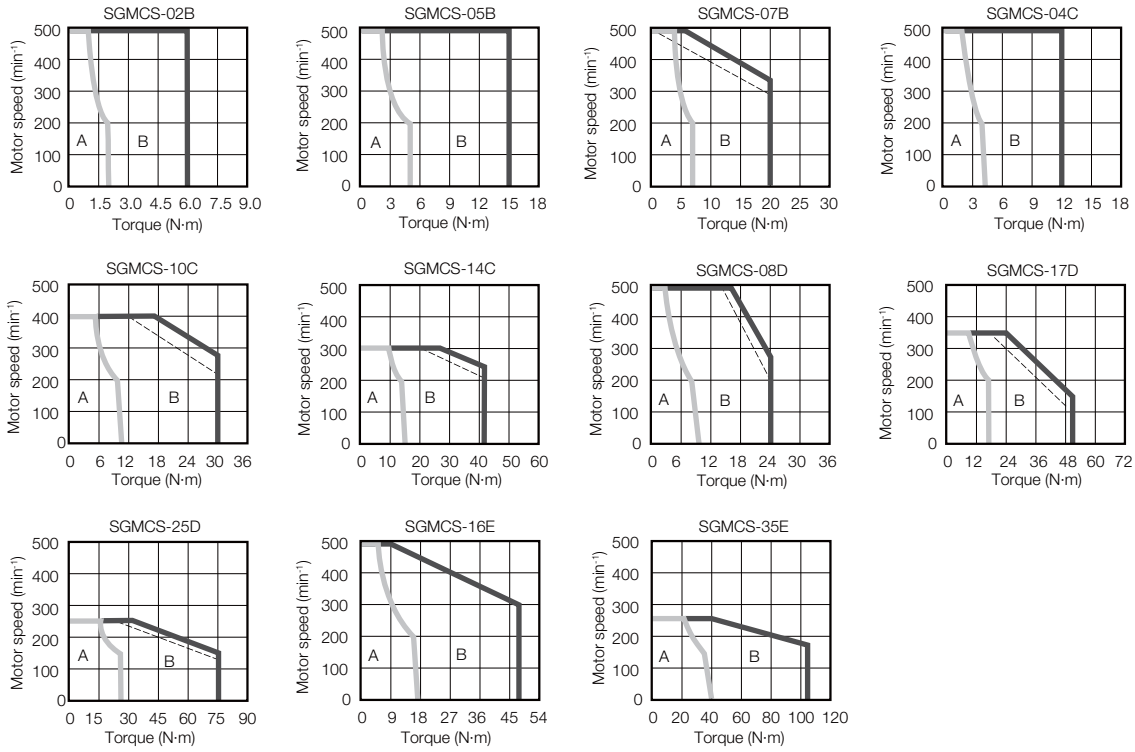

Note: 1. These values are for operation in combination with a SERVOPACK when the temperature of the armature winding is 100°C. These are typical values.

2. The characteristics in the intermittent duty zone depend on the power supply voltage.

3. If the effective torque is within the allowable range for the rated torque, the Servo Motor can be used within the intermittent duty zone.

4. If you use a Servo Motor Main Circuit Cable that exceeds 20 m, the intermittent duty zone in the torque-motor speed characteristics will become smaller because the voltage drop increases.

Small-Capacity, Coreless Servo Motors: Servo Motor Overload Protection Characteristics

The overload detection level is set for hot start conditions with a Servo Motor surrounding air temperature of 40°C.

SGMCS-02B, -05B, -07B, -10C, -17D, and -35E

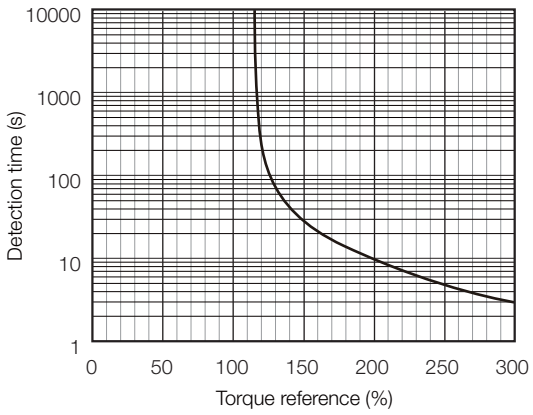

SGMCS-04C

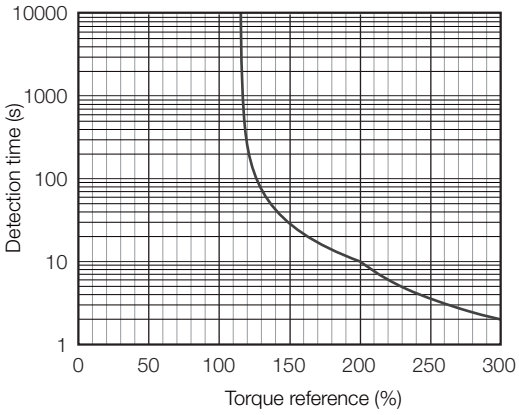

SGMCS-14C

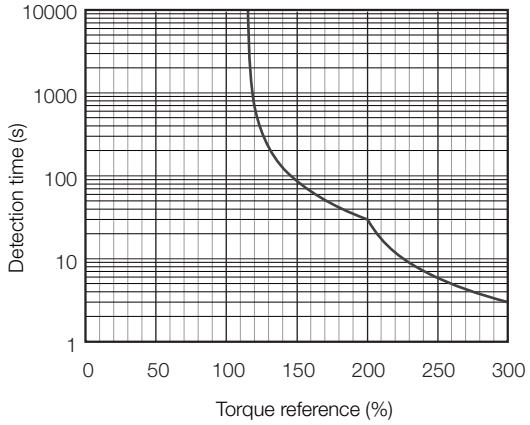

SGMCS-08D and -16E

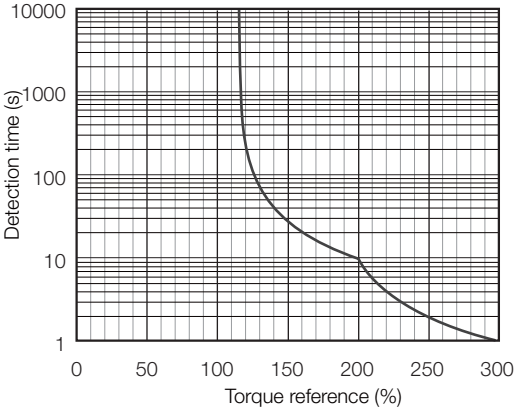

SGMCS-25D

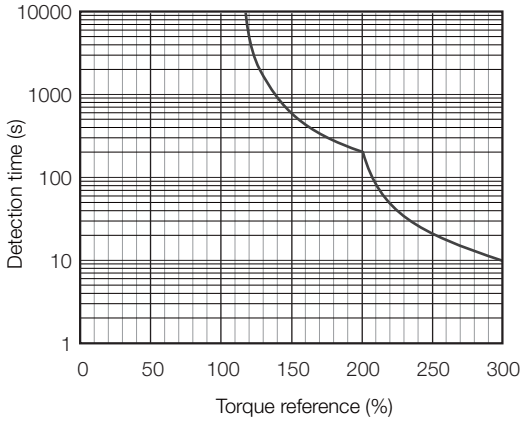

Note: The above overload protection characteristics do not mean that you can perform continuous duty operation with an output of 100% or higher. Use the Servo Motor so that the effective torque remains within the continuous duty zone given in *Small-Capacity, Coreless Servo Motors: Torque-Motor Speed Characteristics* on page 218.

Medium-Capacity Servo Motors with Cores: Specifications

Voltage				200 V					
Model SGMCS-				45M	80M	1AM	80N	1EN	2ZN
Time Rating				Continuous					
Thermal Class				F					
Insulation Resistance				500 VDC, 10 MΩ min.					
Withstand Voltage				1,500 VAC for 1 minute					
Excitation				Permanent magnet					
Mounting				Flange-mounted					
Drive Method				Direct drive					
Rotation Direction				Counterclockwise (CCW) for forward reference when viewed from the load side					
Vibration Class*1				V15					
Absolute Accuracy				±15 s					
Repeatability				±1.3 s					
Protective Structure*2				Totally enclosed, self-cooled, IP44					
Environmental Conditions	Surrounding Air Temperature			0°C to 40°C (with no freezing)					
	Surrounding Air Humidity			20% to 80% relative humidity (with no condensation)					
	Installation Site			• Must be indoors and free of corrosive and explosive gases. • Must be well-ventilated and free of dust and moisture. • Must facilitate inspection and cleaning. • Must have an altitude of 1,000 m or less. • Must be free of strong magnetic fields.					
	Storage Environment			Store the Servo Motor in the following environment if you store it with the power cable disconnected. Storage Temperature: -20°C to 60°C (with no freezing) Storage Humidity: 20% to 80% relative humidity (with no condensation)					
Mechanical Tolerances*3	Runout of Output Shaft Surface	mm		0.02					
	Runout at End of Output Shaft	mm		0.04					
	Parallelism between Mounting Surface and Output Shaft Surface	mm		–					
	Concentricity between Output Shaft and Flange Outer Diameter	mm		0.08					
	Perpendicularity between Mounting Surface and Output Shaft	mm		0.08					
Shock Resistance*4	Impact Acceleration Rate at Flange			490 m/s^2					
	Number of Impacts			2 times					
Vibration Resistance*5	Vibration Acceleration Rate at Flange			24.5 m/s^2					
Applicable SERVOPACKs			SGD7S-	7R6A	120A	180A	120A	200 A	
			SGD7W-	7R6A	–				

*1. A vibration class of V15 indicates a vibration amplitude of 15 μm maximum on the Servo Motor without a load at the rated motor speed.
*2. This does not apply to the shaft opening. Protective structure specifications apply only when the special cable is used.

*3. Refer to the following figure for the relevant locations on the Servo Motor. Refer to the dimensional drawings of the individual Servo Motors for more information on tolerances.

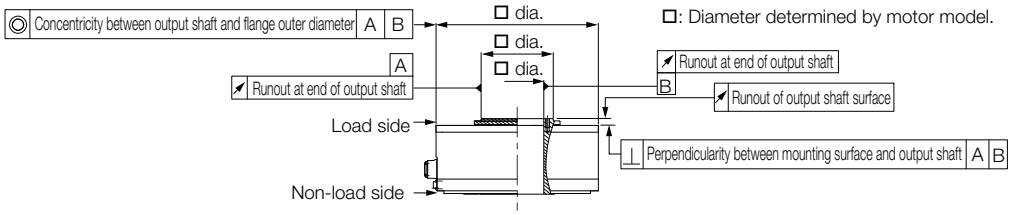

*4. The shock resistance for shock in the vertical direction when the Servo Motor is mounted with the shaft in a horizontal position is given in the above table.

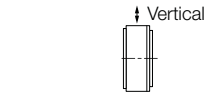

Shock Applied to the Servo Motor

*5. The vertical, side-to-side, and front-to-back vibration resistance for vibration in three directions when the Servo Motor is mounted with the shaft in a horizontal position is given in the above table. The strength of the vibration that the Servo Motor can withstand depends on the application. Always confirm the vibration acceleration rate.

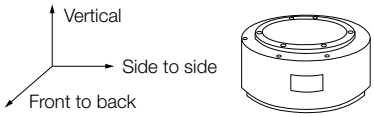

Medium-Capacity Servo Motors with Cores: Ratings

Voltage			200 V					
Model SGMCS-			45M	80M	1AM	80N	1EN	2ZN
Rated Output*1		W	707	1260	1730	1260	2360	3140
Rated Torque*1, *2		N•m	45.0	80.0	110	80.0	150	200
Instantaneous Maximum Torque*1		N•m	135	240	330	240	450	600
Stall Torque*1		N•m	45.0	80.0	110	80.0	150	200
Rated Current*1		Arms	5.8	9.7	13.4	9.4	17.4	18.9
Instantaneous Maximum Current*1		Arms	17.0	28.0	42.0	28.0	56.0	56.0
Rated Motor Speed*1		min^{-1}	150			150		
Maximum Motor Speed*1		min^{-1}	300			300	250	
Torque Constant		N·m/Arms	8.39	8.91	8.45	9.08	9.05	11.5
Motor Moment of Inertia		$\times 10^{-4}$ kg•m^2	388	627	865	1360	2470	3060
Rated Power Rate*1		kW/s	52.2	102	140	47.1	91.1	131
Rated Angular Acceleration Rate*1		rad/s^2	1160	1280	1270	588	607	654
Heat Sink Size		mm	750 × 750 × 45					
Allowable Load*3	A	mm	33			37.5		
	Allowable Thrust Load	N	9000			16000		
	Allowable Moment Load	N•m	180			350		

*1. These values are for operation in combination with a SERVOPACK when the temperature of the armature winding is 20°C. These are typical values.
*2. The rated torques are the continuous allowable torque values at a surrounding air temperature of 40°C with a steel heat sink of the dimensions given in the table.
*3. The thrust loads and moment loads that are applied while a Servo Motor is operating are roughly classified into the following patterns. Design the machine so that the thrust loads or moment loads will not exceed the values given in the table.

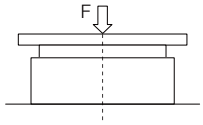

Where F is the external force,
Thrust load = F + Load mass
Moment load = 0

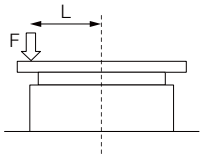

Where F is the external force,
Thrust load = F + Load mass
Moment load = F × L

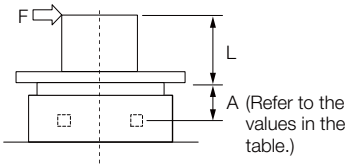

Where F is the external force,
Thrust load = Load mass
Moment load = F × (L + A)

Note: For the bearings used in these Servo Motors, the loss depends on the bearing temperature. The amount of heat loss is higher at low temperatures.

Medium-Capacity Servo Motors with Cores: Torque-Motor Speed Characteristics

A : Continuous duty zone
B : Intermittent duty zone

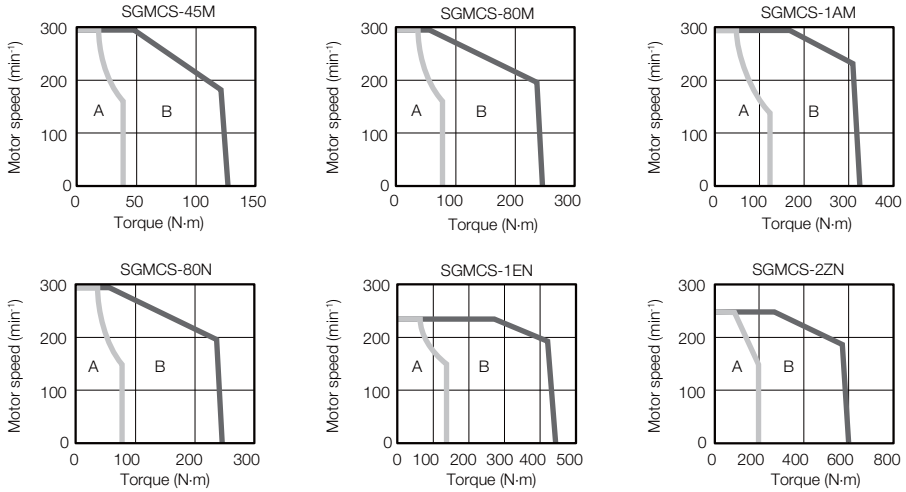

Note: 1. These values are for operation in combination with a SERVOPACK when the temperature of the armature winding is 20°C. These are typical values.
2. If the effective torque is within the allowable range for the rated torque, the Servo Motor can be used within the intermittent duty zone.
3. If you use a Servo Motor Main Circuit Cable that exceeds 20 m, the intermittent duty zone in the torque-motor speed characteristics will become smaller because the voltage drop increases.

Medium-Capacity Servo Motors with Cores: Servo Motor Overload Protection Characteristics

The overload detection level is set for hot start conditions with a Servo Motor surrounding air temperature of 40°C.

SGMCS-45M□A

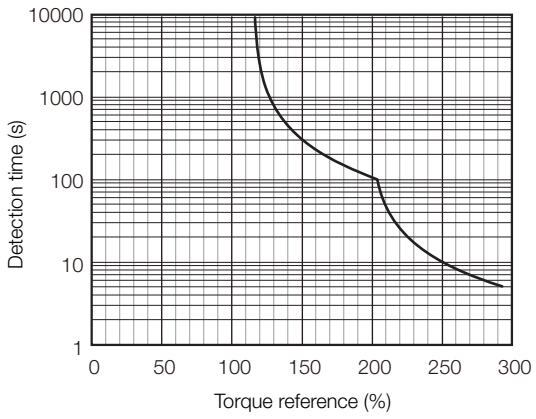

SGMCS-80M□A

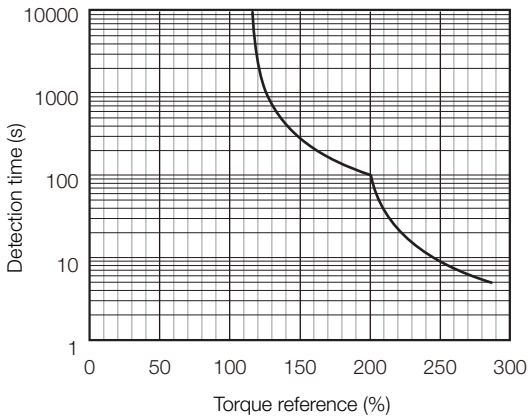

SGMCS-1AM□A and -80N□A

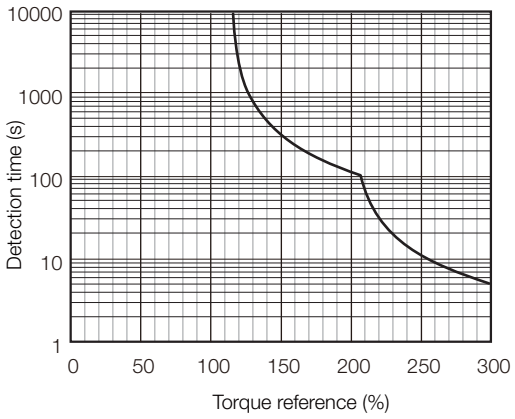

SGMCS-1EN□A

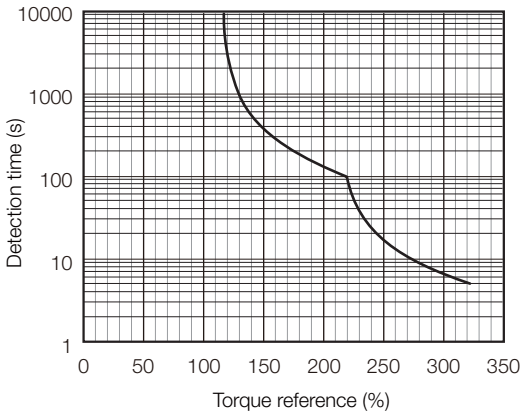

SGMCS-2ZN□A

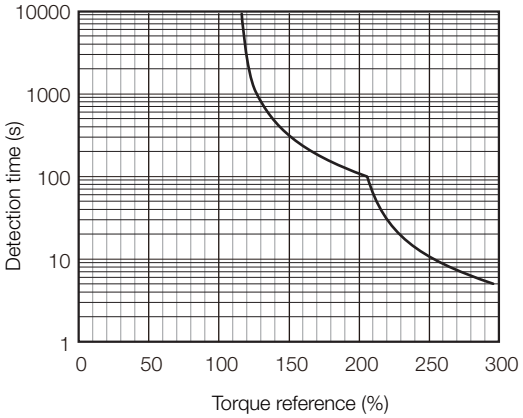

Note: The above overload protection characteristics do not mean that you can perform continuous duty operation with an output of 100% or higher. Use the Servo Motor so that the effective torque remains within the continuous duty zone given in *Medium-Capacity Servo Motors with Cores: Torque-Motor Speed Characteristics* on page 223.

Allowable Load Moment of Inertia Scaling Factor for SERVOPACKs without Built-in Regenerative Resistors

The following graphs show the allowable load moment of inertia scaling factor of the motor speed for SERVOPACKs without built-in regenerative resistors when an External Regenerative Resistor is not connected (applicable SERVOPACK: SGD7S-2R8A).

If the Servo Motor exceeds the allowable load moment of inertia, an overvoltage alarm may occur in the SERVOPACK.

These graphs provide reference data for deceleration at the rated torque or higher with a 200-VAC power supply input.

SGMCS-02B□C

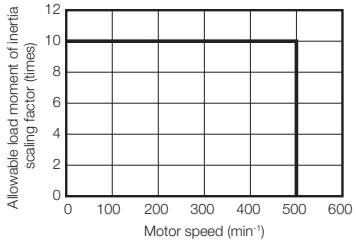

SGMCS-04C□C

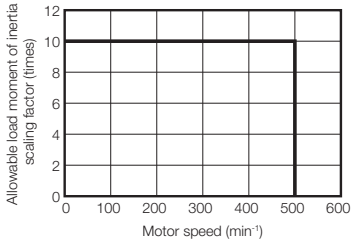

SGMCS-05B□C

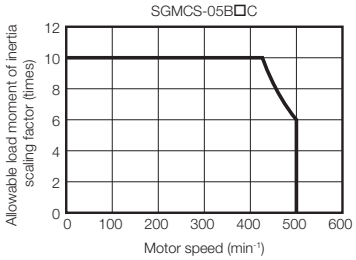

SGMCS-07B□C

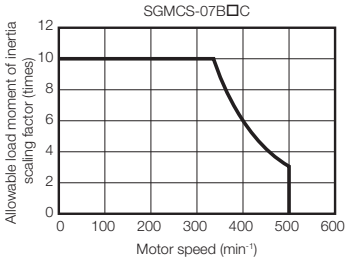

SGMCS-08D□C

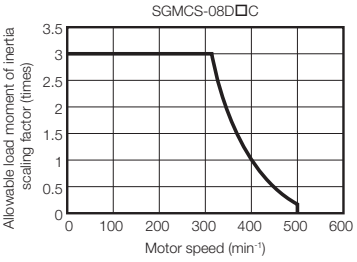

SGMCS-10C□C

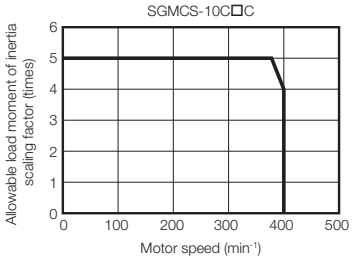

SGMCS-14C□C

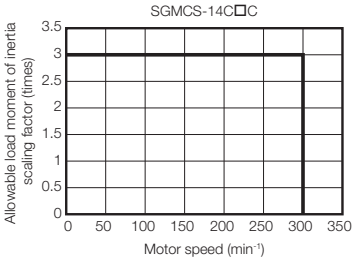

SGMCS-17D□C

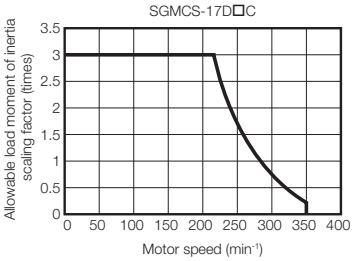

SGMCS-25D□C

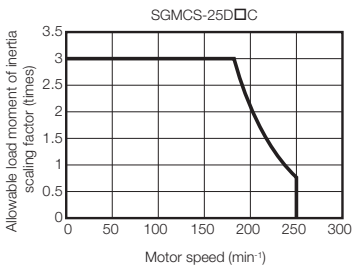

External Dimensions

Small-Capacity, Coreless Servo Motors

◆ SGMCS-□ □ B

• Flange Specification 1

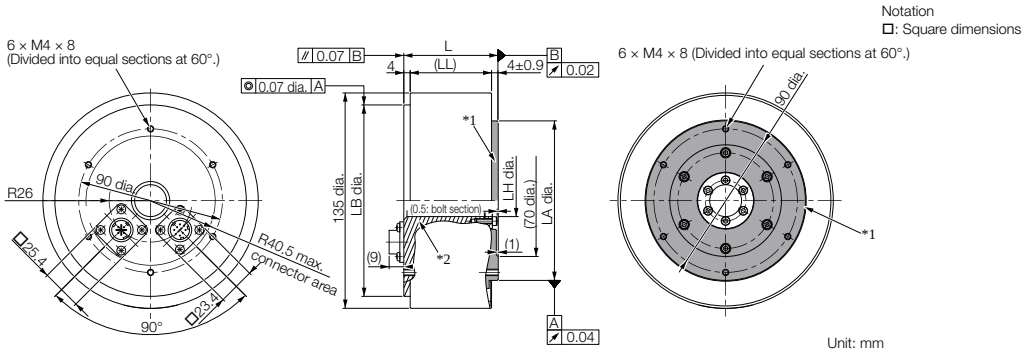

*1. The shaded section indicates the rotating parts.
*2. The hatched section indicates the non-rotating parts.
Note: Values in parentheses are reference dimensions.

Model SGMCS-	L	(LL)	LB	LH	LA	Approx. Mass [kg]
02B□ C11	59	51	$120^{\ 0}_{-0.035}$	$20^{+0.4}_{\ 0}$	$100^{\ 0}_{-0.035}$	4.8
05B□ C11	88	80	$120^{\ 0}_{-0.035}$	$20^{+0.4}_{\ 0}$	$100^{\ 0}_{-0.035}$	5.8
07B□ C11	128	120	$120^{\ 0}_{-0.035}$	$20^{+0.4}_{\ 0}$	$100^{\ 0}_{-0.035}$	8.2

• Flange Specification 4

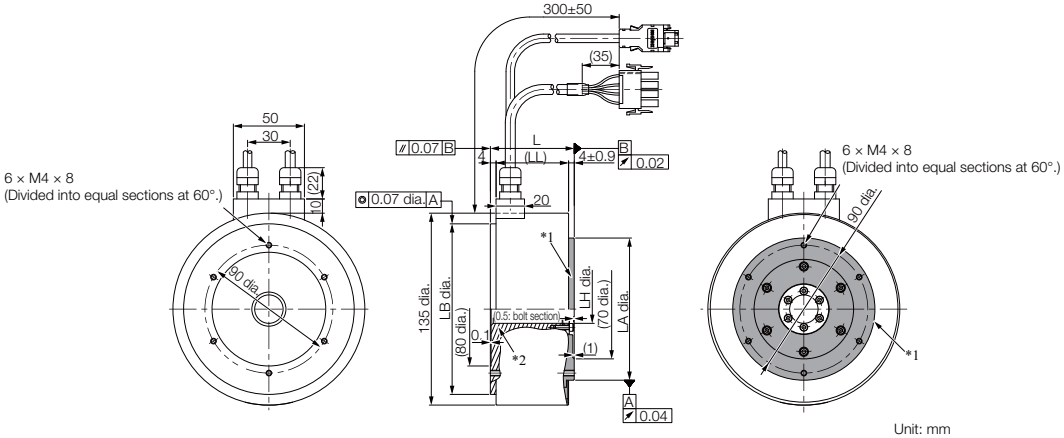

*1. The shaded section indicates the rotating parts.
*2. The hatched section indicates the non-rotating parts.
Note: Values in parentheses are reference dimensions.

Model SGMCS-	L	(LL)	LB	LH	LA	Approx. Mass [kg]
02B□C41	59	51	$120^{\ 0}_{-0.035}$	$20^{+0.4}_{\ 0}$	$100^{\ 0}_{-0.035}$	4.8
05B□C41	88	80	$120^{\ 0}_{-0.035}$	$20^{+0.4}_{\ 0}$	$100^{\ 0}_{-0.035}$	5.8
07B□C41	128	120	$120^{\ 0}_{-0.035}$	$20^{+0.4}_{\ 0}$	$100^{\ 0}_{-0.035}$	8.2

Refer to the following section for information on connectors.

☞ See Connector Specifications Page 232

◆ SGMCS-☐ ☐ C

• Flange Specification 1

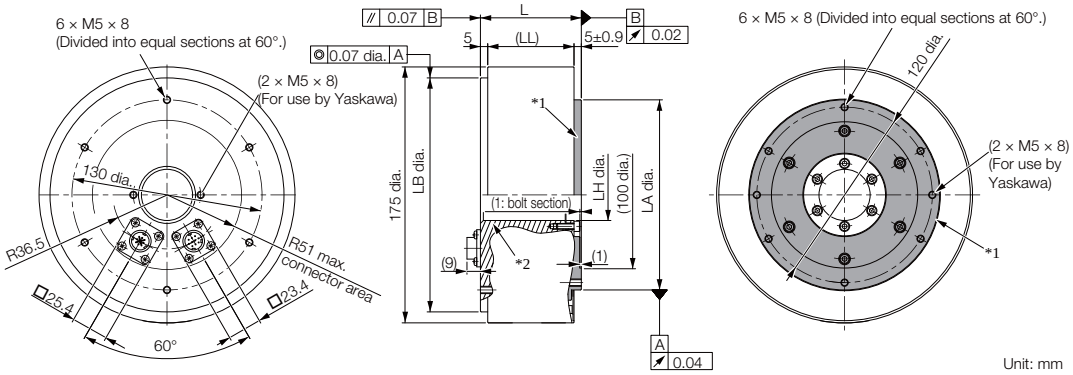

Unit: mm

*1. The shaded section indicates the rotating parts.
*2. The hatched section indicates the non-rotating parts.
Note: Values in parentheses are reference dimensions.

Model SGMCS-	L	(LL)	LB	LH	LA	Approx. Mass [kg]
04C☐ C11	69	59	$160\ ^{0}_{-0.040}$	$35\ ^{+0.4}_{0}$	$130\ ^{0}_{-0.040}$	7.2
10C☐ C11	90	80	$160\ ^{0}_{-0.040}$	$35\ ^{+0.4}_{0}$	$130\ ^{0}_{-0.040}$	10.2
14C☐ C11	130	120	$160\ ^{0}_{-0.040}$	$35\ ^{+0.4}_{0}$	$130\ ^{0}_{-0.040}$	14.2

• Flange Specification 4

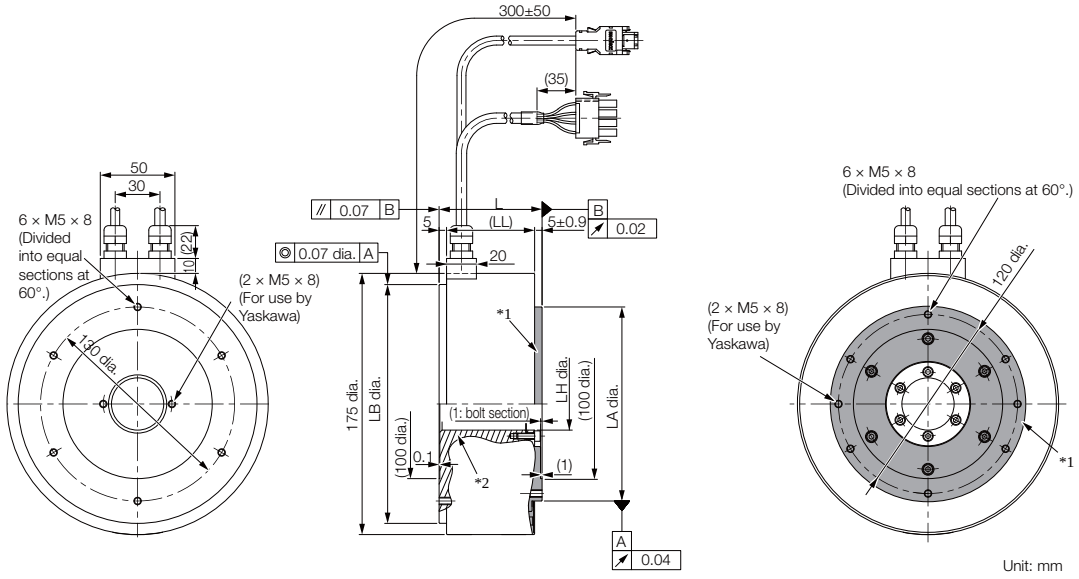

Unit: mm

*1. The shaded section indicates the rotating parts.
*2. The hatched section indicates the non-rotating parts.
Note: Values in parentheses are reference dimensions.

Model SGMCS-	L	(LL)	LB	LH	LA	Approx. Mass [kg]
04C☐ C41	69	59	$160\ ^{0}_{-0.040}$	$35\ ^{+0.4}_{0}$	$130\ ^{0}_{-0.040}$	7.2
10C☐ C41	90	80	$160\ ^{0}_{-0.040}$	$35\ ^{+0.4}_{0}$	$130\ ^{0}_{-0.040}$	10.2
14C☐ C41	130	120	$160\ ^{0}_{-0.040}$	$35\ ^{+0.4}_{0}$	$130\ ^{0}_{-0.040}$	14.2

Refer to the following section for information on connectors.

☞ See Connector Specifications Page 232

◆ SGMCS-□ □ D

• Flange Specification 1

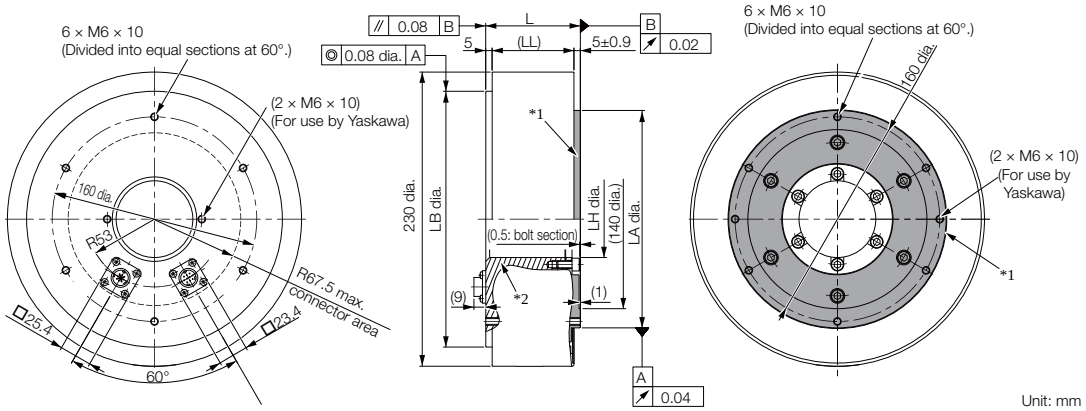

*1. The shaded section indicates the rotating parts.
*2. The hatched section indicates the non-rotating parts.
Note: Values in parentheses are reference dimensions.

Model SGMCS-	L	(LL)	LB	LH	LA	Approx. Mass [kg]
08D□ C11	74	64	$200^{\ 0}_{-0.046}$	$60^{+0.4}_{\ 0}$	$170^{\ 0}_{-0.040}$	14.0
17D□ C11	110	100	$200^{\ 0}_{-0.046}$	$60^{+0.4}_{\ 0}$	$170^{\ 0}_{-0.040}$	22.0
25D□ C11	160	150	$200^{\ 0}_{-0.046}$	$60^{+0.4}_{\ 0}$	$170^{\ 0}_{-0.040}$	29.7

• Flange Specification 4

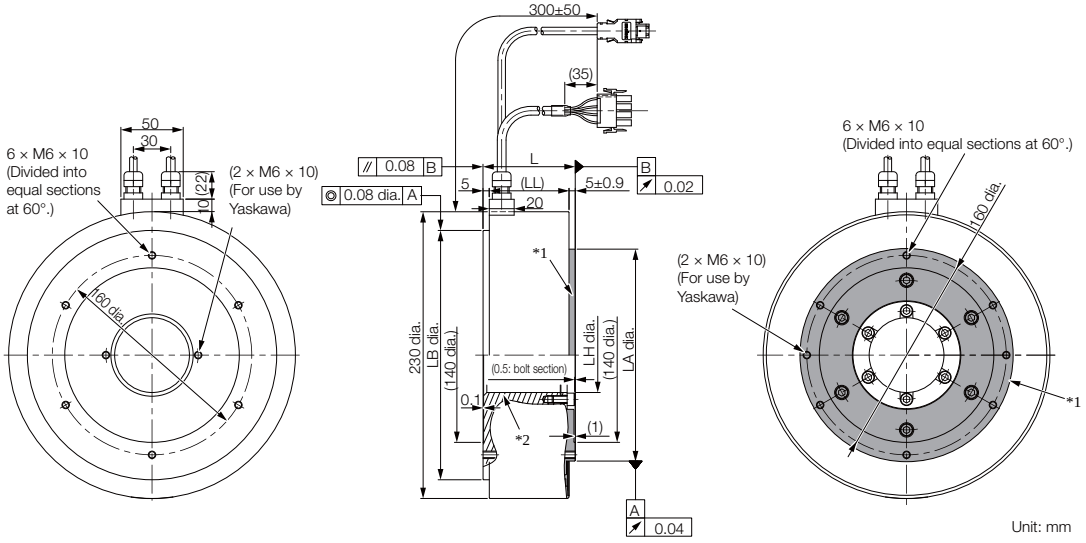

*1. The shaded section indicates the rotating parts.
*2. The hatched section indicates the non-rotating parts.
Note: Values in parentheses are reference dimensions.

Model SGMCS-	L	(LL)	LB	LH	LA	Approx. Mass [kg]
08D□ C41	74	64	$200^{\ 0}_{-0.046}$	$60^{+0.4}_{\ 0}$	$170^{\ 0}_{-0.040}$	14.0
17D□ C41	110	100	$200^{\ 0}_{-0.046}$	$60^{+0.4}_{\ 0}$	$170^{\ 0}_{-0.040}$	22.0
25D□ C41	160	150	$200^{\ 0}_{-0.046}$	$60^{+0.4}_{\ 0}$	$170^{\ 0}_{-0.040}$	29.7

Refer to the following section for information on connectors.

☞ See Connector Specifications Page 232

◆ SGMCS-□□E

• Flange Specification 1

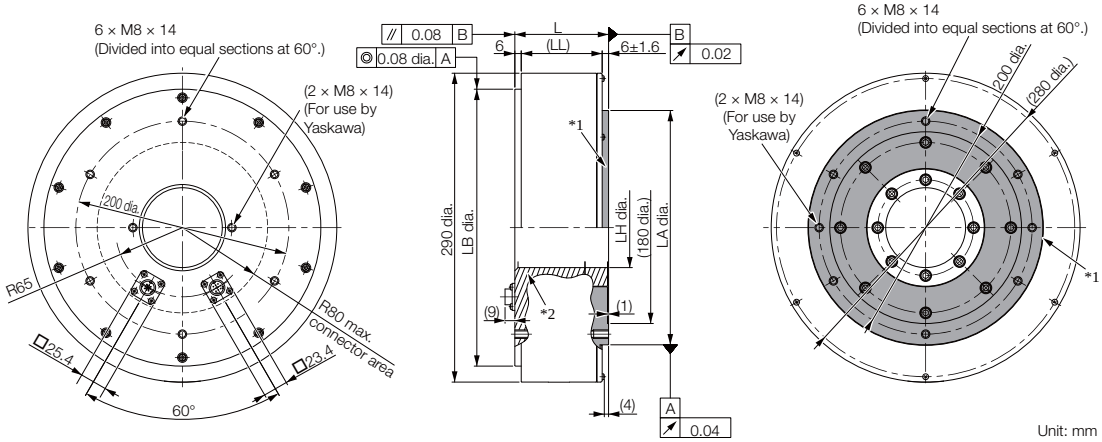

Unit: mm

*1. The shaded section indicates the rotating parts.
*2. The hatched section indicates the non-rotating parts.
Note: Values in parentheses are reference dimensions.

Model SGMCS-	L	(LL)	LB	LH	LA	Approx. Mass [kg]
16E□ B11	88	76	$260^{\ 0}_{-0.052}$	$75^{+0.4}_{\ 0}$	$220^{\ 0}_{-0.046}$	26.0
35E□ B11	112	100	$260^{\ 0}_{-0.052}$	$75^{+0.4}_{\ 0}$	$220^{\ 0}_{-0.046}$	34.0

• Flange Specification 4

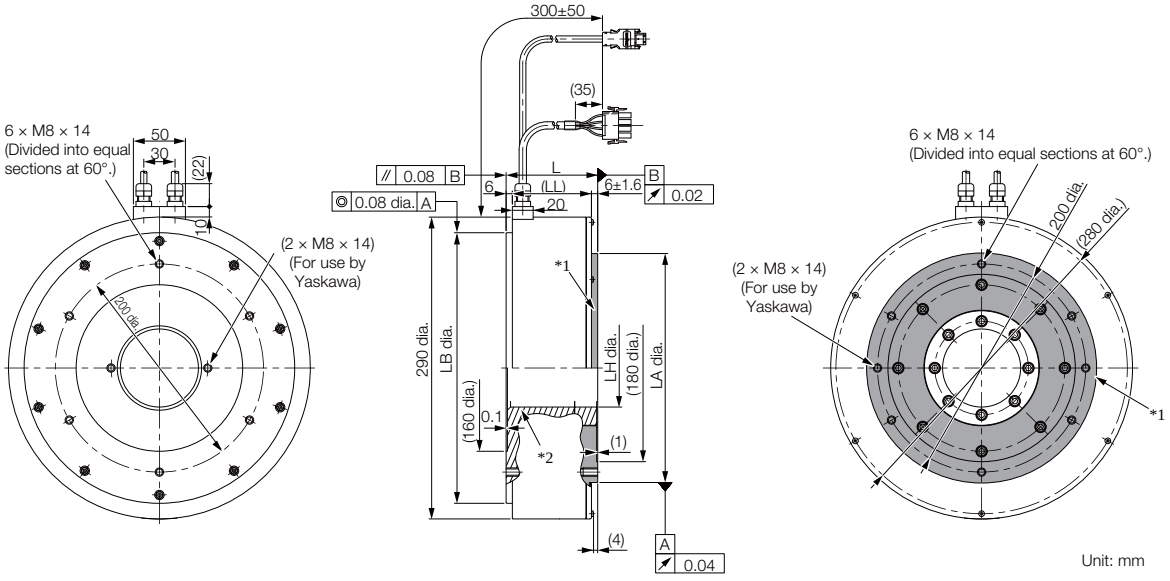

Unit: mm

*1. The shaded section indicates the rotating parts.
*2. The hatched section indicates the non-rotating parts.
Note: Values in parentheses are reference dimensions.

Model SGMCS-	L	(LL)	LB	LH	LA	Approx. Mass [kg]
16E□ B41	88	76	$260^{\ 0}_{-0.052}$	$75^{+0.4}_{\ 0}$	$220^{\ 0}_{-0.046}$	26.0
35E□ B41	112	100	$260^{\ 0}_{-0.052}$	$75^{+0.4}_{\ 0}$	$220^{\ 0}_{-0.046}$	34.0

Refer to the following section for information on connectors.

☞ See Connector Specifications Page 232

Medium-Capacity Servo Motors with Cores

◆ SGMCS-□ □ M

• Flange Specification 1

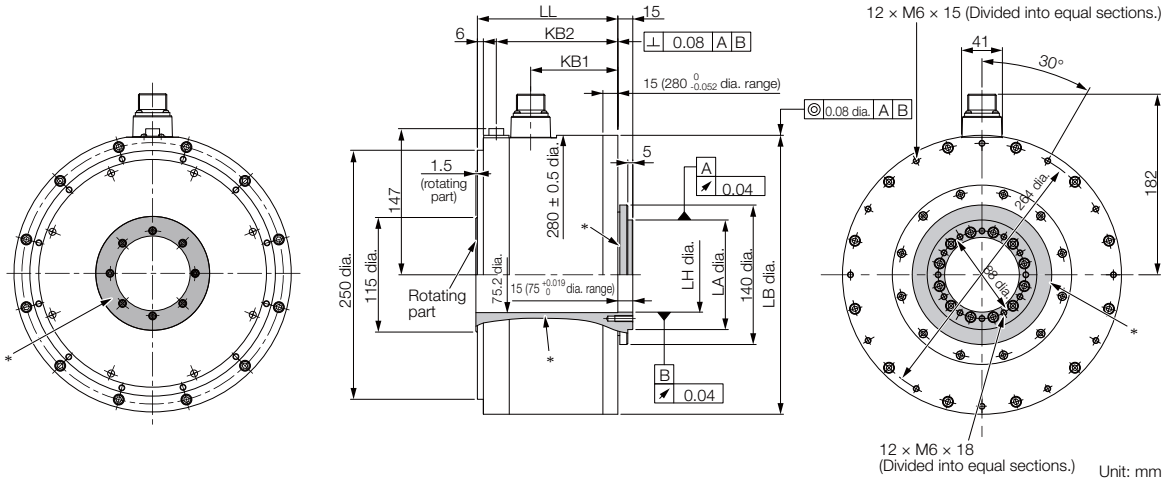

* The shaded section indicates the rotating parts.

Model SGMCS-	LL	KB1	KB2	LB	LH	LA	Approx. Mass [kg]
45M□ A11	141	87.5	122	280 $^{0}_{-0.052}$	75 $^{+0.019}_{0}$	110 $^{0}_{-0.035}$	38
80M□ A11	191	137.5	172	280 $^{0}_{-0.052}$	75 $^{+0.019}_{0}$	110 $^{0}_{-0.035}$	45
1AM□ A11	241	187.5	222	280 $^{0}_{-0.052}$	75 $^{+0.019}_{0}$	110 $^{0}_{-0.035}$	51

• Flange Specification 3

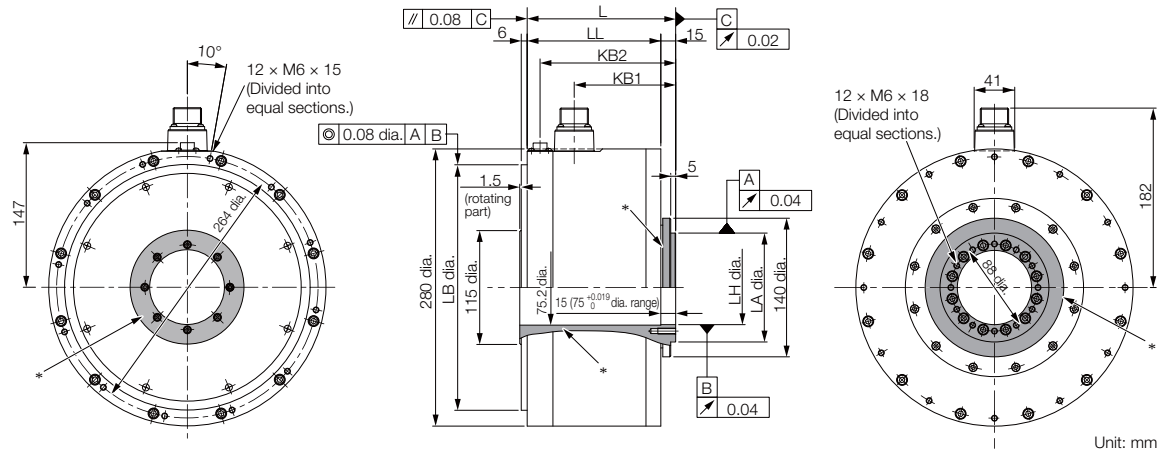

* The shaded section indicates the rotating parts.

Model SGMCS-	L	LL	KB1	KB2	LB	LH	LA	Approx. Mass [kg]
45M□ A31	150	135	102.5	137	248 $^{0}_{-0.046}$	75 $^{+0.019}_{0}$	110 $^{0}_{-0.035}$	38
80M□ A31	200	185	152.5	187	248 $^{0}_{-0.046}$	75 $^{+0.019}_{0}$	110 $^{0}_{-0.035}$	45
1AM□ A31	250	235	202.5	237	248 $^{0}_{-0.046}$	75 $^{+0.019}_{0}$	110 $^{0}_{-0.035}$	51

Refer to the following section for information on connectors.

☞ See Connector Specifications Page 232

◆ SGMCS-□ □ N

• Flange Specification 1

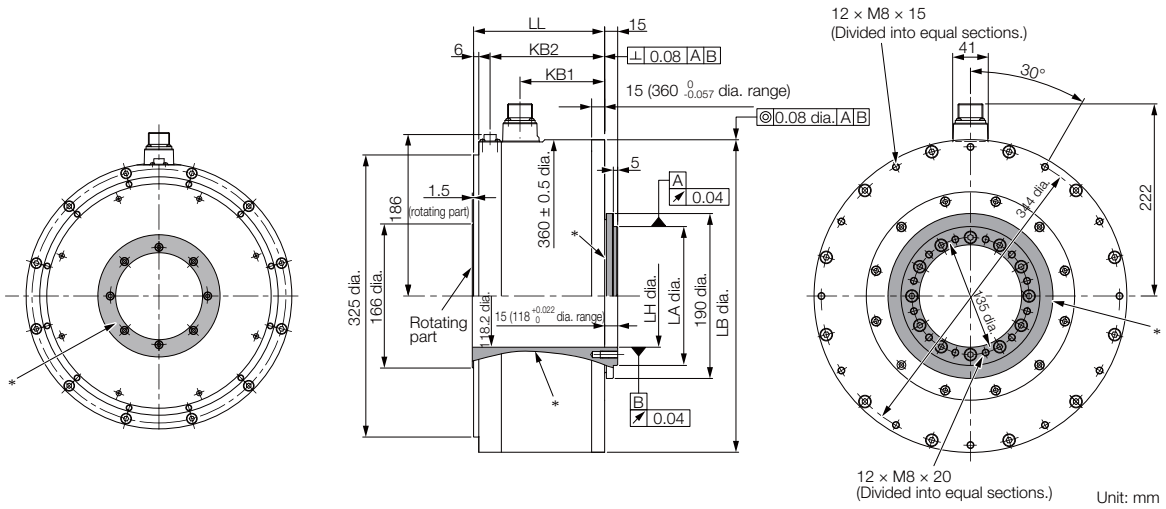

* The shaded section indicates the rotating parts.

Model SGMCS-	LL	KB1	KB2	LB	LH	LA	Approx. Mass [kg]
80N□ A11	151	98	132	360 $^{0}_{-0.057}$	118 $^{+0.022}_{0}$	160 $^{0}_{-0.040}$	50
1EN□ A11	201	148	182	360 $^{0}_{-0.057}$	118 $^{+0.022}_{0}$	160 $^{0}_{-0.040}$	68
2ZN□ A11	251	198	232	360 $^{0}_{-0.057}$	118 $^{+0.022}_{0}$	160 $^{0}_{-0.040}$	86

• Flange Specification 3

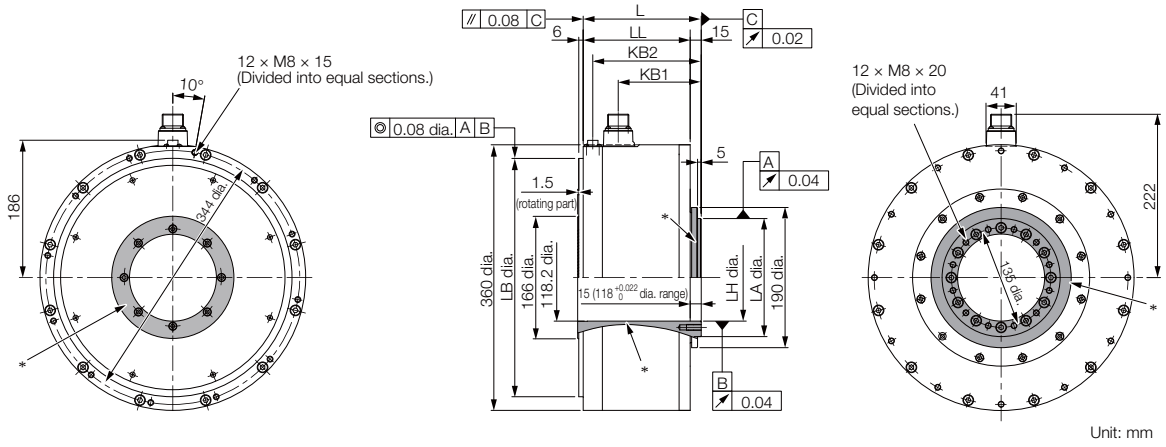

* The shaded section indicates the rotating parts.

Model SGMCS-	L	LL	KB1	KB2	LB	LH	LA	Approx. Mass [kg]
80N□ A31	160	145	113	147	323 $^{0}_{-0.057}$	118 $^{+0.022}_{0}$	160 $^{0}_{-0.040}$	50
1EN□ A31	210	195	163	197	323 $^{0}_{-0.057}$	118 $^{+0.022}_{0}$	160 $^{0}_{-0.040}$	68
2ZN□ A31	260	245	213	247	323 $^{0}_{-0.057}$	118 $^{+0.022}_{0}$	160 $^{0}_{-0.040}$	86

Refer to the following section for information on connectors.

☞ See Connector Specifications Page 232

Connector Specifications

◆ SGMCS-☐ ☐ B, -☐ ☐ C, -☐ ☐ D, or -☐ ☐ E with Flange Specification 1

• Servo Motor Connector Specifications

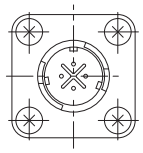

Model: JN1AS04MK2R
Manufacturer: Japan Aviation Electronics Industry, Ltd.

Mating connector: JN1DS04FK1
(Not provided by Yaskawa.)

• Encoder Connector Specifications

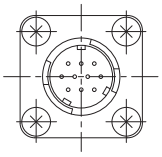

Model: JN1AS10ML1-R
Manufacturer: Japan Aviation Electronics Industry, Ltd.

Mating connector: JN1DS10SL1
(Not provided by Yaskawa.)

◆ SGMCS-☐ ☐ B, -☐ ☐ C, -☐ ☐ D, or -☐ ☐ E with Flange Specification 4

• Servo Motor Connector Specifications

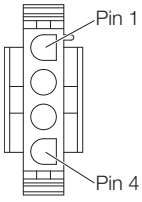

Model
•Plug: 350779-1
•Pins: 350561-3 or 350690-3 (No.1 to 3)
•Ground pin: 350654-1 or 350669-1 (No. 4)
Manufacturer: Tyco Electronics Japan G.K.

Mating Connector
•Cap: 350780-1
•Socket: 350570-3 or 350689-3

• Encoder Connector Specifications

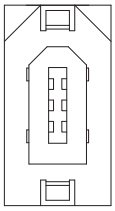

Model: 55102-0600
Manufacturer: Molex Japan Co., Ltd.

Mating connector: 54280-0609

◆ SGMCS-☐ ☐ M or -☐ ☐ N with Flange Specification 1 or 3

- Servo Motor Connector Specifications

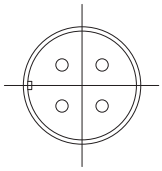

Model: CE05-2A18-10PD
Manufacturer: DDK Ltd.

Mating Connector
Plug: CE05-6A18-10SD-B-BSS
Cable clamp: CE3057-10A-☐(D265)

- Encoder Connector Specifications

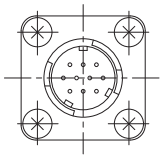

Model: JN1AS10ML1
Manufacturer: Japan Aviation Electronics Industry, Ltd.

Mating connector: JN1DS10SL1

Selecting Cables

◆ Cable Configurations

The cables shown below are required to connect a Servo Motor to a SERVOPACK.

Encoder Cable of 20 m or Less

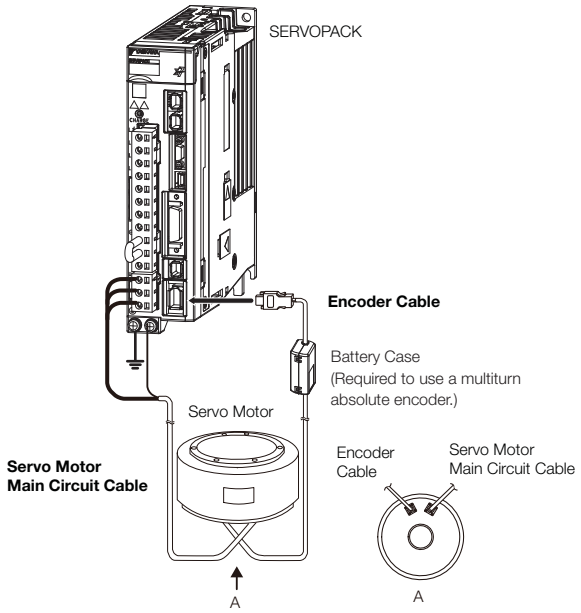

Encoder Cable of 30 m to 50 m (Relay Cable)

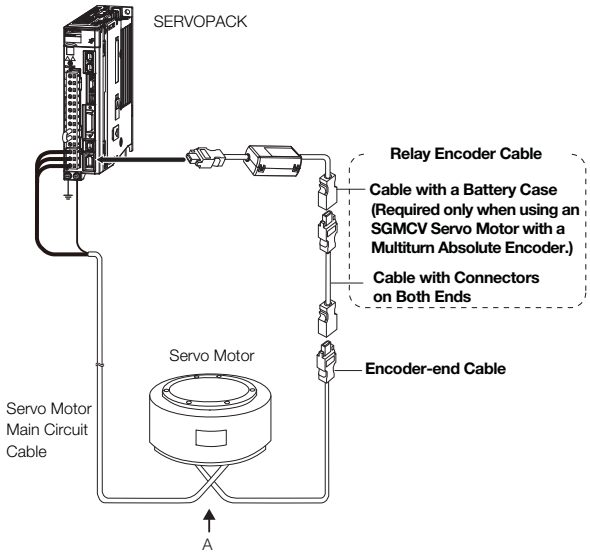

Note: 1. If the cable length exceeds 20 m, be sure to use a Relay Encoder Cable.

2. If you use a Servo Motor Main Circuit Cable that exceeds 20 m, the intermittent duty zone in the torque-motor speed characteristics will become smaller because the voltage drop increases.

3. Refer to the following manual for the following information.
   - Cable dimensional drawings and cable connection specifications
   - Order numbers and specifications of individual connectors for cables
   - Order numbers and specifications for wiring materials

   📖 *Σ-7-Series AC Servo Drive Peripheral Device Selection Manual* (Manual No.: SIEP S800001 32)

Servo Motor Main Circuit Cables

◆ SGMCS-☐ ☐

Servo Motor Model	Length (L)	Order Number		Appearance
		Standard Cable	Flexible Cable*1	
SGMCS-☐ ☐ B SGMCS-☐ ☐ C SGMCS-☐ ☐ D SGMCS-☐ ☐ E Flange specification*2: 1 Non-load side installation	3 m	JZSP-CMM60-03-E	JZSP-CSM60-03-E	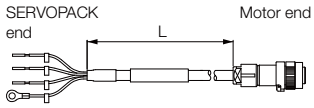
	5 m	JZSP-CMM60-05-E	JZSP-CSM60-05-E	
	10 m	JZSP-CMM60-10-E	JZSP-CSM60-10-E	
	15 m	JZSP-CMM60-15-E	JZSP-CSM60-15-E	
	20 m	JZSP-CMM60-20-E	JZSP-CSM60-20-E	
SGMCS-☐ ☐ B SGMCS-☐ ☐ C SGMCS-☐ ☐ D SGMCS-☐ ☐ E Flange specification*2: 4 Non-load side installation (with cable on side)	3 m	JZSP-CMM00-03-E	JZSP-CMM01-03-E	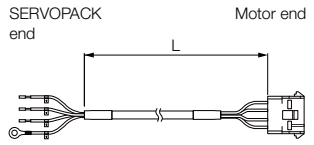
	5 m	JZSP-CMM00-05-E	JZSP-CMM01-05-E	
	10 m	JZSP-CMM00-10-E	JZSP-CMM01-10-E	
	15 m	JZSP-CMM00-15-E	JZSP-CMM01-15-E	
	20 m	JZSP-CMM00-20-E	JZSP-CMM01-20-E	
SGMCS-☐ ☐ M SGMCS-☐ ☐ N ☐ ☐ : 45, 80, 1A	3 m	B1EV-03(A)-E	B1EP-03(A)-E	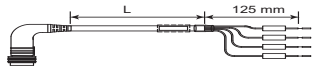
	5 m	B1EV-05(A)-E	B1EP-05(A)-E	
	10 m	B1EV-10(A)-E	B1EP-10(A)-E	
	15 m	B1EV-15(A)-E	B1EP-15(A)-E	
	20 m	B1EV-20(A)-E	B1EP-20(A)-E	
SGMCS-☐☐N ☐ ☐ : 1E, 2Z	3 m	B2EV-03(A)-E	B2EP-03(A)-E	
	5 m	B2EV-05(A)-E	B2EP-05(A)-E	
	10 m	B2EV-10(A)-E	B2EP-10(A)-E	
	15 m	B2EV-15(A)-E	B2EP-15(A)-E	
	20 m	B2EV-20(A)-E	B2EP-20(A)-E	

*1. Use Flexible Cables for moving parts of machines, such as robots.

*2. Refer to the following section for the flange specifications.

☞ See Flange Specifications Page 237

Note: Direct Drive Servo Motors are not available with holding brakes.

Encoder Cables of 20 m or Less

◆ SGMCS-□ □

Servo Motor Model	Name	Length (L)	Order Number		Appearance
			Standard Cable	Flexible Cable*1	
SGMCS-□ □ Flange specification*2: 1 or 3	For incremental/ absolute encoder	3 m	JZSP-CMP60-03-E	JZSP-CSP60-03-E	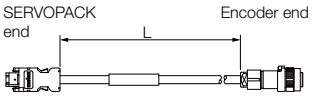
		5 m	JZSP-CMP60-05-E	JZSP-CSP60-05-E	
		10 m	JZSP-CMP60-10-E	JZSP-CSP60-10-E	
		15 m	JZSP-CMP60-15-E	JZSP-CSP60-15-E	
		20 m	JZSP-CMP60-20-E	JZSP-CSP60-20-E	
SGMCS-□ □ Flange Specification*2: 4		3 m	JZSP-CMP00-03-E	JZSP-CMP10-03-E	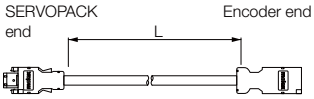
		5 m	JZSP-CMP00-05-E	JZSP-CMP10-05-E	
		10 m	JZSP-CMP00-10-E	JZSP-CMP10-10-E	
		15 m	JZSP-CMP00-15-E	JZSP-CMP10-15-E	
		20 m	JZSP-CMP00-20-E	JZSP-CMP10-20-E	

*1. Use Flexible Cables for moving parts of machines, such as robots.

*2. Refer to the following section for the flange specifications.

☞ See Flange Specifications Page 237

Relay Encoder Cables of 30 m to 50 m

◆ SGMCS-☐ ☐

Servo Motor Model	Name	Length (L)	Order Number[*1]	Appearance
SGMCS-☐ ☐ Flange specification[*2]: 1 or 3	Encoder-end Cable (for incremental or absolute encoder)	0.3 m	JZSP-CSP15-E	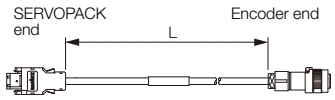
SGMCS-☐ ☐ Flange specification[*2]: 1, 3, or 4	Cables with Connectors on Both Ends (for incremental or absolute encoder)	30 m	JZSP-UCMP00-30-E	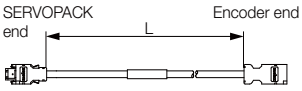
		40 m	JZSP-UCMP00-40-E	
		50 m	JZSP-UCMP00-50-E	

*1. Flexible Cables are not available.

*2. Refer to the following section for the flange specifications.

☞ See Flange Specifications Page 237

Flange Specifications

◆ SGMCS-☐ ☐

Flange Specification Code (6th Digit)	Flange Location	Servo Motor Outer Diameter Code (3rd Digit)					
		B	C	D	E	M	N
1	Non-load side	✓	✓	✓	✓	–	–
	Load-side	–	–	–	–	✓	✓
3	Non-load side	–	–	–	–	✓	✓
4	Non-load side (with cable on side)	✓	✓	✓	✓	–	–

✓: Applicable models

Linear Servo Motors

SGLFW2 (Models with F-type Iron Cores, 200V) ..240

SGLFW2 (Models with F-type Iron Cores, 400V) ..268

SGLG (Coreless Models) 288

SGLT (Models with T-type Iron Cores) 318

Recommended Linear Encoders and Cables 348

SGLFW (Earlier Models with F-type Iron Cores) ...372

SGLFW2 (Models with F-type Iron Cores, 200V)

Model Designations

◆ Moving Coil

S G L F W 2 - 30 A 070 A S □

Linear Σ Series Linear Servomotors | 1st digit | 2nd digit | 3rd+4th digits | 5th digit | 6th+7th+8th digits | 9th digit | 10th digit | 11th digit

1st digit Servomotor Type

Code	Specification
F	With F-type iron core

2nd digit Moving Coil/Magnetic Way

Code	Specification
W	Moving Coil

3rd+4th digits Magnet Height

Code	Specification
30	30 mm
45	45 mm
90	90 mm
1D	135 mm

5th digit Power Supply Voltage

Code	Specification
A	200 VAC

6th+7th+8th digits Length of Moving Coil

Code	Specification
070	70 mm
120	125 mm
200	205 mm
230	230 mm
380	384 mm
560	563 mm

9th digit Design Revision Order

A

10th digit Sensor Specification

Code	Specification
S	With polarity sensor and Thermal Protector
T	Without polarity sensor, with thermal protector

11th digit Cooling Method

Code	Specification
None	Self-cooled
L	Water-cooled*

■ Non Stock Items

Note: This information is provided to explain model numbers. It is not meant to imply that models are available for all combinations of codes.

* Contact your Yaskawa representative for information on water-cooled models.

◆ Magnetic Way

S G L F M 2 - 30 270 A

Linear Σ Series Linear Servomotors | 1st digit | 2nd digit | 3rd+4th digits | 5th+6th+7th digits | 8th digit

1st digit Servomotor Type

(Same as for the Moving Coil.)

2nd digit Moving Coil/Magnetic Way

Code	Specification
M	Magnetic Way

3rd+4th digits Magnet Height

(Same as for the Moving Coil.)

5th+6th+7th digits Length of Magnetic Way

Code	Specification
270	270 mm
306	306 mm
450	450 mm
510	510 mm
630	630 mm
714	714 mm

8th digit Design Revision Order

A

Precautions on Moving Coils with Polarity Sensors

Note

When you use a Moving Coil with a Polarity Sensor, the Magnetic Way must cover the bottom of the polarity sensor. Refer to the example that shows the correct installation.
When determining the length of the Moving Coil's stroke or the length of the Magnetic Way, consider the total length (L) of the Moving Coil and the polarity sensor. Refer to the following table.

Correct Installation

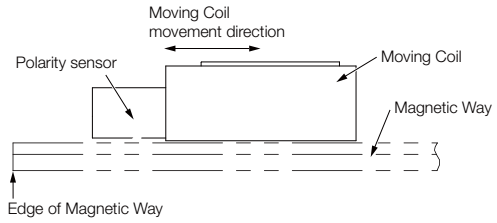

Incorrect Installation

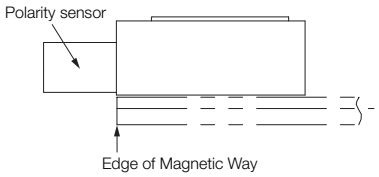

◆ Total Length of Moving Coil with Polarity Sensor

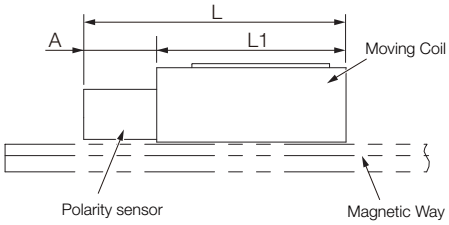

Moving Coil Model SGLFW2-	Length of Moving Coil, L1 [mm]	Length of Polarity Sensor, A [mm]	Total Length, L [mm]
30A070AS	70	29	97
30A120AS	125		152
30A230AS	230		257
45A200AS	205	34	237
45A380AS	384		416
90A200AS	205	34	237
90A380AS	384		416
90A560AS	563		595
1DA380AS	384	32	416
1DA560AS	563		595

Specifications and Ratings

Specifications

Linear Servomotor Moving Coil Model SGLFW2-		30A			45A		90A			1DA	
		070A□	120A□	230A□	200A□	380A□	200A□	380A□	560A□	380A□	560A□
Time Rating		Continuous									
Thermal Class		B									
Insulation Resistance		500 VDC, 10 MΩ min.									
Withstand Voltage		1,500 VAC for 1 minute									
Excitation		Permanent magnet									
Cooling Method		Self-cooled and water-cooled*									
Protective Structure		IP00									
Environmental Conditions	Surrounding Air Temperature	0°C to 40°C (with no freezing)									
	Surrounding Air Humidity	20% to 80% relative humidity (with no condensation)									
	Installation Site	• Must be indoors and free of corrosive and explosive gases. • Must be well-ventilated and free of dust and moisture. • Must facilitate inspection and cleaning. • Must have an altitude of 1,000 m or less. • Must be free of strong magnetic fields.									
Shock Resistance	Impact Acceleration Rate	196 m/s^2									
	Number of Impacts	2 times									
Vibration Resistance	Vibration Acceleration Rate	49 m/s^2 (the vibration resistance in three directions, vertical, side-to-side, and front-to-back)									

* Contact your Yaskawa representative for information on water-cooled models.

Ratings

Linear Servomotor Moving Coil Model SGLFW2-			30A				45A		
			070A□	120A□	230A□		200A□	380A□	
Rated Motor Speed (Reference Speed during Speed Control)*1		m/s	4.0	4.0	4.0		4.0	4.0	
Maximum Speed*1		m/s	5.0	5.0	5.0		4.5	4.5	
Rated Force*1, *2		N	45	90	180	170	280	560	
Maximum Force*1		N	135	270	540	500	840	1680	1500
Rated Current*1		Arms	1.4	1.5	2.9	2.8	4.4	8.7	
Maximum Current*1		Arms	5.3	5.2	10.5	9.3	16.4	32.7	27.5
Moving Coil Mass		kg	0.50	0.90	1.7		2.9	5.5	
Force Constant		N/Arms	33.3	64.5	64.5		67.5	67.5	
BEMF Constant		Vrms/(m/s)/phase	11.1	21.5	21.5		22.5	22.5	
Motor Constant		N/$\sqrt{W}$	11.3	17.3	24.4		36.9	52.2	
Electrical Time Constant		ms	7.6	7.3	7.3		19	19	
Mechanical Time Constant		ms	3.9	3.0	2.9		2.1	2.0	
Thermal Resistance (with Heat Sink)		K/W	2.62	1.17	0.79		0.60	0.44	
Thermal Resistance (without Heat Sink)		K/W	11.3	4.43	2.55		2.64	1.49	
Magnetic Attraction		N	200	630	1260		2120	4240	
Maximum Allowable Payload		kg	5.6	9.4	34	10	58	110	95
Maximum Allowable Payload (With External Regenerative Resistor and External Dynamic Brake Resistor*3)		kg	5.6	11	34	20	64	110	110
Combined Magnetic Way, SGLFM2-			30□□□A				45□□□A		
Combined Serial Converter Unit, JZDP-□□□□-			628	629	630		631	632	
Applicable SERVOPACKs	SGD7S-		1R6A, 2R1F		3R8A	2R8A, 2R8F	5R5A	180A	120A
	SGD7W- SGD7C-		1R6A		–	2R8A	5R5A	–	

*1. These values are for operation in combination with a SERVOPACK when the temperature of the armature winding is 100°C. The values for other items are at 20°C. These are typical values.

*2. The rated forces are the continuous allowable force values at a surrounding air temperature of 40°C with an aluminum heat sink of the dimensions given in the following table.
- Heat Sink Dimensions
  - 150 mm × 100 mm × 10 mm: SGLFW2-30A070A
  - 254 mm × 254 mm × 25 mm: SGLFW2-30A120A and -30A230A
  - 400 mm × 500 mm × 25 mm: SGLFW2-45A200A and -45A380A

*3. To externally connect dynamic brake resistor, select hardware option specification 020 for the SERVOPACK. However, you cannot externally connect dynamic brake resistor if you use the following SERVOPACKs (maximum applicable motor capacity: 400 W).
- SGD7S-R70□□□A020 to -2R8□□□A020
- SGD7W-1R6A20A020 to -2R8A20A020
- SGD7C-1R6AMAA020 to -2R8AMAA020

Ratings

Linear Servomotor Moving Coil Model SGLFW2-			90A			1DA	
			200A□	380A□	560A□	380A□	560A□
Rated Motor Speed (Reference Speed during Speed Control)*1		m/s	4.0	4.0	4.0	2.0	2.0
Maximum Speed*1		m/s	4.0	4.0	4.0	2.5	2.5
Rated Force*1, *2		N	560	1120	1680	1680	2520
Maximum Force*1		N	1680	3360	5040	5040	7560
Rated Current*1		Arms	7.2	14.4	21.6	14.4	21.6
Maximum Current*1		Arms	26.9	53.9	80.8	53.9	80.8
Moving Coil Mass		kg	5.3	10.1	14.9	14.6	21.5
Force Constant		N/Arms	82.0	82.0	82.0	123	123
BEMF Constant		Vrms/(m/s)/phase	27.3	27.3	27.3	41.0	41.0
Motor Constant		$N/\sqrt{W}$	58.1	82.2	101	105	129
Electrical Time Constant		ms	24	23	24	25	25
Mechanical Time Constant		ms	1.6	1.5	1.5	1.3	1.3
Thermal Resistance (with Heat Sink)		K/W	0.45	0.21	0.18	0.18	0.12
Thermal Resistance (without Heat Sink)		K/W	1.81	1.03	0.72	0.79	0.55
Magnetic Attraction		N	4240	8480	12700	12700	19100
Maximum Allowable Payload		kg	130	160	360	690	1000
Maximum Allowable Payload (With External Regenerative Resistor and External Dynamic Brake Resistor)		kg	140	290	440	710	1000
Combined Magnetic Way, SGLFM2-			90□□□A			1D□□□A	
Combined Serial Converter Unit, JZDP-□□□□-			633	634	648	649	650
Applicable SERVOPACKs	SGD7S-		120A	200A	330A	200A	330A
	SGD7W- SGD7C-		–				

*1. These values are for operation in combination with a SERVOPACK when the temperature of the armature winding is 100°C. The values for other items are at 20°C. These are typical values.

*2. The rated forces are the continuous allowable force values at a surrounding air temperature of 40°C with an aluminum heat sink of the dimensions given in the following table.

- Heat Sink Dimensions
  - 400 mm × 500 mm × 25 mm: SGLFW2-90A200A
  - 609 mm × 762 mm × 40 mm: SGLFW2-90A380A
  - 900 mm × 762 mm × 40 mm: SGLFW2-90A560A and -1DA380A
  - 1,400 mm × 900 mm × 40 mm: SGLFW2-1DA560A

Force-Motor Speed Characteristics

A : Continuous duty zone ——— (solid lines): With three-phase 200-V input
B : Intermittent duty zone - - - - - - (dotted lines): With single-phase 200-V input
— – — (dashed-dotted lines): With single-phase 100-V input

SGLFW2-30A070A

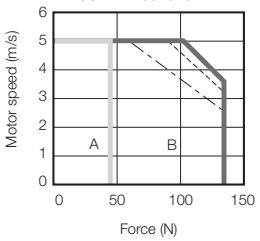

SGLFW2-30A120A

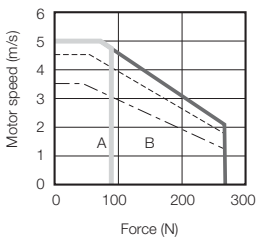

SGLFW2-30A230A
(Combined with SGD7□-2R8A)

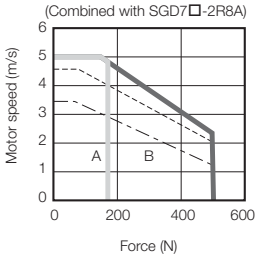

SGLFW2-30A230A
(Combined with SGD7S-3R8A)

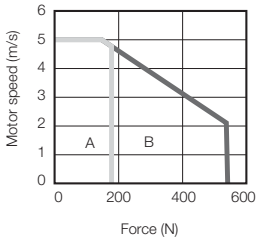

SGLFW2-45A200A

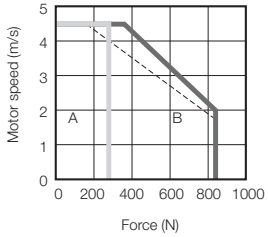

SGLFW2-45A380A
(Combined with SGD7S-120A)

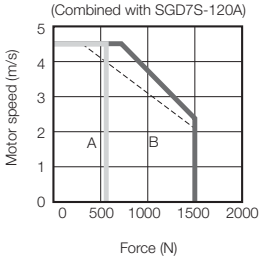

SGLFW2-45A380A
(Combined with SGD7S-180A)

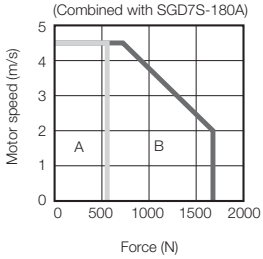

SGLFW2-90A200A

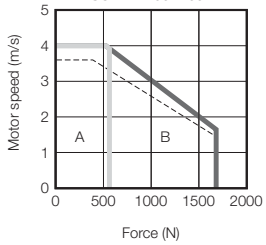

SGLFW2-90A380A

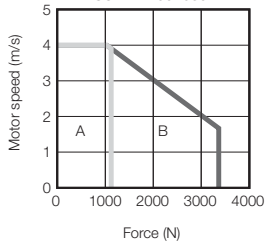

SGLFW2-90A560A

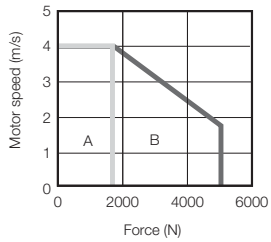

SGLFW2-1DA380A

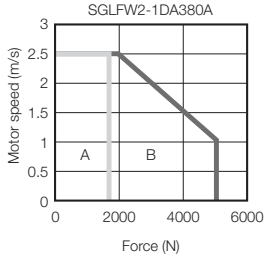

SGLFW2-1DA560A

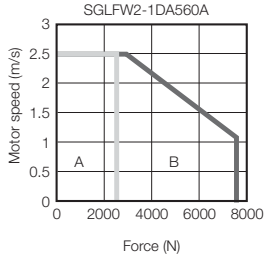

Note: 1. These values (typical values) are for operation in combination with a SERVOPACK when the temperature of the armature winding is 100°C.
2. The characteristics in the intermittent duty zone depend on the power supply voltage.
3. If the effective force is within the allowable range for the rated force, the Servomotor can be used within the intermittent duty zone.
4. If you use a Servomotor Main Circuit Cable that exceeds 20 m, the intermittent duty zone in the torque-motor speed characteristics will become smaller because the voltage drop increases.

Servomotor Overload Protection Characteristics

The overload detection level is set for hot start conditions with a Servomotor surrounding air temperature of 40°C.

SGLFW2-30A070A

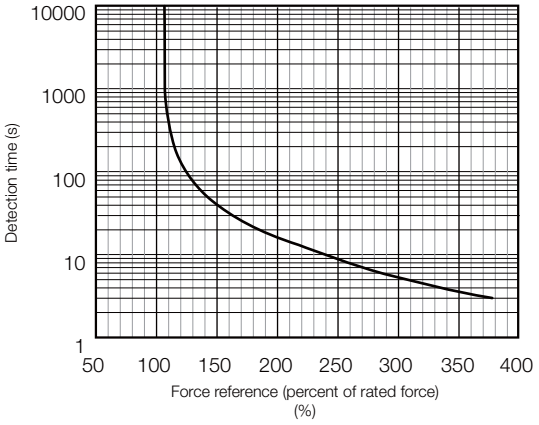

SGLFW2-30A120A and -230A

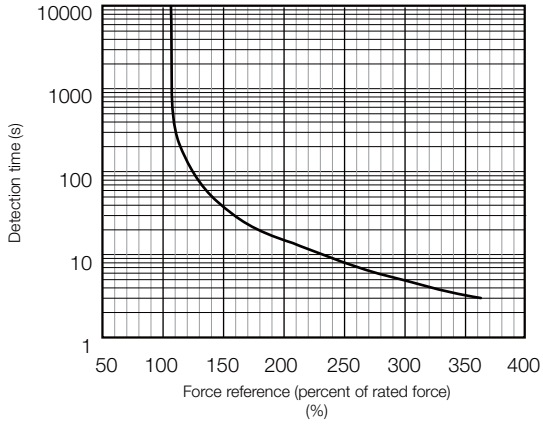

SGLFW2-45A, -90A, and -1DA

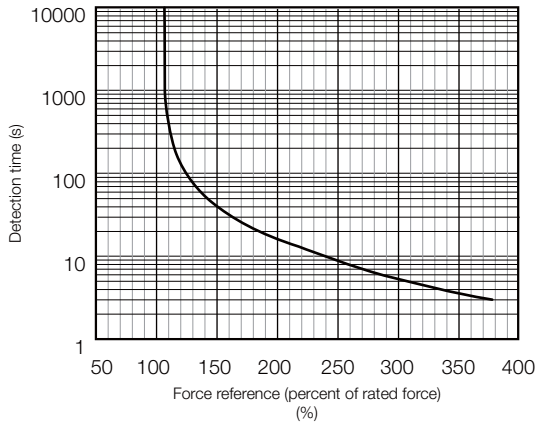

Note: The above overload protection characteristics do not mean that you can perform continuous duty operation with an output of 100% or higher. Use the Servomotor so that the effective force remains within the continuous duty zone given in Force-Motor Speed Characteristics on page 245.

External Dimensions

SGLFW2-30

◆ Moving Coil with Polarity Sensor: SGLFW2-30A070AS

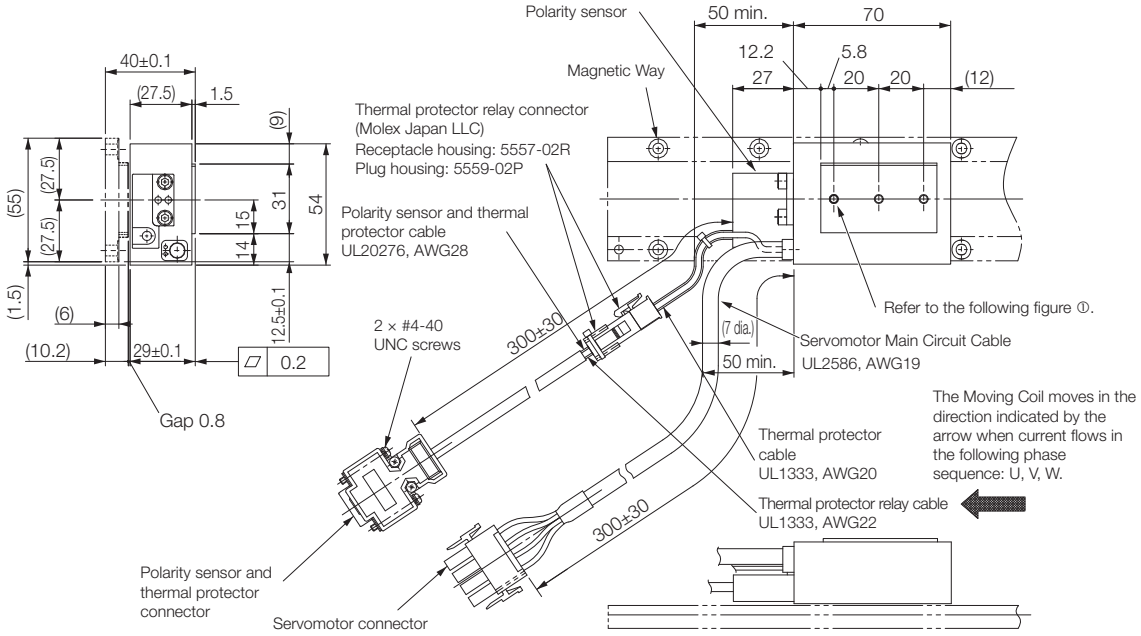

①SGLFW2-30A070AS

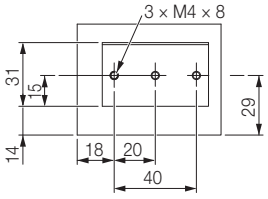

Approx. mass: 0.5 kg

Unit: mm

■ Connector Specifications

• Servomotor Connector

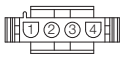

1	Phase U	Red
2	Phase V	White
3	Phase W	Black
4	FG	Green

Plug: 350779-1
Pins: 350218-3 or 350547-3 (No.1 to 3)
350654-1 or 350669-1 (No. 4)
From Tyco Electronics Japan G.K.

Mating Connector

Cap: 350780-1
Socket: 350536-3 or 350550-3

• Polarity Sensor and Thermal Protector Connector

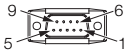

1	+5 V (thermal protector), +5 V (power supply)		
2	Su	**6**	Not used
3	Sv	**7**	
4	Sw	**8**	
5	0 V (power supply)	**9**	Thermal protector

Pin connector: 17JE-23090-02 (D8C) -CG
From DDK Ltd.

Mating Connector

Socket connector: 17JE-13090-02 (D8C) A-CG
Studs: 17L-002C or 17L-002C1

■ Polarity Sensor Output Signal

The figure on the right shows the relationship between the Su, Sv, and Sw polarity sensor output signals and the inverse power of each motor phase Vu, Vv, and Vw when the Moving Coil moves in the direction indicated by the arrow in the dimensional drawings of the Moving Coil.

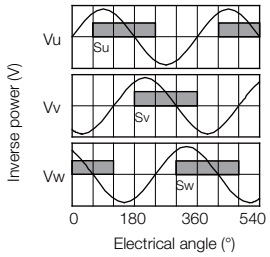

◆ Moving Coils with Polarity Sensors: SGLFW2-30A□□□AS

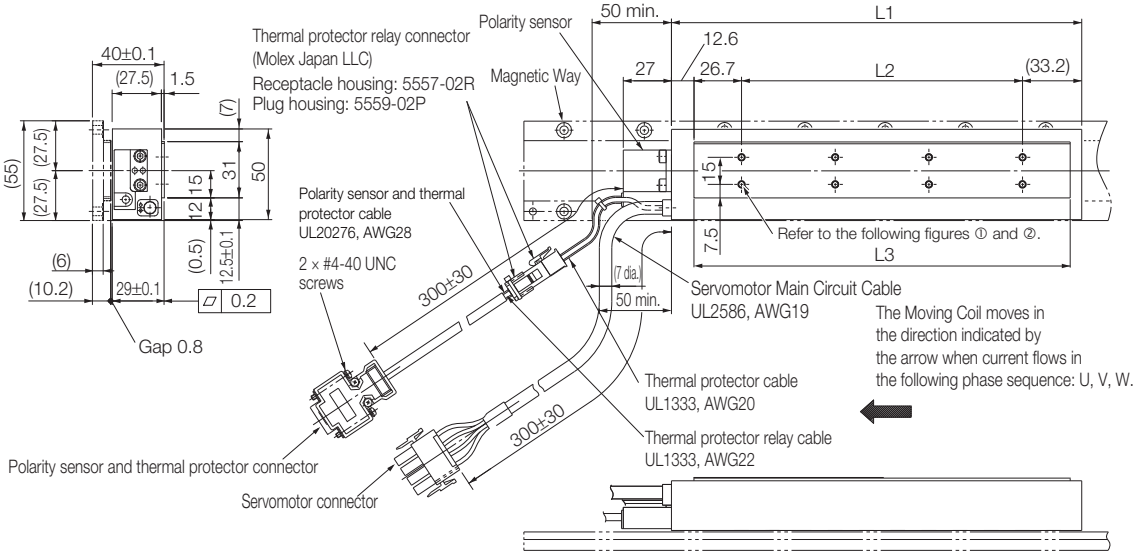

①SGLFW2-30A120AS

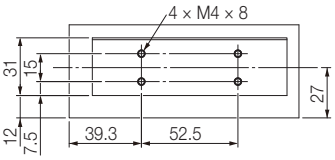

②SGLFW2-30A230AS

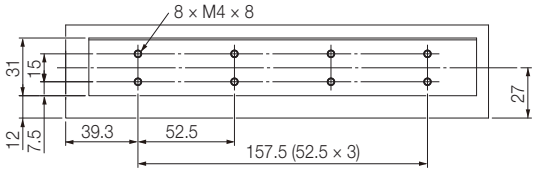

Unit: mm

Moving Coil Model SGLFW2-	L1	L2	L3	Approx. Mass [kg]
30A120AS	125	52.5	105.9	0.9
30A230AS	230	157.5	210.9	1.7

■ Connector Specifications

• Servomotor Connector

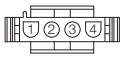

1	Phase U	Red
2	Phase V	White
3	Phase W	Black
4	FG	Green

Plug: 350779-1
Pins: 350218-3 or 350547-3 (No.1 to 3)
350654-1 or 350669-1 (No. 4)
From Tyco Electronics Japan G.K.

Mating Connector
Cap: 350780-1
Socket: 350536-3 or 350550-3

• Polarity Sensor and Thermal Protector Connector

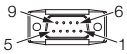

1	+5 V (thermal protector), +5 V (power supply)		
2	Su	**6**	Not used
3	Sv	**7**	
4	Sw	**8**	
5	0 V (power supply)	**9**	Thermal protector

Pin connector: 17JE-23090-02 (D8C) -CG
From DDK Ltd.

Mating Connector
Socket connector: 17JE-13090-02 (D8C) A-CG
Studs: 17L-002C or 17L-002C1

■ Polarity Sensor Output Signal

The figure on the right shows the relationship between the Su, Sv, and Sw polarity sensor output signals and the inverse power of each motor phase Vu, Vv, and Vw when the Moving Coil moves in the direction indicated by the arrow in the dimensional drawings of the Moving Coil.

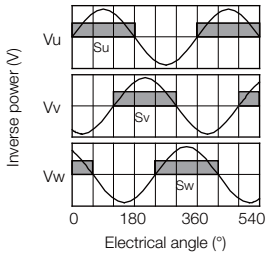

◆ Moving Coil without Polarity Sensor: SGLFW2-30A070AT

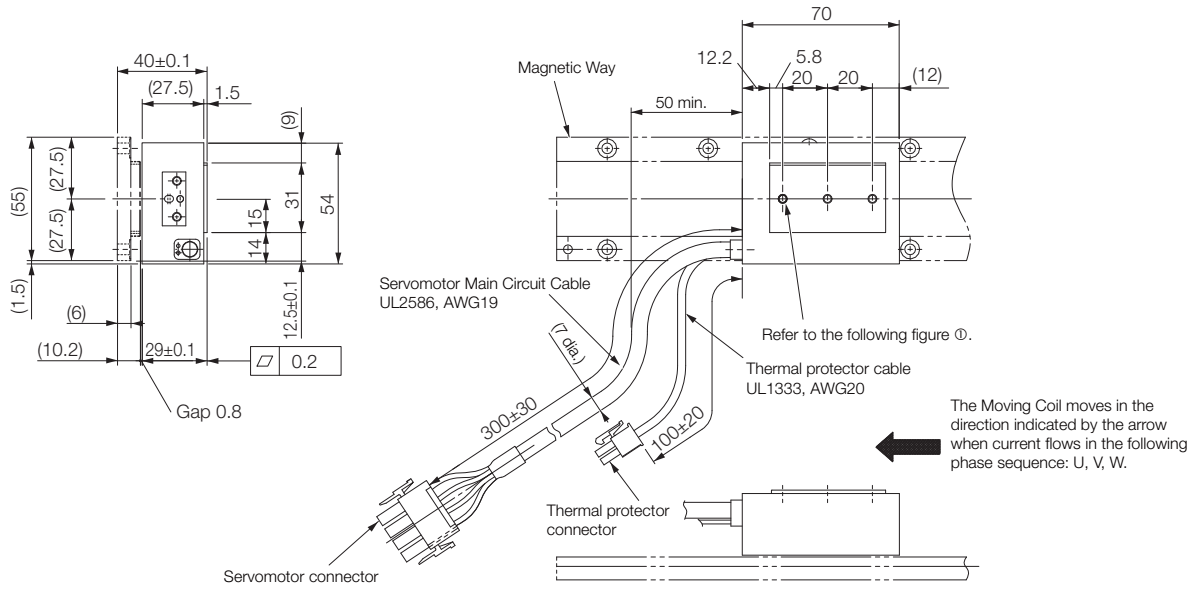

①SGLFW2-30A070AT

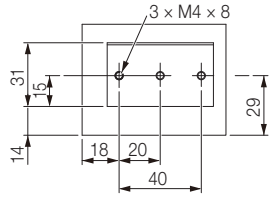

Approx. mass: 0.5 kg

Unit: mm

■ Connector Specifications

• Servomotor Connector

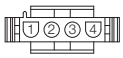

1	Phase U	Red
2	Phase V	White
3	Phase W	Black
4	FG	Green

Plug: 350779-1
Pins: 350218-3 or 350547-3 (No.1 to 3)
350654-1 or 350669-1 (No. 4)
From Tyco Electronics Japan G.K.

Mating Connector
Cap: 350780-1
Socket: 350536-3 or 350550-3

• Thermal Protector Connector

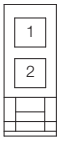

1	Thermal protector
2	Thermal protector

Receptacle housing: 5557-02R
Terminals: 5556T or 5556TL
From Molex Japan LLC

Mating Connector
Plug housing: 5559-02P
Terminals: 5558T or 5558TL

◆ Moving Coils without Polarity Sensors: SGLFW2-30A□□□AT

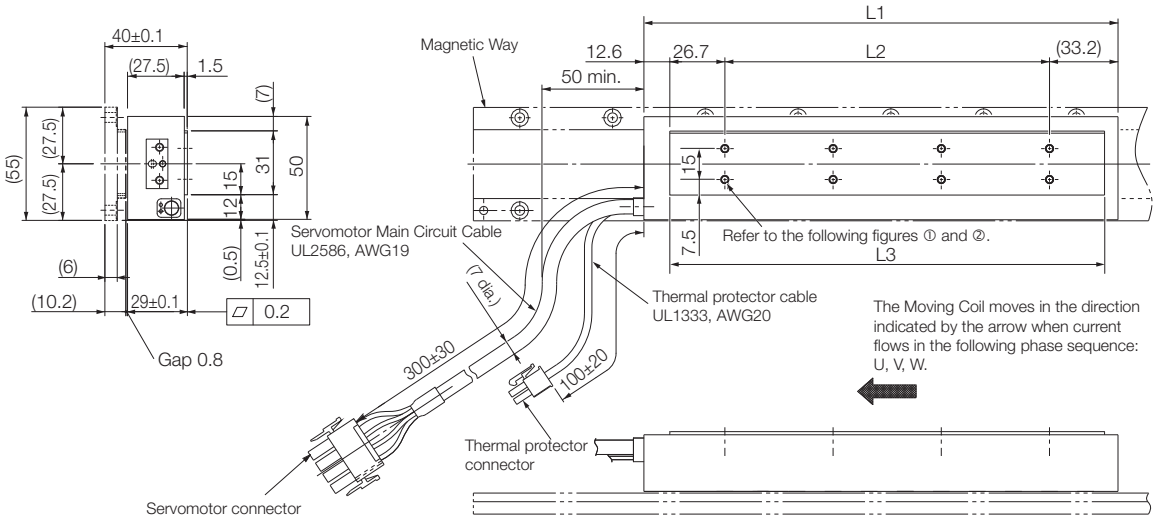

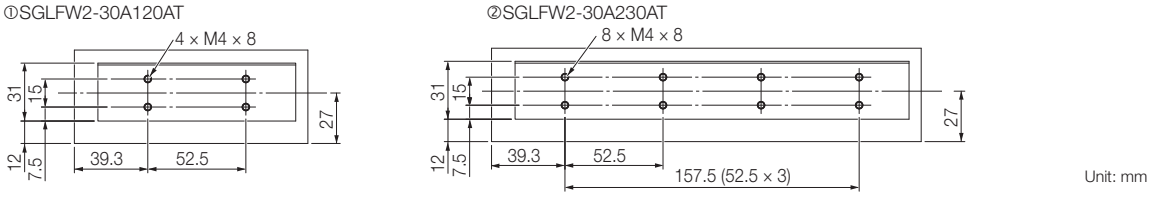

Unit: mm

Moving Coil Model SGLFW2-	L1	L2	L3	Approx. Mass [kg]
30A120AT	125	52.5	105.9	0.9
30A230AT	230	157.5	210.9	1.7

■ Connector Specifications

• Servomotor Connector

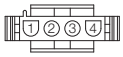

1	Phase U	Red
2	Phase V	White
3	Phase W	Black
4	FG	Green

Plug: 350779-1
Pins: 350218-3 or 350547-3 (No.1 to 3)
350654-1 or 350669-1 (No. 4)
From Tyco Electronics Japan G.K.

Mating Connector
Cap: 350780-1
Socket: 350536-3 or 350550-3

• Thermal Protector Connector

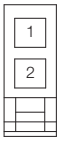

1	Thermal protector
2	Thermal protector

Receptacle housing: 5557-02R
Terminals: 5556T or 5556TL
From Molex Japan LLC

Mating Connector
Plug housing: 5559-02P
Terminals: 5558T or 5558TL

◆ Magnetic Ways: SGLFM2-30□□□A

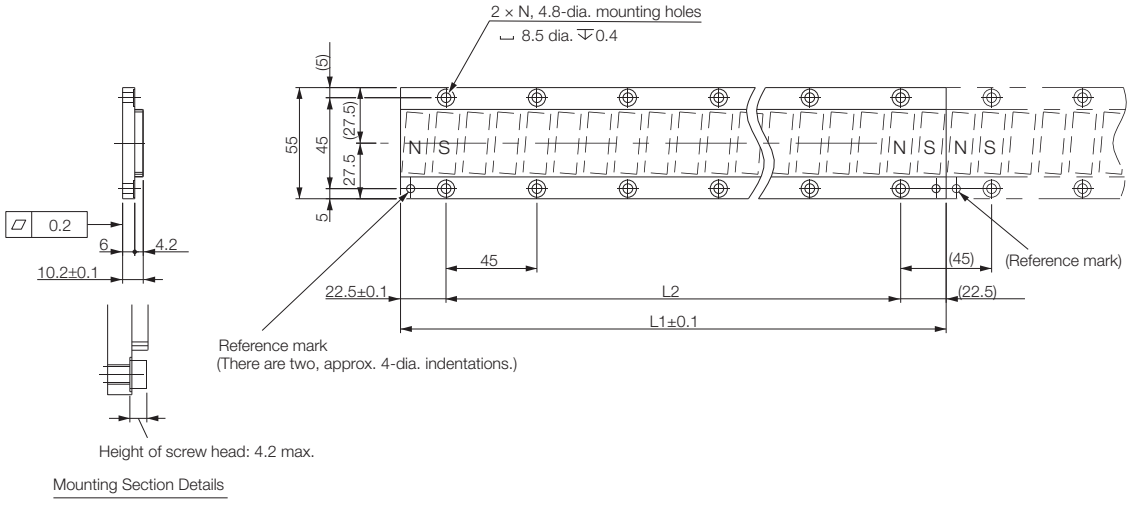

Unit: mm

Note: More than one Magnetic Way can be connected. Connect the Magnetic Ways so that the reference marks on them are aligned in the same direction as shown in the figure.

Magnetic Way Model SGLFM2-	L1 ± 0.1	L2	N	Approx. Mass [kg]
30270A	270	225 (45 × 5)	6	0.9
30450A	450	405 (45 × 9)	10	1.5
30630A	630	585 (45 × 13)	14	2.0

SGLFW2-45

◆ Moving Coils with Polarity Sensors: SGLFW2-45A□□□AS

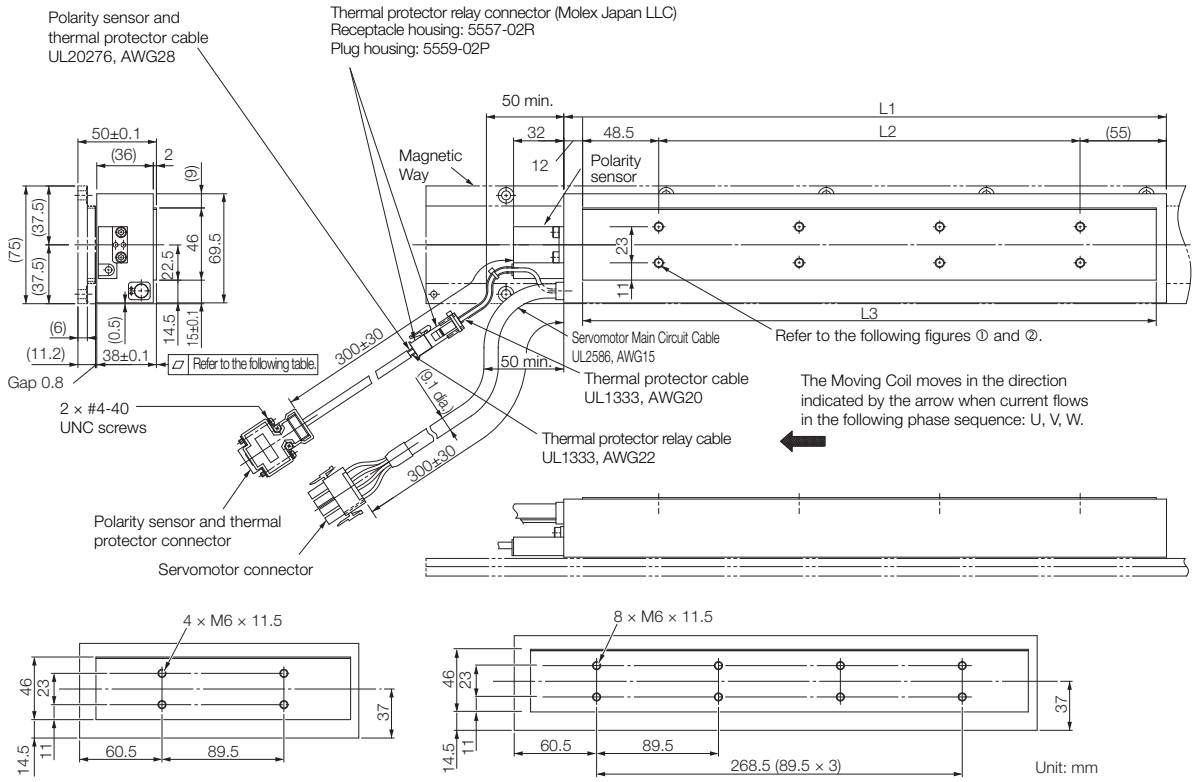

Moving Coil Model SGLFW2-	L1	L2	L3	Flatness	Approx. Mass [kg]
45A200AS	205	89.5	187	0.2	2.9
45A380AS	384	268.5	365.5	0.3	5.5

■ Connector Specifications

• Servomotor Connector

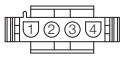

1	Phase U	Red
2	Phase V	White
3	Phase W	Black
4	FG	Green

Plug: 350779-1
Pins: 350218-3 or 350547-3 (No.1 to 3)
350654-1 or 350669-1 (No. 4)
From Tyco Electronics Japan G.K.

Mating Connector
Cap: 350780-1
Socket: 350536-3 or 350550-3

• Polarity Sensor and Thermal Protector Connector

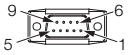

1	+5 V (thermal protector), +5 V (power supply)		
2	Su	**6**	Not used
3	Sv	**7**	
4	Sw	**8**	
5	0 V (power supply)	**9**	Thermal protector

Pin connector: 17JE-23090-02 (D8C) -CG
From DDK Ltd.

Mating Connector
Socket connector: 17JE-13090-02 (D8C) A-CG
Studs: 17L-002C or 17L-002C1

■ Polarity Sensor Output Signal

The figure on the right shows the relationship between the Su, Sv, and Sw polarity sensor output signals and the inverse power of each motor phase Vu, Vv, and Vw when the Moving Coil moves in the direction indicated by the arrow in the dimensional drawings of the Moving Coil.

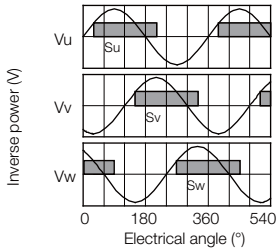

◆ Moving Coils without Polarity Sensors: SGLFW2-45A□□□AT

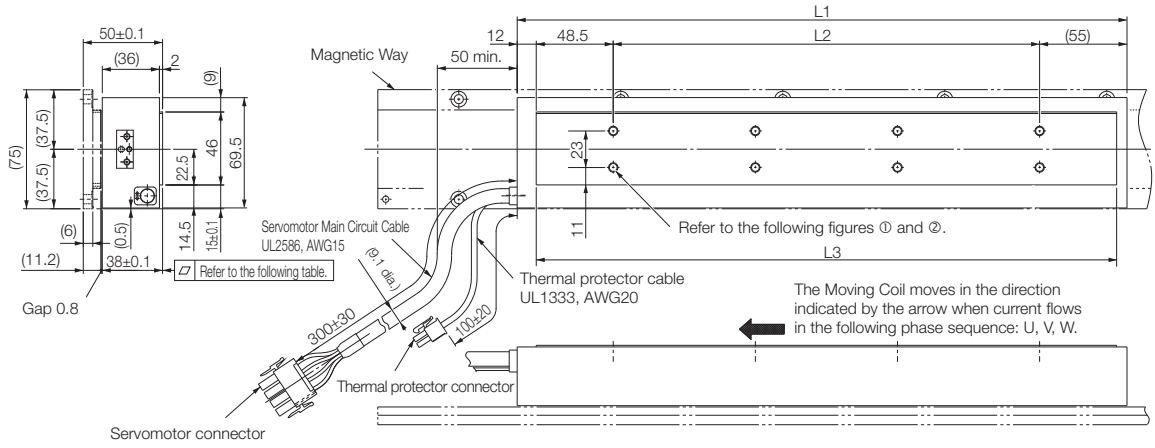

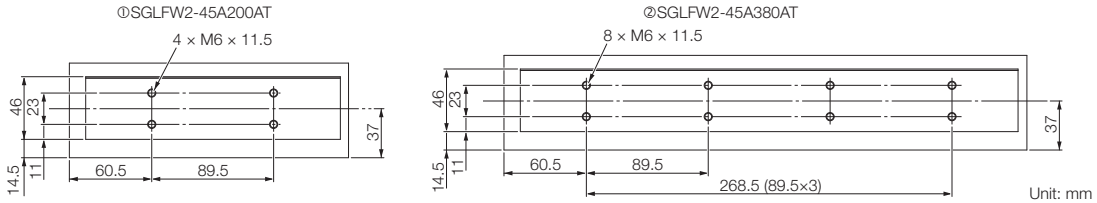

Moving Coil Model SGLFW2-	L1	L2	L3	Flatness	Approx. Mass [kg]
45A200AT	205	89.5	187	0.2	2.9
45A380AT	384	268.5	365.5	0.3	5.5

■ Connector Specifications

- **Servomotor Connector**

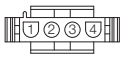

1	Phase U	Red
2	Phase V	White
3	Phase W	Black
4	FG	Green

Plug: 350779-1
Pins: 350218-3 or 350547-3 (No.1 to 3)
350654-1 or 350669-1 (No. 4)
From Tyco Electronics Japan G.K.

Mating Connector
Cap: 350780-1
Socket: 350536-3 or 350550-3

- **Thermal Protector Connector**

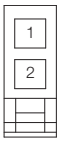

1	Thermal protector
2	Thermal protector

Receptacle housing: 5557-02R
Terminals: 5556T or 5556TL
From Molex Japan LLC

Mating Connector
Plug housing: 5559-02P
Terminals: 5558T or 5558TL

◆ Magnetic Ways: SGLFM2-45□□□A

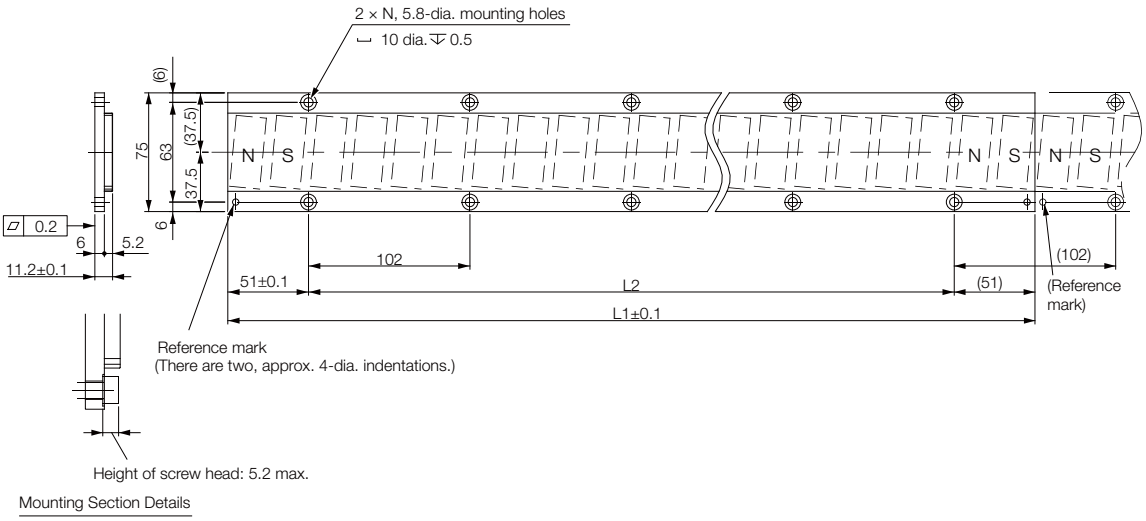

Unit: mm

Note: More than one Magnetic Way can be connected. Connect the Magnetic Ways so that the reference marks on them are aligned in the same direction as shown in the figure.

Magnetic Way Model SGLFM2-	L1 ± 0.1	L2	N	Approx. Mass [kg]
45306A	306	204 (102 × 2)	3	1.5
45510A	510	408 (102 × 4)	5	2.5
45714A	714	612 (102 × 6)	7	3.4

SGLFW2-90

◆ Moving Coils with Polarity Sensors: SGLFW2-90A□□□AS

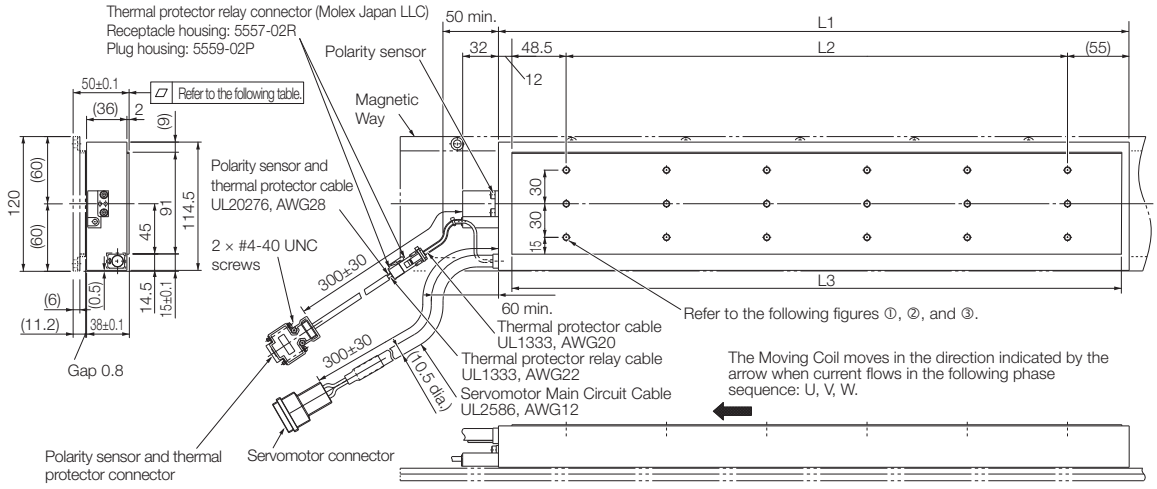

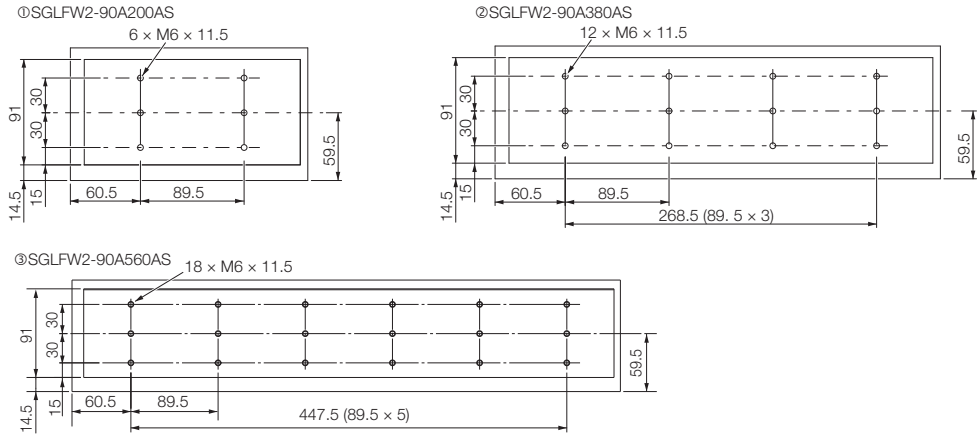

Unit: mm

Moving Coil Model SGLFW2-	L1	L2	L3	Flatness	Approx. Mass [kg]
90A200AS	205	89.5	187	0.2	5.3
90A380AS	384	268.5	365.5	0.3	10.1
90A560AS	563	447.5	544	0.3	14.9

■ Connector Specifications

• Servomotor Connector

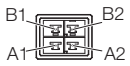

A1	Phase U	Red
A2	Phase V	White
B1	Phase W	Black
B2	FG	Green

Tab housing: 1-917808-2
Contacts: 917803-2 (A1, A2, and B1)
84695-1 (B2)
From Tyco Electronics Japan G.K.

Mating Connector
Receptacle housing: 1-917807-2
Contacts: 179956-2

• Polarity Sensor and Thermal Protector Connector

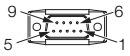

1	+5 V (thermal protector), +5 V (power supply)		
2	Su	**6**	Not used
3	Sv	**7**	
4	Sw	**8**	
5	0 V (power supply)	**9**	Thermal protector

Pin connector: 17JE-23090-02 (D8C) -CG
From DDK Ltd.

Mating Connector
Socket connector: 17JE-13090-02 (D8C) A-CG
Studs: 17L-002C or 17L-002C1

■ Polarity Sensor Output Signal

The figure on the right shows the relationship between the Su, Sv, and Sw polarity sensor output signals and the inverse power of each motor phase Vu, Vv, and Vw when the Moving Coil moves in the direction indicated by the arrow in the dimensional drawings of the Moving Coil.

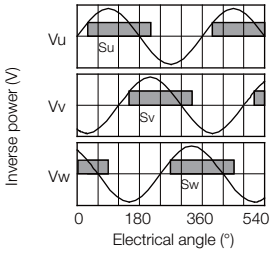

◆ Moving Coils without Polarity Sensors: SGLFW2-90A□□□AT

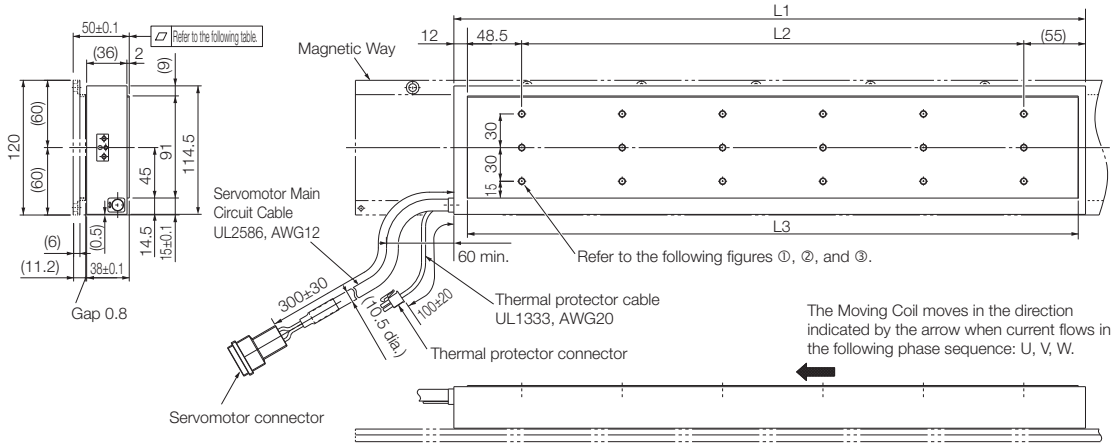

①SGLFW2-90A200AT

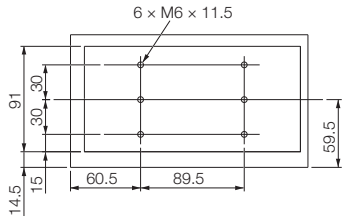

②SGLFW2-90A380AT

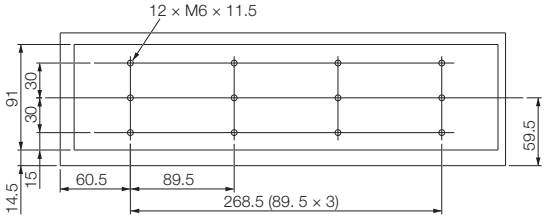

③SGLFW2-90A560AT

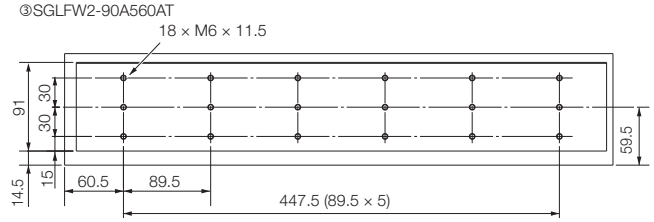

Unit: mm

Moving Coil Model SGLFW2-	L1	L2	L3	Flatness	Approx. Mass [kg]
90A200AT	205	89.5	187	0.2	5.3
90A380AT	384	268.5	365.5	0.3	10.1
90A560AT	563	447.5	544	0.3	14.9

■ Connector Specifications

• Servomotor Connector



A1	Phase U	Red
A2	Phase V	White
B1	Phase W	Black
B2	FG	Green

Tab housing: 1-917808-2
Contacts: 917803-2 (A1, A2, and B1)
84695-1 (B2)
From Tyco Electronics Japan G.K.

Mating Connector
Receptacle housing: 1-917807-2
Contacts: 179956-2

• Thermal Protector Connector

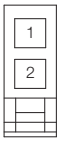

1	Thermal protector
2	Thermal protector

Receptacle housing: 5557-02R
Terminals: 5556T or 5556TL
From Molex Japan LLC

Mating Connector
Plug housing: 5559-02P
Terminals: 5558T or 5558TL

◆ Magnetic Ways: SGLFM2-90□□□A

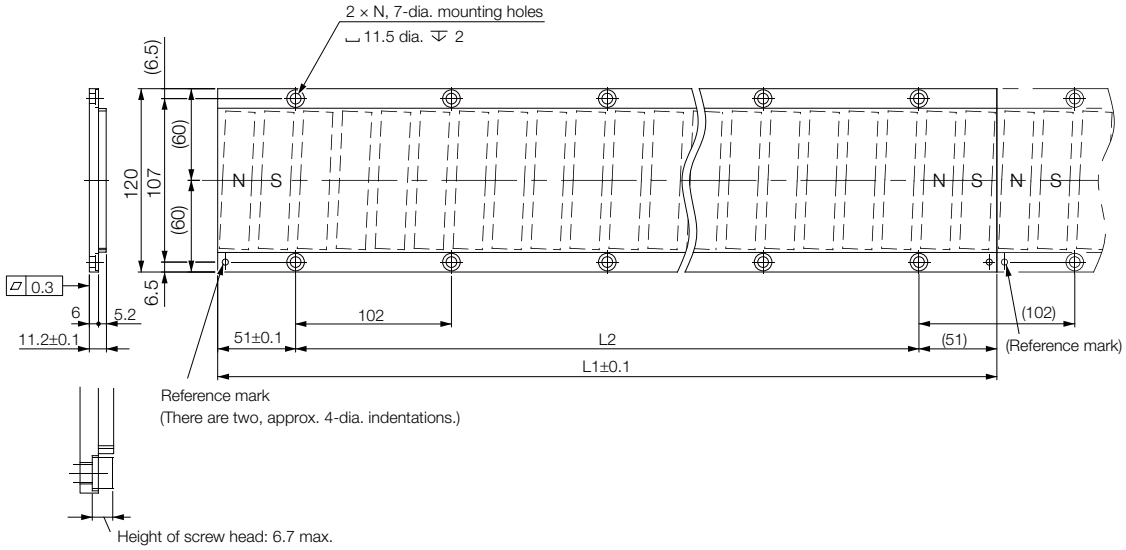

Mounting Section Details

Unit: mm

Note: More than one Magnetic Way can be connected. Connect the Magnetic Ways so that the reference marks on them are aligned in the same direction as shown in the figure.

Magnetic Way Model SGLFM2-	L1±0.1	L2	N	Approx. Mass [kg]
90306A	306	204 (102 × 2)	3	2.6
90510A	510	408 (102 × 4)	5	4.2
90714A	714	612 (102 × 6)	7	5.9

SGLFW2-1D

◆ Moving Coil with Polarity Sensor: SGLFW2-1DA□□□AS

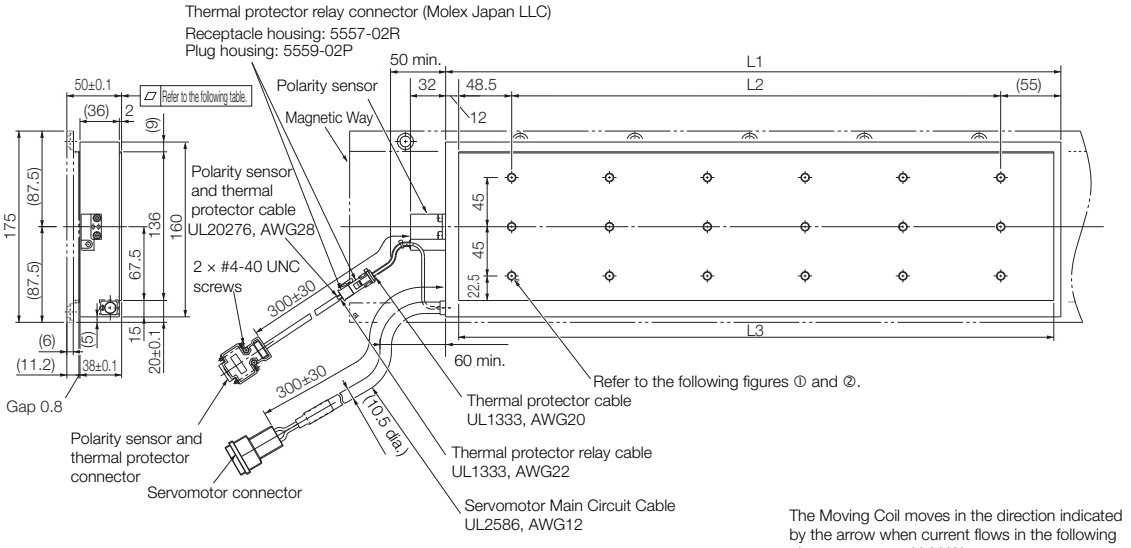

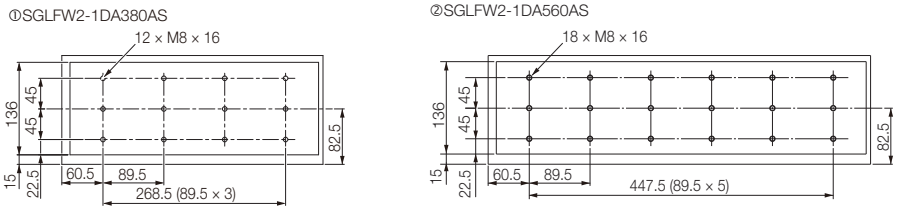

Unit: mm

Moving Coil Model SGLFW2-	L1	L2	L3	Flatness	Approx. Mass [kg]
1DA380AS	384	268.5	365.5	0.3	14.6
1DA560AS	563	447.5	544	0.3	21.5

■ Connector Specifications

• Servomotor Connector



A1	Phase U	Red
A2	Phase V	White
B1	Phase W	Black
B2	FG	Green

Tab housing: 1-917808-2
Contacts: 917803-2 (A1, A2, and B1)
84695-1 (B2)
From Tyco Electronics Japan G.K.

Mating Connector

Receptacle housing: 1-917807-2
Contacts: 179956-2

• Polarity Sensor and Thermal Protector Connector

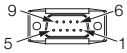

1	+5 V (thermal protector), +5 V (power supply)		
2	Su	**6**	Not used
3	Sv	**7**	
4	Sw	**8**	
5	0 V (power supply)	**9**	Thermal protector

Pin connector: 17JE-23090-02 (D8C) -CG
From DDK Ltd.

Mating Connector

Socket connector: 17JE-13090-02 (D8C) A-CG
Studs: 17L-002C or 17L-002C1

■ Polarity Sensor Output Signal

The figure on the right shows the relationship between the Su, Sv, and Sw polarity sensor output signals and the inverse power of each motor phase Vu, Vv, and Vw when the Moving Coil moves in the direction indicated by the arrow in the dimensional drawings of the Moving Coil.

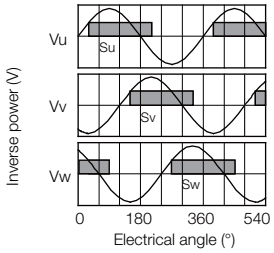

◆ Moving Coil without Polarity Sensor: SGLFW2-1DA□□□AT

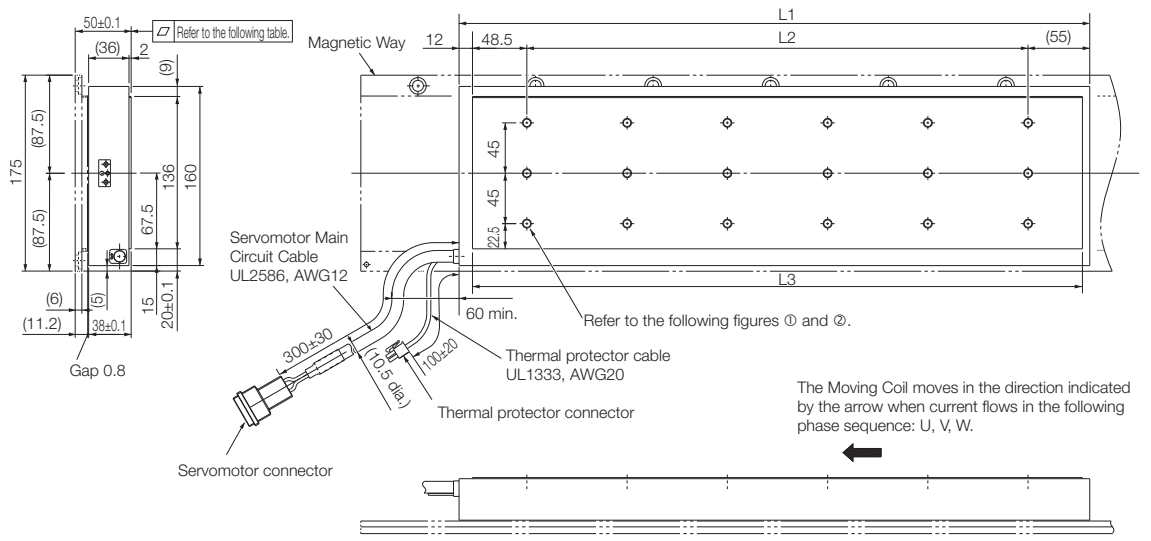

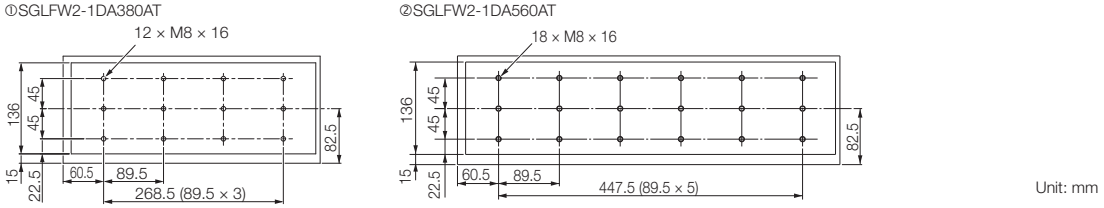

Unit: mm

Moving Coil Model SGLFW2-	L1	L2	L3	Flatness	Approx. Mass [kg]
1DA380AT	384	268.5	365.5	0.3	14.6
1DA560AT	563	447.5	544	0.3	21.5

■ Connector Specifications

• Servomotor Connector

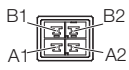

A1	Phase U	Red
A2	Phase V	White
B1	Phase W	Black
B2	FG	Green

Tab housing: 1-917808-2
Contacts: 917803-2 (A1, A2, and B1)
84695-1 (B2)
From Tyco Electronics Japan G.K.

Mating Connector
Receptacle housing: 1-917807-2
Contacts: 179956-2

• Thermal Protector Connector

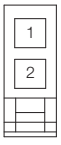

1	Thermal protector
2	Thermal protector

Receptacle housing: 5557-02R
Terminals: 5556T or 5556TL
From Molex Japan LLC

Mating Connector
Plug housing: 5559-02P
Terminals: 5558T or 5558TL

◆ Magnetic Ways: SGLFM2-1D□□□A

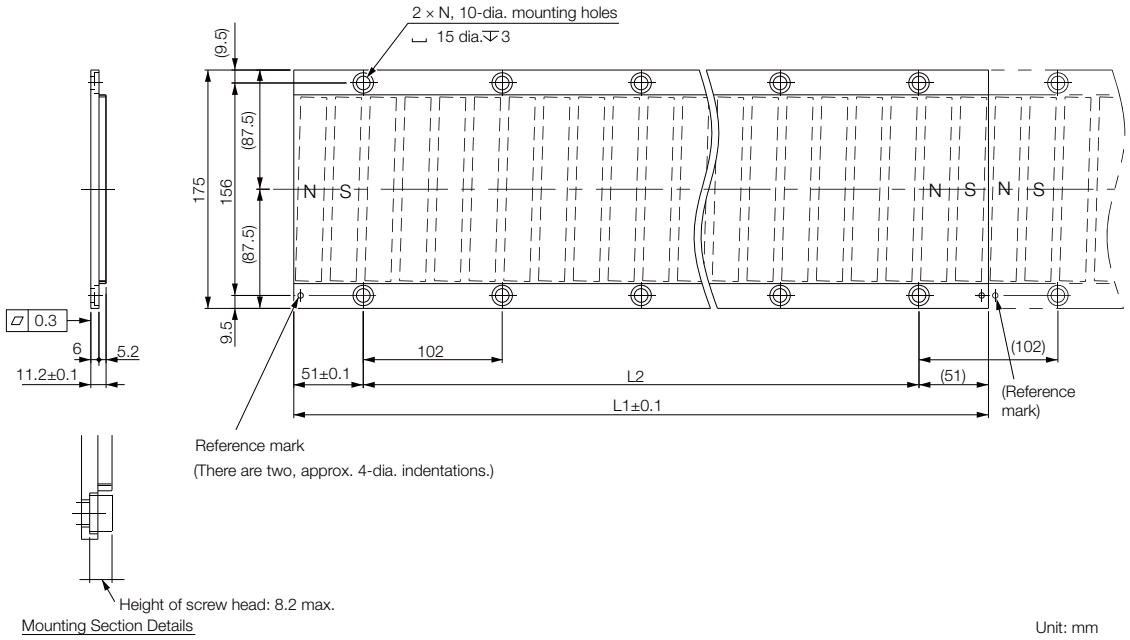

Note: More than one Magnetic Way can be connected. Connect the Magnetic Ways so that the reference marks on them are aligned in the same direction as shown in the figure.

Magnetic Way Model SGLFM2-	L1±0.1	L2	N	Approx. Mass [kg]
1D306A	306	204 (102 × 2)	3	3.7
1D510A	510	408 (102 × 4)	5	6.2
1D714A	714	612 (102 × 6)	7	8.6

Selecting Cables

◆ Cable Configurations

To select a Linear Encoder, use Recommended Linear Encoders (pages 306 and 307). Prepare the cable required for the encoder.

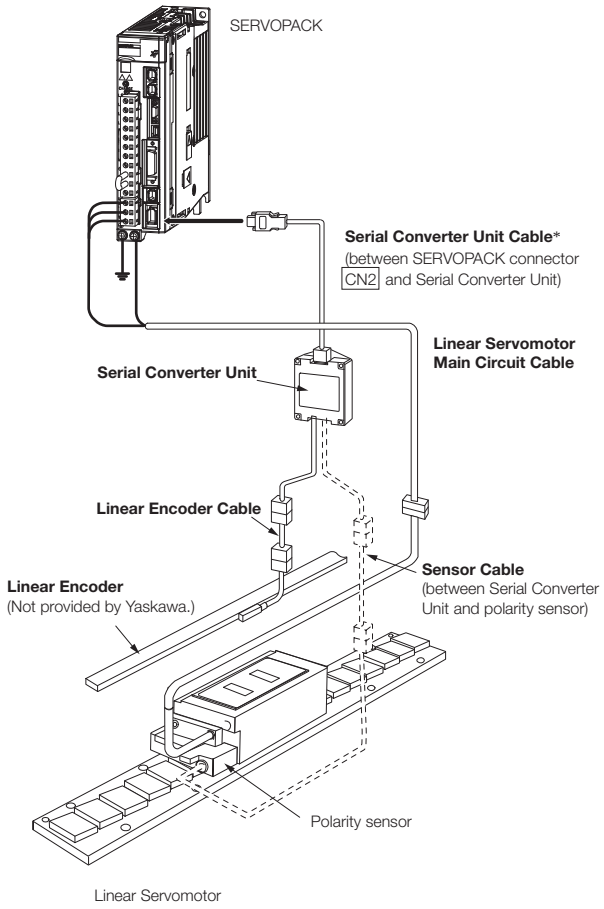

* You can connect directly to an absolute linear encoder.

Note: Refer to the following manual for the following information.

- Cable dimensional drawings and cable connection specifications
- Order numbers and specifications of individual connectors for cables
- Order numbers and specifications for wiring materials

📖 **Σ-7-Series AC Servo Drive Peripheral Device Selection Manual (Manual No.: SIEP S800001 32)**

◆ Linear Servomotor Main Circuit Cables

Linear Servomotor Model	Length (L)	Order Number	Appearance
SGLFW2-30A070A□ SGLFW2-30A120A□ SGLFW2-30A230A□	1 m	JZSP-CL2N703-01-E	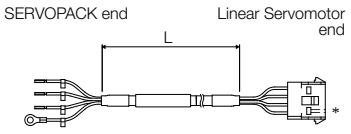
	3 m	JZSP-CL2N703-03-E	
	5 m	JZSP-CL2N703-05-E	
	10 m	JZSP-CL2N703-10-E	
	15 m	JZSP-CL2N703-15-E	
	20 m	JZSP-CL2N703-20-E	
SGLFW2-45A200A□ SGLFW2-45A380A□	1 m	JZSP-CL2N603-01-E	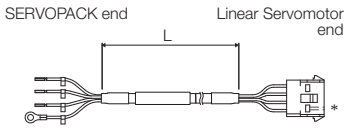
	3 m	JZSP-CL2N603-03-E	
	5 m	JZSP-CL2N603-05-E	
	10 m	JZSP-CL2N603-10-E	
	15 m	JZSP-CL2N603-15-E	
	20 m	JZSP-CL2N603-20-E	
SGLFW2-90A200A□ SGLFW2-90A380A□	1 m	JZSP-CL2N803-01-E	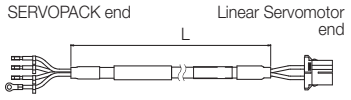
	3 m	JZSP-CL2N803-03-E	
	5 m	JZSP-CL2N803-05-E	
	10 m	JZSP-CL2N803-10-E	
	15 m	JZSP-CL2N803-15-E	
	20 m	JZSP-CL2N803-20-E	
SGLFW2-90A560A□ SGLFW2-1DA380A□ SGLFW2-1DA560A□	1 m	JZSP-CL2N503-01-E	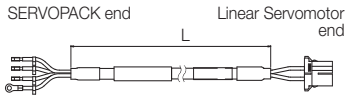
	3 m	JZSP-CL2N503-03-E	
	5 m	JZSP-CL2N503-05-E	
	10 m	JZSP-CL2N503-10-E	
	15 m	JZSP-CL2N503-15-E	
	20 m	JZSP-CL2N503-20-E	

* Connector from Tyco Electronics Japan G.K.

Note: Estimates are available for models other than those listed above (SGLFW2-90A□□□A□L and SGLFW2-1D□□□A□L).

SGLFW2 (Models with F-type Iron Cores, 400V)

Model Designations

◆ Moving Coil

S G L F W 2 - 30 A 070 A S □ E

Linear Σ Series Linear Servomotors | 1st digit | 2nd digit | 3rd+4th digits | 5th digit | 6th+7th+8th digits | 9th digit | 10th digit | 11th digit | 12th digit

1st digit Servomotor Type

Code	Specification
F	With F-type iron core

2nd digit Moving Coil/Magnetic Way

Code	Specification
W2	Moving Coil

3rd+4th digits Magnet Height

Code	Specification
30	30 mm
45	45 mm
90	90 mm
1D	135 mm

5th digit Power Supply Voltage

Code	Specification
D	400 VAC

6th+7th+8th digits Length of Moving Coil

Code	Specification
070	70 mm
120	125 mm
200	205 mm
230	230 mm
380	384 mm
560	563 mm

9th digit Design Revision Order

A

10th digit Sensor Specification

Code	Specification
S	With polarity sensor and Thermal Protector
T	Without polarity sensor, with thermal protector

11th digit Cooling Method

Code	Specification
1	Self-cooled
L	Water-cooled*

11th digit Cooling Method

Code	Specification
E	Metal round connector (Phoenix)

■ Non Stock Items

Note: This information is provided to explain model numbers. It is not meant to imply that models are available for all combinations of codes.

* Contact your Yaskawa representative for information on water-cooled models.

◆ Magnetic Way

S G L F M 2 - 30 270 A

Linear Σ Series Linear Servomotors | 1st digit | 2nd digit | 3rd+4th digits | 5th+6th+7th digits | 8th digit

1st digit Servomotor Type

(Same as for the Moving Coil.)

2nd digit Moving Coil/Magnetic Way

Code	Specification
M2	Magnetic Way

3rd+4th digits Magnet Height

(Same as for the Moving Coil.)

5th+6th+7th digits Length of Magnetic Way

Code	Specification
270	270 mm
306	306 mm
450	450 mm
510	510 mm
630	630 mm
714	714 mm

8th digit Design Revision Order

A

Precautions on Moving Coils with Polarity Sensors

Note

When you use a Moving Coil with a Polarity Sensor, the Magnetic Way must cover the bottom of the polarity sensor. Refer to the example that shows the correct installation.
When determining the length of the Moving Coil's stroke or the length of the Magnetic Way, consider the total length (L) of the Moving Coil and the polarity sensor. Refer to the following table.

Correct Installation

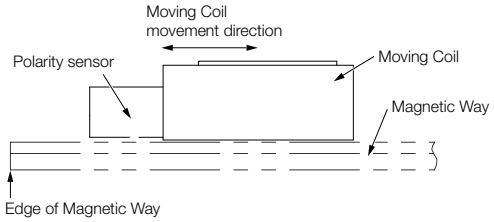

Incorrect Installation

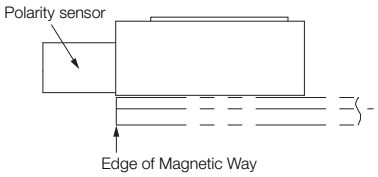

◆ Total Length of Moving Coil with Polarity Sensor

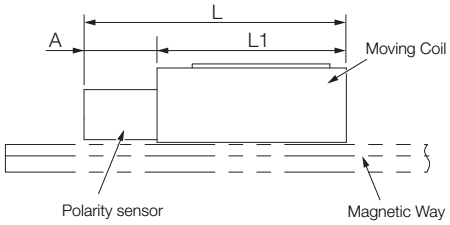

Moving Coil Model SGLFW2-	Length of Moving Coil, L1 [mm]	Length of Polarity Sensor, A [mm]	Total Length, L [mm]
30D070AS	70	27	97
30D120AS	125		152
30D230AS	230		257
45D200AS	205	32	237
45D380AS	384		416
90D200AS	205		237
90D380AS	384		416

Specifications and Ratings

Specifications

Linear Servomotor Moving Coil Model SGLFW2-		30D			45D		90D		1DD	
		070A□	120A□	230A□	200A□	380A□	200A□	380A□	380A□	560A□
Time Rating		Continuous								
Thermal Class		B								
Insulation Resistance		500 VDC, 10 MΩ min.								
Withstand Voltage		1,500 VAC for 1 minute								
Excitation		Permanent magnet								
Cooling Method		Self-cooled and water-cooled*								
Protective Structure		IP00								
Environmental Conditions	Surrounding Air Temperature	0°C to 40°C (with no freezing)								
	Surrounding Air Humidity	20% to 80% relative humidity (with no condensation)								
	Installation Site	• Must be indoors and free of corrosive and explosive gases. • Must be well-ventilated and free of dust and moisture. • Must facilitate inspection and cleaning. • Must have an altitude of 1,000 m or less. • Must be free of strong magnetic fields.								
Shock Resistance	Impact Acceleration Rate	196 m/s^2								
	Number of Impacts	2 times								
Vibration Resistance	Vibration Acceleration Rate	49 m/s^2 (the vibration resistance in three directions, vertical, side-to-side, and front-to-back)								

* Contact your Yaskawa representative for information on water-cooled models.

Ratings

Linear Servomotor Moving Coil Model SGLFW2-			30D			45D		
			070A□	120A□	230A□	200A□	380A□	
Rated Motor Speed (Reference Speed during Speed Control)*1		m/s	4.0	4.0	4.0	4.0	4.0	
Maximum Speed*1		m/s	5.0	5.0	5.0	4.5	4.5	
Rated Force*1, *2		N	45	90	180	280	560	
Maximum Force*1		N	135	270	540	840	1500	1680
Rated Current*1		Arms	1.4	1.5	1.5	2.2	4.3	
Maximum Current*1		Arms	5.3	5.2	5.1	8.1	13.6	16.2
Moving Coil Mass		kg	0.50	0.90	1.7	2.9	5.4	
Force Constant		N/Arms	33.3	64.5	129.0	137.0	136.7	
BEMF Constant		Vrms/(m/s)/phase	11.1	21.5	43	45.6	45.6	
Motor Constant		N/$\sqrt{W}$	11.3	17.3	24.4	37.9	53.2	
Electrical Time Constant		ms	7.6	7.3	7.3	20	19.6	
Mechanical Time Constant		ms	3.9	3.0	2.9	2.1	1.9	
Thermal Resistance (with Heat Sink)		K/W	2.62	1.17	0.79	0.60	0.44	
Thermal Resistance (without Heat Sink)		K/W	11.3	4.43	2.55	2.64	1.49	
Magnetic Attraction		N	200	630	1260	2120	4240	
Combined Magnetic Way, SGLFM2-			30□□□A			45□□□A		
Combined Serial Converter Unit, JZDP-□□□□-			651	652	653	654	655	
Applicable SERVOPACKs	SGD7S-		1R9D			3R5D	5R4D	8R4D
	SGD7W-		2R6D			2R6D	5R4D	–

*1. These values are for operation in combination with a SERVOPACK when the temperature of the armature winding is 100°C. The values for other items are at 20°C. These are typical values.

*2. The rated forces are the continuous allowable force values at a surrounding air temperature of 40°C with an aluminum heat sink of the dimensions given in the following table.

- Heat Sink Dimensions
  - 150 mm × 100 mm × 10 mm: SGLFW2-30D070A
  - 254 mm × 254 mm × 25 mm: SGLFW2-30D120A and -30D230A
  - 400 mm × 500 mm × 25 mm: SGLFW2-45D200A and -45D380A

Ratings

Linear Servomotor Moving Coil Model SGLFW2-		90D			1DD	
		200A□	380A□	560A□	380A□	560A□
Rated Motor Speed (Reference Speed during Speed Control)*1	m/s	4.0	4.0	4.0	3.5	3.5
Maximum Speed*1	m/s	4.0	4.0	4.0	3.5	3.5
Rated Force*1, *2	N	560	1120	1680	1680	2520
Maximum Force*1	N	1680	3360	5040	5040	7560
Rated Current*1	Arms	3.8	7.7	11.5	10.9	16.3
Maximum Current*1	Arms	14.0	28.0	42.0	39.7	59.6
Moving Coil Mass	kg	5.3	10.1	14.9	14.6	21.5
Force Constant	N/Arms	154.0	154.0	154.0	163.0	163.0
BEMF Constant	Vrms/(m/s)/phase	51.3	51.3	51.3	54.3	54.3
Motor Constant	$N/\sqrt{W}$	59.2	83.7	102	103	126
Electrical Time Constant	ms	24	24	24	25	25
Mechanical Time Constant	ms	1.5	1.4	1.4	1.4	1.3
Thermal Resistance (with Heat Sink)	K/W	0.45	0.21	0.18	0.18	0.12
Thermal Resistance (without Heat Sink)	K/W	1.81	1.03	0.72	0.79	0.55
Magnetic Attraction	N	4240	8480	12700	12700	19100
Combined Magnetic Way, SGLFM2-		90□□□A			1D□□□A	
Combined Serial Converter Unit, JZDP-□□□□-		657	658	659	660	661
Applicable SERVOPACKs	SGD7S-	120A	200A	330A	200A	330A

*1. These values are for operation in combination with a SERVOPACK when the temperature of the armature winding is 100°C. The values for other items are at 20°C. These are typical values.

*2. The rated forces are the continuous allowable force values at a surrounding air temperature of 40°C with an aluminum heat sink of the dimensions given in the following table.
- Heat Sink Dimensions
  - 400 mm × 500 mm × 25 mm: SGLFW2-90D200A
  - 609 mm × 762 mm × 40 mm: SGLFW2-90D380A
  - 900 mm × 762 mm × 40 mm: SGLFW2-90D560A and -1DD380A
  - 1,400 mm × 900 mm × 40 mm: SGLFW2-1DD560A

Force-Motor Speed Characteristics

A : Continuous duty zone ———— (solid lines): With three-phase 400-V input
B : Intermittent duty zone - - - - - - - - (dotted lines): With single-phase 400-V input

SGLFW2-30D070A

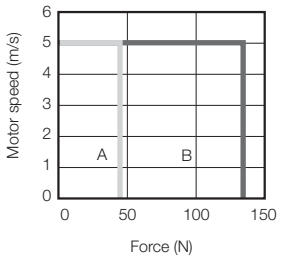

SGLFW2-30D120A

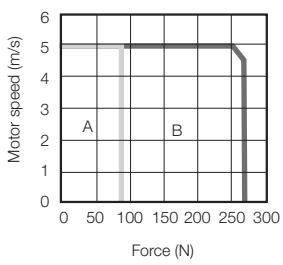

SGLFW2-30D230A

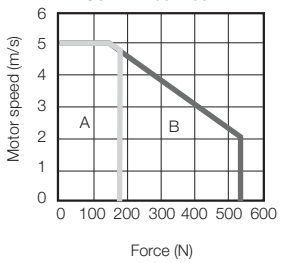

SGLFW2-45D200A

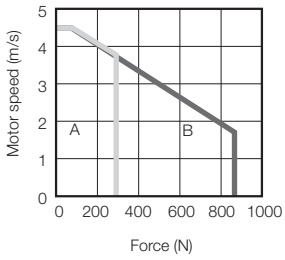

SGLFW2-45D380A
(Combined with SGD7S-8R4D)

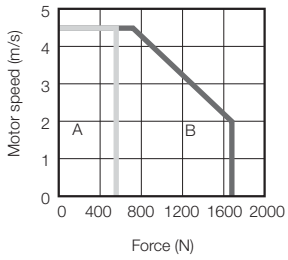

SGLFW2-45D380A
(Combined with SGD7S-5R4D)

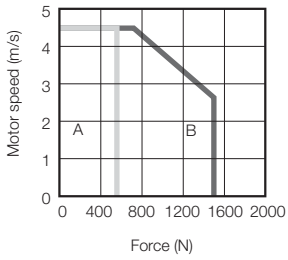

SGLFW2-90D200A

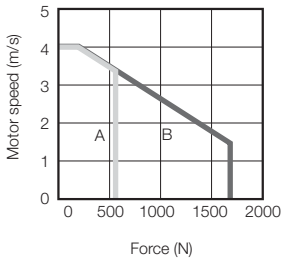

SGLFW2-90D380A

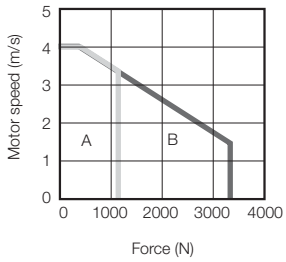

SGLFW2-90D560A

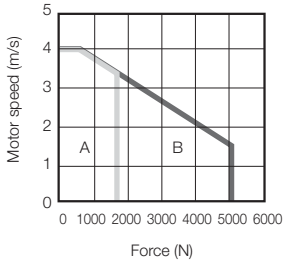

SGLFW2-1DD380A

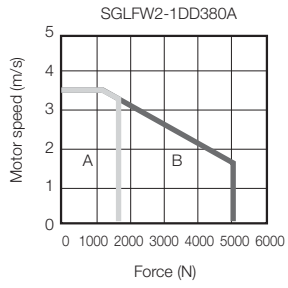

SGLFW2-1DD560A

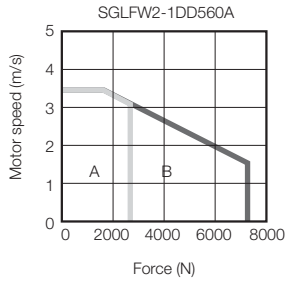

Note: 1. These values (typical values) are for operation in combination with a SERVOPACK when the temperature of the armature winding is 100°C.
2. The characteristics in the intermittent duty zone depend on the power supply voltage.
3. If the effective force is within the allowable range for the rated force, the Servomotor can be used within the intermittent duty zone.
4. If you use a Servomotor Main Circuit Cable that exceeds 20 m, the intermittent duty zone in the torque-motor speed characteristics will become smaller because the voltage drop increases.

Servomotor Overload Protection Characteristics

The overload detection level is set for hot start conditions with a Servomotor surrounding air temperature of 40°C.

SGLFW2-30D070A

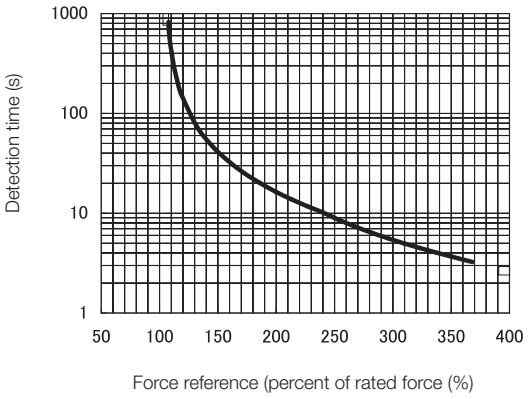

SGLFW2-30D120A and -230A

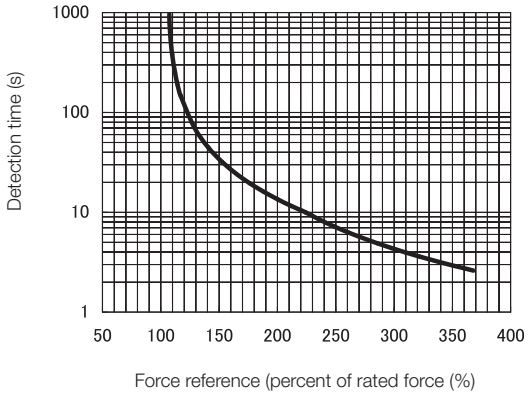

SGLFW2-45D, -90D, and -1DD

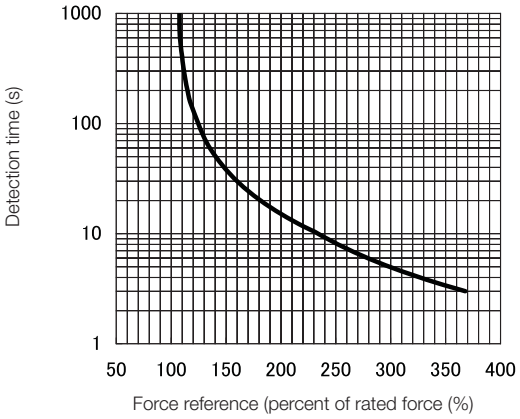

Note: The above overload protection characteristics do not mean that you can perform continuous duty operation with an output of 100% or higher. Use the Servomotor so that the effective force remains within the continuous duty zone given in Force-Motor Speed Characteristics on page 245.

External Dimensions

SGLFW2-30

◆ Moving Coil with Polarity Sensor: SGLFW2-30D070AS

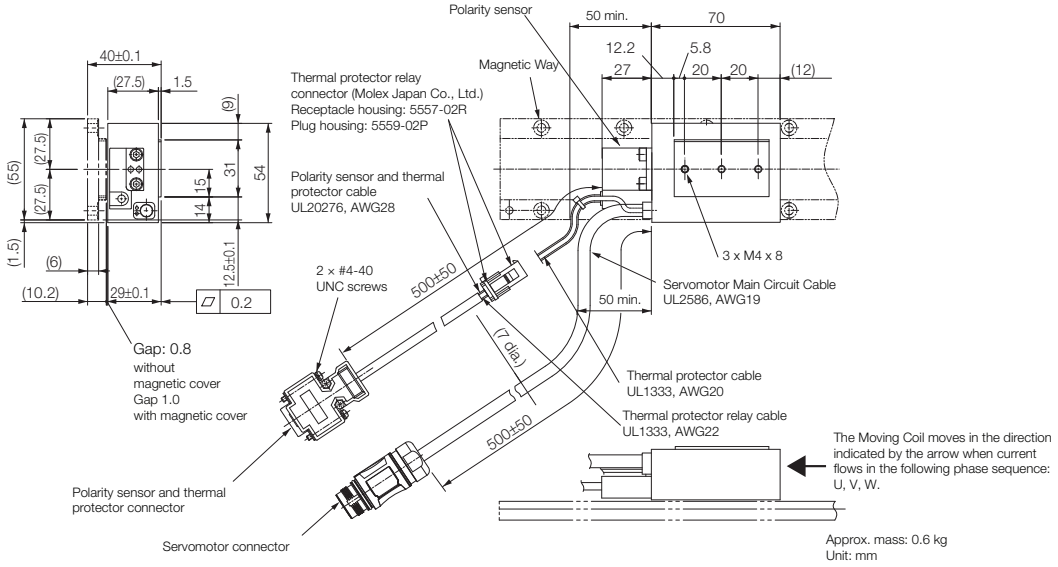

◆ Moving Coil without Polarity Sensor: SGLFW2-30D070AT

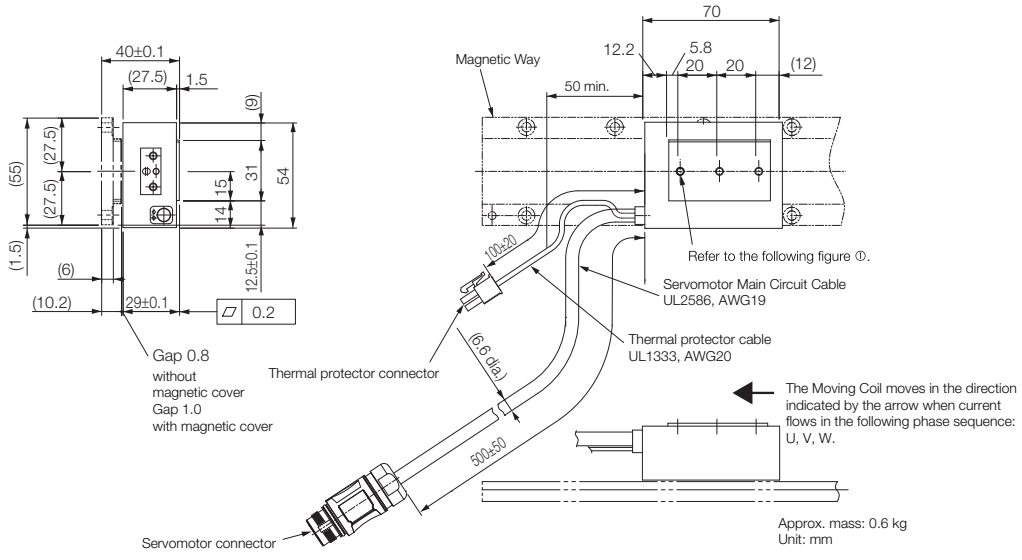

Moving Coil Model SGLFW2	L1	L2	L3	Approx Mass (kg)
30D070AS	70	40	54.6	0.6
30D070AT				

Refer to the following section for the connector specifications for the Sensor Cable and Servomotor Main Circuit Cable or Moving Coils with Polarity Sensors: SGLFW2-30 and -45.

◆ Moving Coils with Polarity Sensors: SGLFW2-30D□□□AS

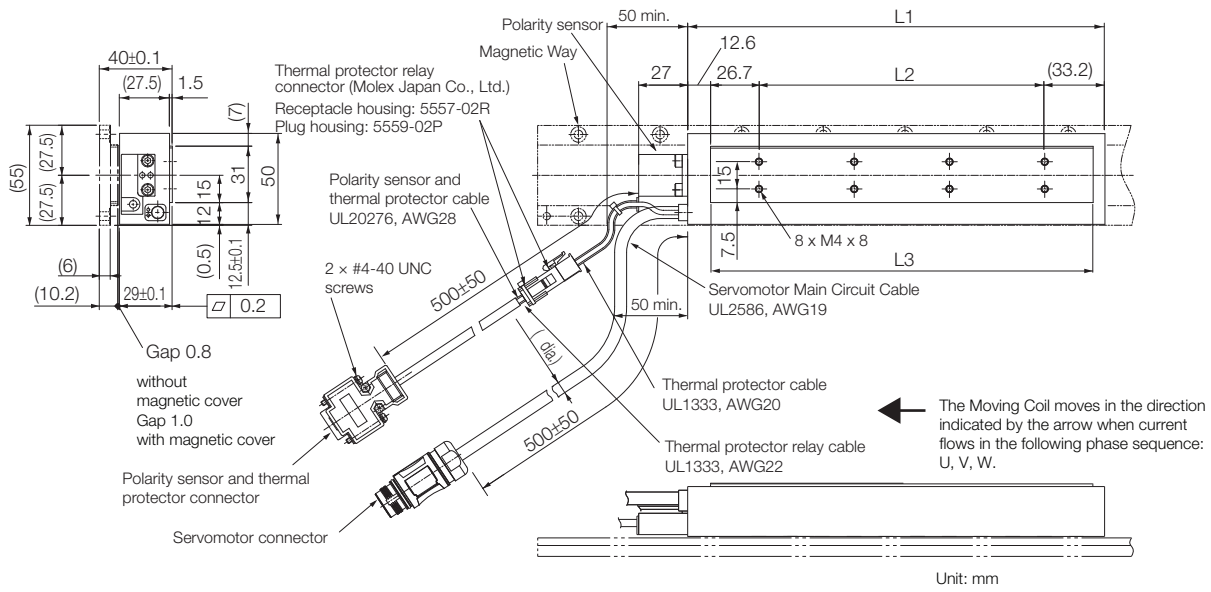

◆ Moving Coils without Polarity Sensors: SGLFW2-30D□□□AT

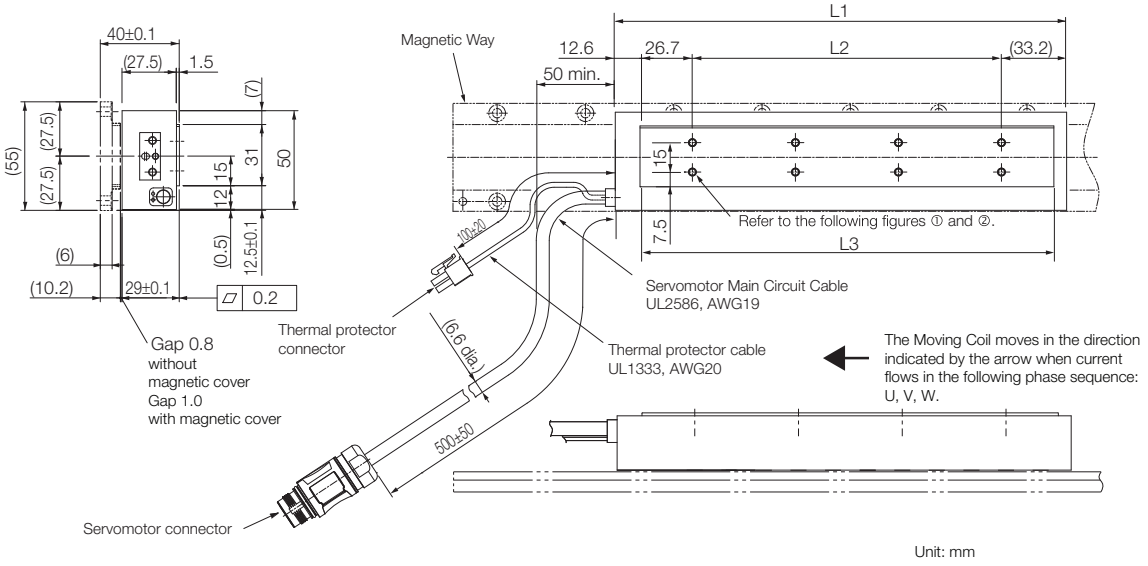

Moving Coil Model SGLFW2	L1	L2	L3	Approx Mass (kg)
30D120A□	125	52.5	105.9	1.0
30D230A□	130	157.5	210.9	1.8

Refer to the following section for the connector specifications for the Sensor Cable and Servomotor Main Circuit Cable or Moving Coils with Polarity Sensors: SGLFW2-30 and -45.

◆ Magnetic Ways: SGLFM2-30□□□A

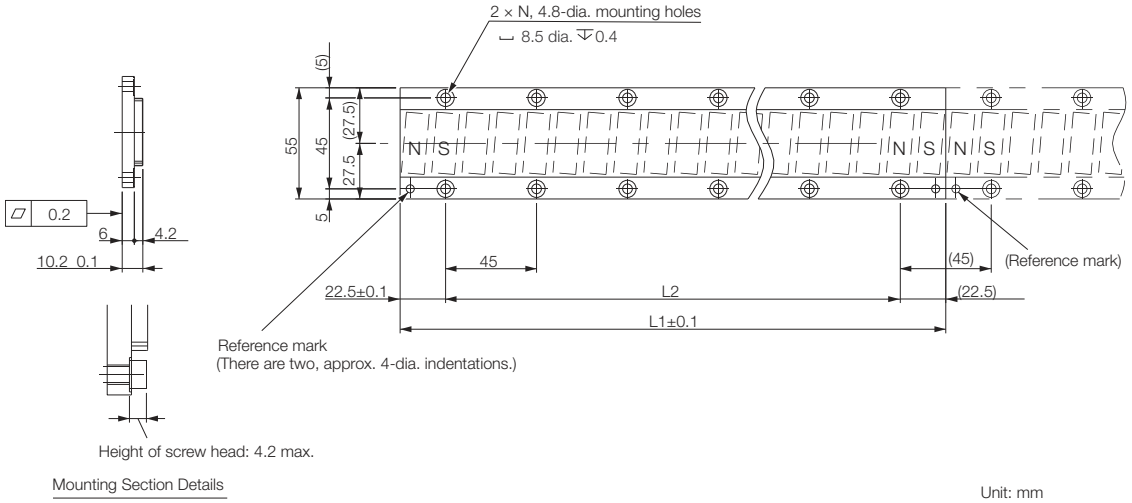

Magnetic Way Model SGLFM2	L1	L2	L3	Approx Mass (kg)
30270A	270	225 (45 × 5	6	09
30450A	450	405 (45 × 9)	10	1.5
30630A	630	585 (45 × 13)	14	2.0

Note:

More than one Magnetic Way can be connected. Connect the Magnetic Ways so that the reference marks on them are aligned in the same direction as shown in the figure

SGLFW2-45

◆ Moving Coils with Polarity Sensors: SGLFW2-45D□□□AS

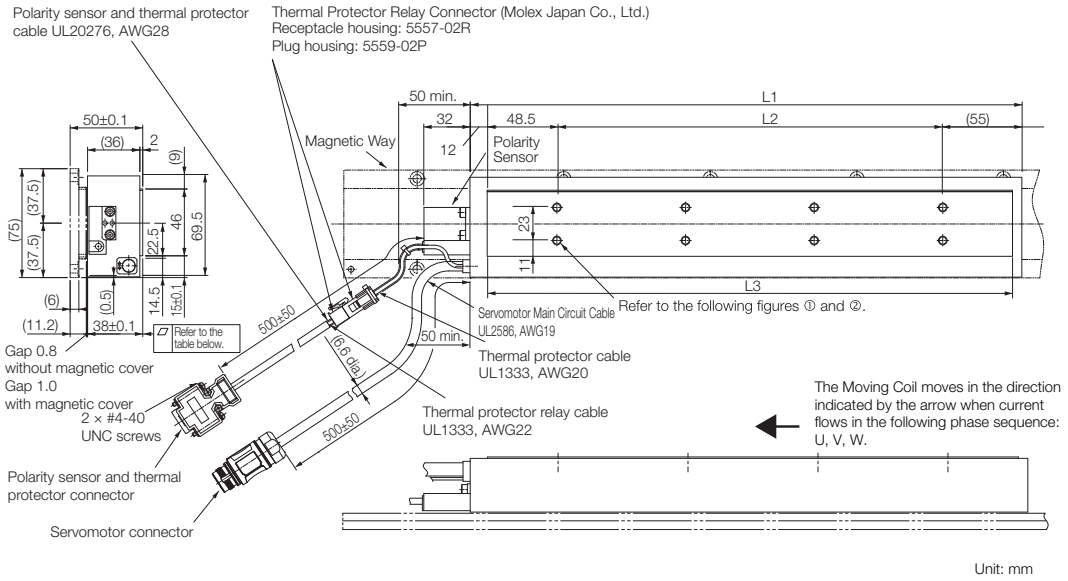

Unit: mm

◆ Moving Coils without Polarity Sensors: SGLFW2-45D□□□AT

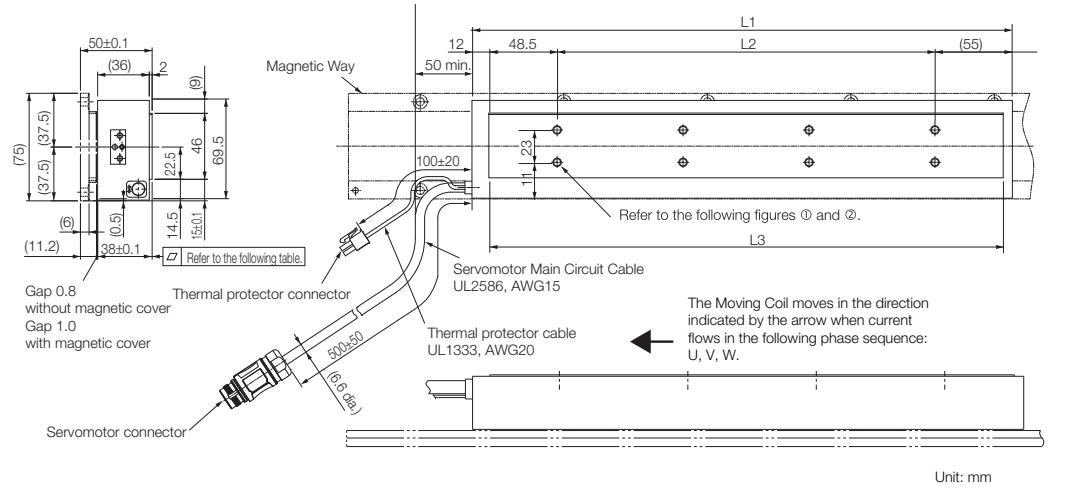

Unit: mm

Moving Coil Model SGLFW2	L1	L2	L3	Flatness	Approx Mass (kg)
45D200AS	205	89.5	187	0.2	2.9
45D380AS	384	268.5	365.5	0.3	5.5
45D200AT	205	89.5	187	0.2	2.9
45D380AT	384	268.5	365.5	0.3	5.5

Refer to the following section for the connector specifications for the Sensor Cable and Servomotor Main Circuit Cable or Moving Coils with Polarity Sensors: SGLFW2-30 and -45.

◆ Magnetic Ways: SGLFM2-45□□□A

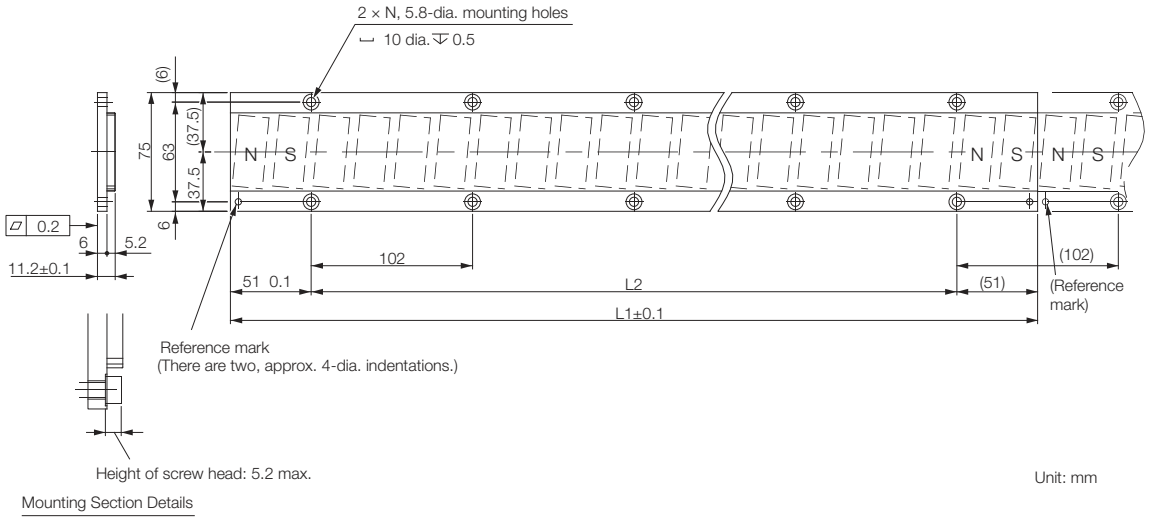

Note: More than one Magnetic Way can be connected. Connect the Magnetic Ways so that the reference marks on them are aligned in the same direction as shown in the figure.

Magnetic Way Model SGLFM2-	L1 ± 0.1	L2	N	Approx. Mass [kg]
45306A	306	204 (102 × 2)	3	1.5
45510A	510	408 (102 × 4)	5	2.5
45714A	714	612 (102 × 6)	7	3.4

SGLFW2-90

◆ Moving Coils with Polarity Sensors: SGLFW2-90D□□□AS

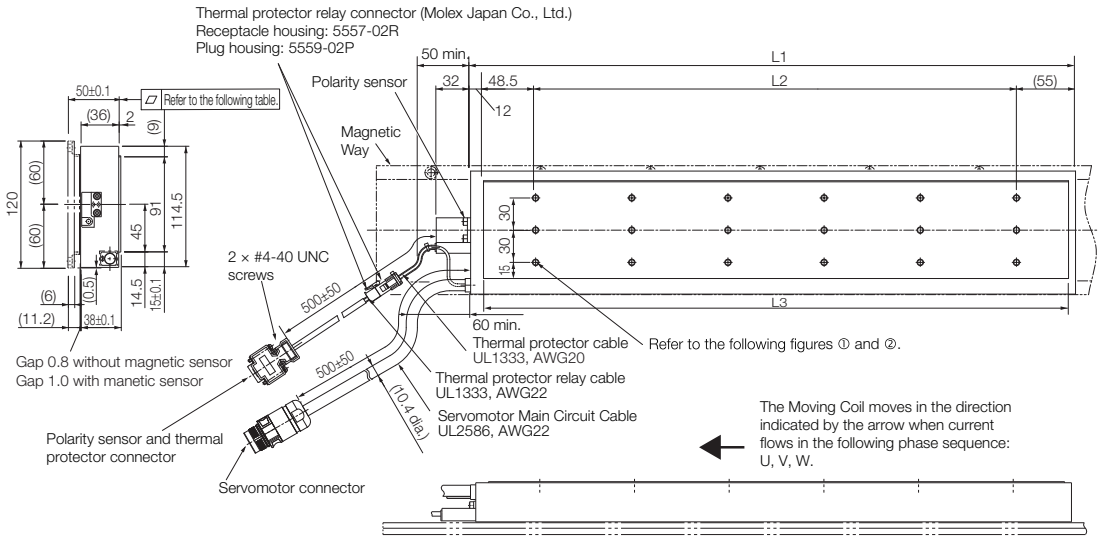

Unit: mm

◆ Moving Coils without Polarity Sensors: SGLFW2-90D□□□AT

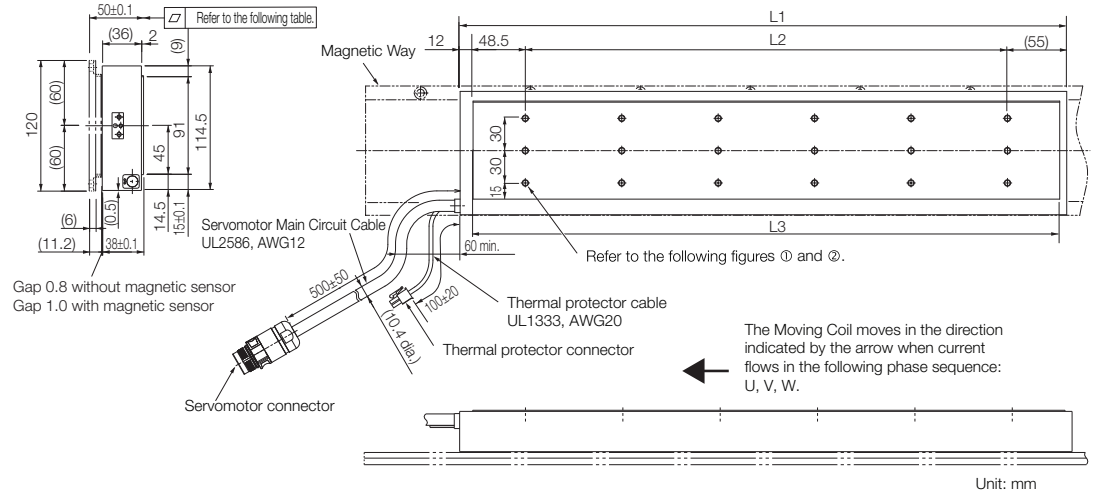

Unit: mm

Moving Coil Model SGLFW2	L1	L2	L3	Flatness	Approx Mass (kg)
90D200AS	205	89.5	187	0.2	5.3
90D380AS	384	268.5	365.5	0.3	10.1
90D560AS	563	447.5	544	0.3	14.9
90D200AT	205	89.5	187	0.2	5.3
90D380AT	384	268.5	365.5	0.3	10.1

Refer to the following section for the connector specifications for the Sensor Cable and Servomotor Main Circuit Cable or Moving Coils with Polarity Sensors: SGLFW2-90 and -1D.

◆ Magnetic Ways: SGLFM2-90□□□A

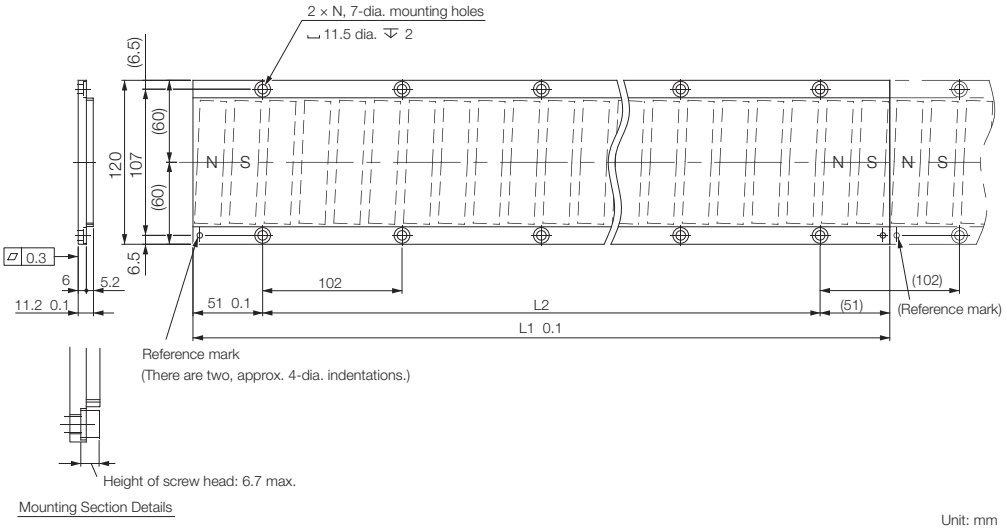

Note: More than one Magnetic Way can be connected. Connect the Magnetic Ways so that the reference marks on them are aligned in the same direction as shown in the figure.

Magnetic Way Model SGLFM2-	L1 ± 0.1	L2	N	Approx. Mass [kg]
90306A	306	204 (102 × 2)	3	1.5
90510A	510	408 (102 × 4)	5	2.5
90714A	714	612 (102 × 6)	7	3.4

SGLFW2-1D

◆ Moving Coils with Polarity Sensors: SGLFW2-1DD□□□AS

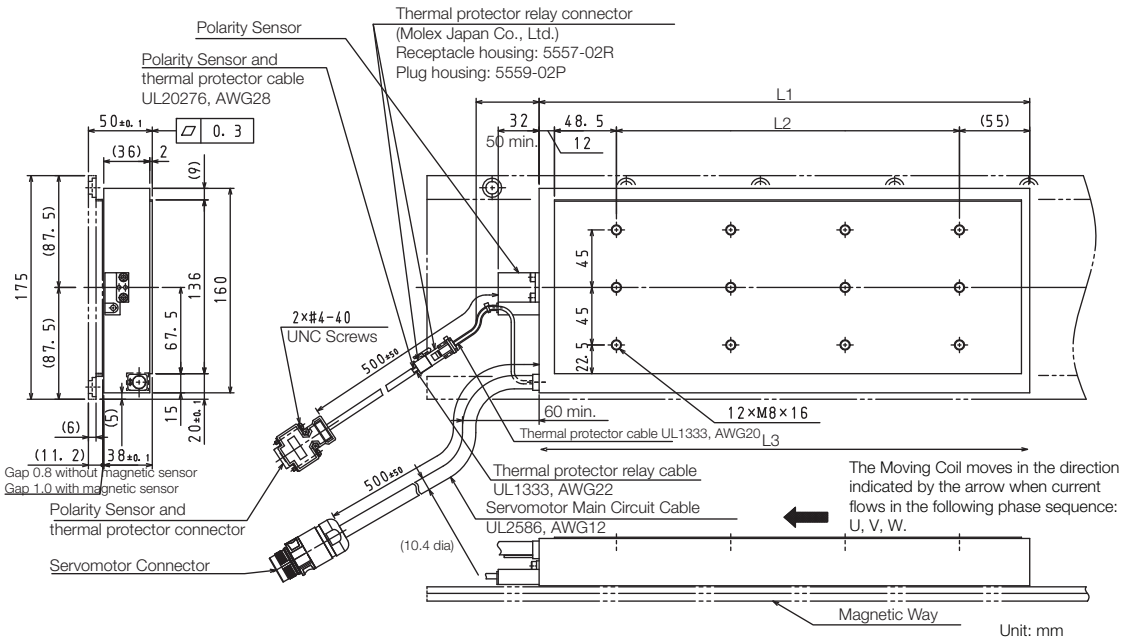

◆ Moving Coils without Polarity Sensors: SGLFW2-1DD□□□AT

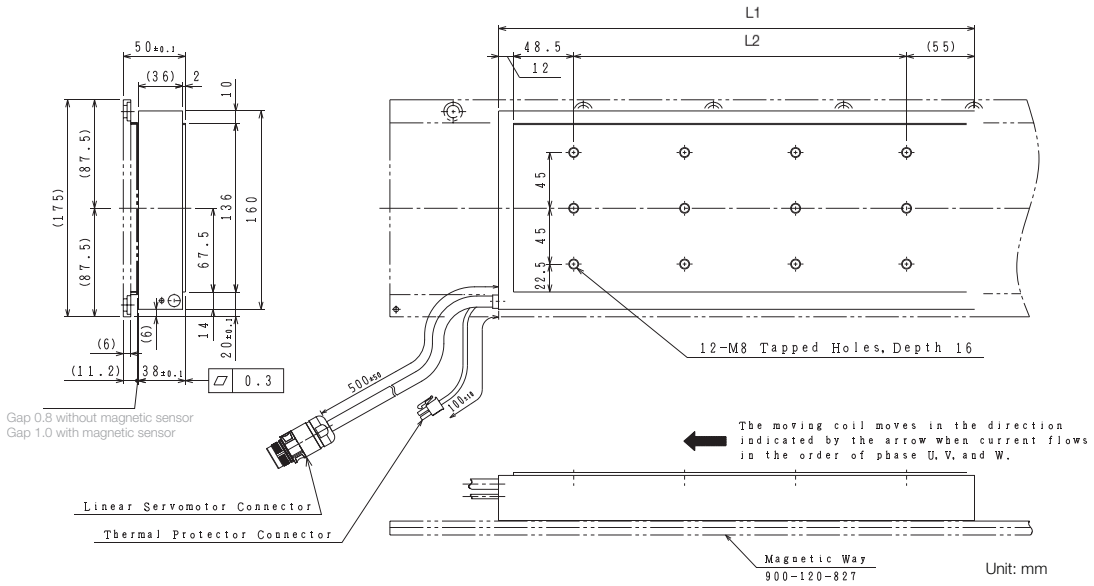

Moving Coil Model SGLFW2	L1	L2	L3	Flatness	Approx Mass (kg)
1DD380A□	384	268.5	365.5	0.3	14.6
1DD560A□	563	447.5	544	0.3	21.5

Refer to the following section for the connector specifications for the Sensor Cable and Servomotor Main Circuit Cable or Moving Coils with Polarity Sensors: SGLFW2-90 and -1D.

◆ Magnetic Ways: SGLFM2-1D□□□A

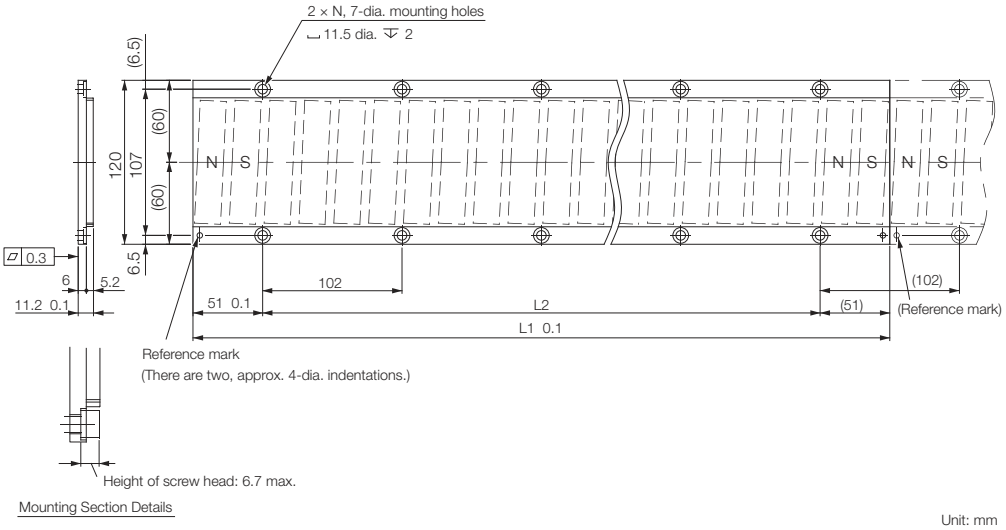

Note: More than one Magnetic Way can be connected. Connect the Magnetic Ways so that the reference marks on them are aligned in the same direction as shown in the figure.

Magnetic Way Model SGLFM2-	L1 ± 0.1	L2	N	Approx. Mass [kg]
1D306A	306	204 (102 × 2)	3	3.7
1D510A	510	408 (102 × 4)	5	6.2
1D714A	714	612 (102 × 6)	7	8.6

Connector Specifications

◆ Moving Coils with Polarity Sensors: SGLFW2-30 and -45

■ Servomotor Connector

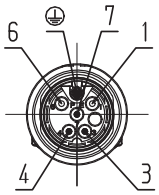

1	-
3	Phase U
4	Phase V
6	-
7	Phase W
Ground	FG
Case	Shield

Connector: ST-5EP1N8A9003S (1607706)
Contact: ST-10KP030 (1618261)
From Phoenix Contact GmbH & Co. KG

■ Polarity Sensor and Thermal Protector Connector

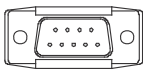

1	+5 V (thermal protector), +5 V (power supply)		
2	Su	**6**	Not used
3	Sv	**7**	
4	Sw	**8**	
5	0 V (power supply)	**9**	Thermal protector

Pin connector: 17JE-23090-02 (D8C) -CG
From DDK Ltd.
Mating Connector
Socket connector: 17JE-13090-02 (D8C) A-CG
Studs: 17L-002C or 17L-002C1

■ Polarity Sensor Output Signal

The figure on the right shows the relationship between the Su, Sv, and Sw polarity sensor output signals and the inverse power of each motor phase Vu, Vv, and Vw when the Moving Coil moves in the direction indicated by the arrow in the dimensional drawings of the Moving Coil.

SGLFW-30D070AS

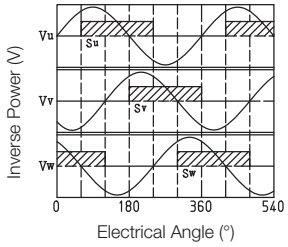

SGLFW-30D120AS
SGLFW-30D230AS

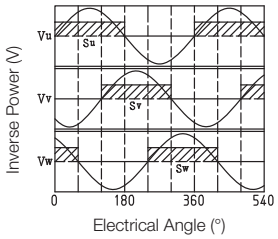

SGLFW-45D200AS
SGLFW-45D380AS

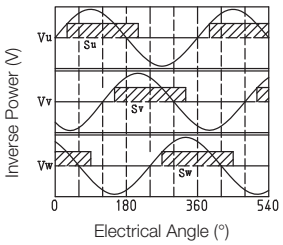

◆ Moving Coils without Polarity Sensors: SGLFW2-30 and -45

■ Servomotor Connector

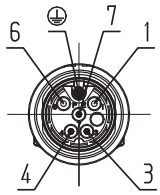

1	-
3	Phase U
4	Phase V
6	-
7	Phase W
Ground	FG
Case	Shield

Connector: ST-5EP1N8A9003S (1607706)
Contact: ST-10KP030 (1618261)
From Phoenix Contact GmbH & Co. KG

■ Thermostat Connector

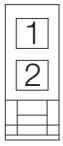

1	Thermal protector
2	Thermal protector

Receptacle housing: 5557-02R
Terminals: 5556T or 5556TL
From Molex Japan Co., Ltd.
Mating Connector
Plug housing: 5559-02P
Terminals: 5558T or 5558TL

◆ Moving Coils with Polarity Sensors: SGLFW2-90 and -1D

■ Servomotor Connector

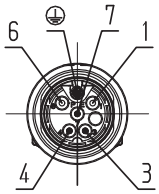

1	Phase V
3	-
4	-
6	Phase U
7	Phase W
Ground	FG
Case	Shield

Connector: ST-5EP1N8A9003S (1607706)
Contact: ST-10KP030 (1618261)
From Phoenix Contact GmbH & Co. KG

■ Thermostat Connector

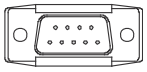

1	+5 V (thermal protector), +5 V (power supply)		
2	Su	**6**	Not used
3	Sv	**7**	
4	Sw	**8**	
5	0 V (power supply)	**9**	Thermal protector

Pin connector: 17JE-23090-02 (D8C) -CG
From DDK Ltd.
Mating Connector
Socket connector: 17JE-13090-02 (D8C) A-CG
Studs: 17L-002C or 17L-002C1

■ Polarity Sensor Output Signal

The figure on the right shows the relationship between the Su, Sv, and Sw polarity sensor output signals and the inverse power of each motor phase Vu, Vv, and Vw when the Moving Coil moves in the direction indicated by the arrow in the dimensional drawings of the Moving Coil.

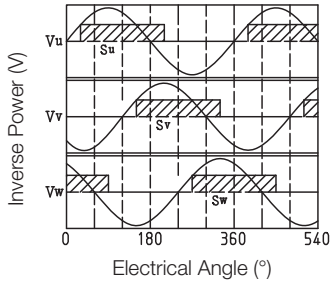

Selecting Cables

◆ Cable Configurations

To select a Linear Encoder, use Recommended Linear Encoders (pages 306 and 307). Prepare the cable required for the encoder.

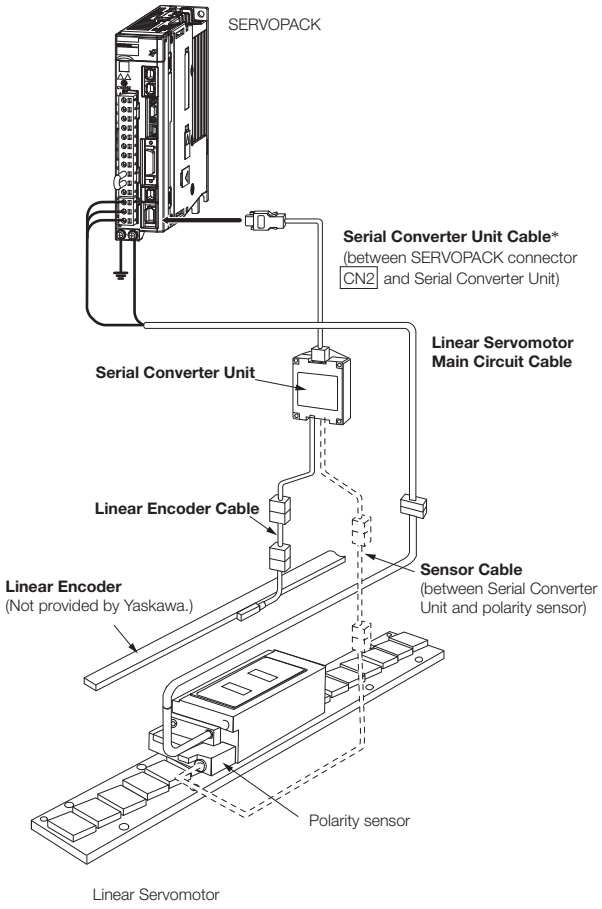

* You can connect directly to an absolute linear encoder.

Note: Refer to the following manual for the following information.

- Cable dimensional drawings and cable connection specifications
- Order numbers and specifications of individual connectors for cables
- Order numbers and specifications for wiring materials

📖 **Σ-7-Series AC Servo Drive Peripheral Device Selection Manual (Manual No.: SIEP S800001 32)**

◆ Linear Servomotor Main Circuit Cables

Linear Servomotor Model	Cable & Connector Type	Length (L)	Order Number	Appearance
SGLFW2-30D070 to SGLFW2-45D380	Flexible Power cable 4 x 1.5mm² with M17 connector	3 m	JZSP-C7M143-03-E-G6	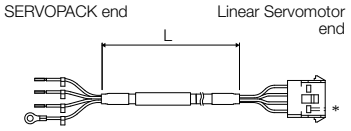
		5 m	JZSP-C7M143-05-E-G6	
		10 m	JZSP-C7M143-10-E-G6	
		15 m	JZSP-C7M143-15-E-G6	
		20 m	JZSP-C7M143-20-E-G6	
SGLFW2-90D200 to SGLFW2-1DD380	Flexible Power cable 4 x 2.5mm² with M23 connector	3 m	JZSP-C7M154-03-E-G6	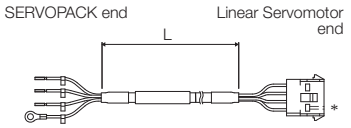
		5 m	JZSP-C7M154-05-E-G6	
		10 m	JZSP-C7M154-10-E-G6	
		15 m	JZSP-C7M154-15-E-G6	
		20 m	JZSP-C7M154-20-E-G6	
SGLFW2-1DD560	Flexible Power cable 4 x 4mm² with M23 connector	3 m	JZSP-C7M164-03-E-G6	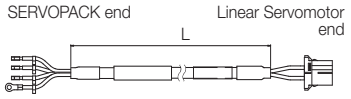
		5 m	JZSP-C7M164-05-E-G6	
		10 m	JZSP-C7M164-10-E-G6	
		15 m	JZSP-C7M164-15-E-G6	
		20 m	JZSP-C7M164-20-E-G6	

◆ Motor Connection Shielding Clamp

SERVOPACK Model	Order Number	Appearance
Sigma-7 400V up to 3.0kW	KLBUE 4-13.5_SC	
Sigma-7 400V from 5kW up to 7.5kW	KLBUE 10-20_SC	
Sigma-7 400V for 11kW & 15kW	KLBUE 15-32_SC	

SGLG (Coreless Models)

Model Designations

Moving Coil

S G L G W - 30 A 050 C P □

Linear Σ Series Linear Servo Motors

1st digit | 2nd digit | 3rd+4th digits | 5th digit | 6th+7th+8th digits | 9th digit | 10th digit | 11th digit

1st digit Servo Motor Type

Code	Specification
G	Coreless model

2nd digit Moving Coil/Magnetic Way

Code	Specification
W	Moving Coil

3rd+4th digits Magnet Height

Code	Specification
30	30 mm
40	40 mm
60	60 mm
90	86 mm

5th digit Power Supply Voltage

Code	Specification
A	200 VAC

6th+7th+8th digits Length of Moving Coil

Code	Specification
050	50 mm
080	80 mm
140	140 mm
200	199 mm
253	252.5 mm
365	365 mm
370	367 mm
535	535 mm

9th digit Design Revision Order

A, B...

10th digit Sensor Specification and Cooling Method

Code	Specifications		Applicable Models
	Polarity Sensor	Cooling Method	
None	None	Self-cooled	All models
C	None	Air-cooled	SGLGW -40A, -60A, -90A
H	Yes	Air-cooled	
P	Yes	Self-cooled	All models

11th digit Connector for Servo Motor Main Circuit Cable

Code	Specification	Applicable Models
None	Connector from Tyco Electronics Japan G.K.	All models
D	Connector from Interconnectron GmbH	SGLGW -30A, -40A, -60A

■ Non Stock Items

Note: This information is provided to explain model numbers. It is not meant to imply that models are available for all combinations of codes.

Magnetic Way

S G L G M - 30 108 A □

Linear Σ Series Linear Servo Motors

1st digit | 2nd digit | 3rd+4th digits | 5th+6th+7th digits | 8th digit | 9th digit

1st digit Servo Motor Type

(Same as for the Moving Coil.)

2nd digit Moving Coil/Magnetic Way

Code	Specification
M	Magnetic Way

3rd+4th digits Magnet Height

(Same as for the Moving Coil.)

5th+6th+7th digits Length of Magnetic Way

Code	Specification
090	90 mm
108	108 mm
216	216 mm
225	225 mm
252	252 mm
360	360 mm
405	405 mm
432	432 mm
450	450 mm
504	504 mm

8th digit Design Revision Order

A, B, C*...

9th digit Options

Code	Specification	Applicable Models
None	Standard-force	All models
-M	High-force	SGLGM-40, -60

■ Non Stock Items

* The SGLGM-40 and SGLGM-60 also have a CT code.
  - C = Without mounting holes on the bottom
  - CT = With mounting holes on the bottom

Note: This information is provided to explain model numbers. It is not meant to imply that models are available for all combinations of codes.

Precautions on Moving Coils with Polarity Sensors

Note

When you use a Moving Coil with a Polarity Sensor, the Magnetic Way must cover the bottom of the polarity sensor. Refer to the example that shows the correct installation.
When determining the length of the Moving Coil's stroke or the length of the Magnetic Way, consider the total length (L) of the Moving Coil and the polarity sensor. Refer to the following table.

Correct Installation

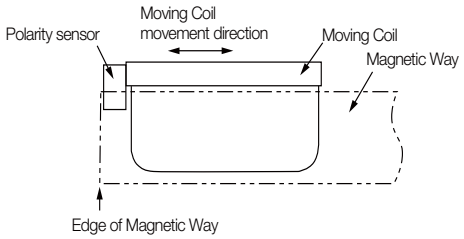

Incorrect Installation

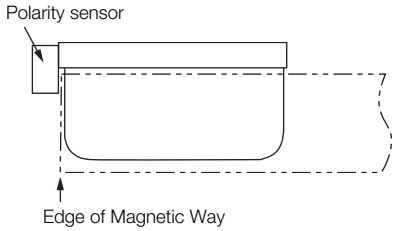

◆ Total Length of Moving Coil with Polarity Sensor

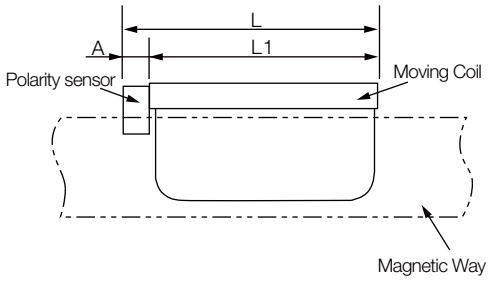

Moving Coil Model SGLGW-	Length of Moving Coil, L1 [mm]	Length of Polarity Sensor, A [mm]	Total Length, L [mm]
30A050☐ P☐	50	0 (Included in the length of Moving Coil.)	50
30A080☐ P☐	80		80
40A140☐ H☐ 40A140☐ P☐	140	16	156
40A253☐ H☐ 40A253☐ P☐	252.5		268.5
40A365☐ H☐ 40A365☐ P☐	365		381
60A140☐ H☐ 60A140☐ P☐	140	16	156
60A253☐ H☐ 60A253☐ P☐	252.5		268.5
60A365☐ H☐ 60A365☐ P☐	365		381
90A200☐ H☐ 90A200☐ P☐	199	0 (Included in the length of Moving Coil.)	199
90A370☐ H☐ 90A370☐ P☐	367		367
90A535☐ H☐ 90A535☐ P☐	535		535

Specifications and Ratings

Specifications: With Standard-Force Magnetic Way

Linear Servo Motor Moving Coil Model SGLGW-		30A		40A			60A			90A		
		050C	080C	140C	253C	365C	140C	253C	365C	200C	370C	535C
Time Rating		Continuous										
Thermal Class		B										
Insulation Resistance		500 VDC, 10 MΩ min.										
Withstand Voltage		1,500 VAC for 1 minute										
Excitation		Permanent magnet										
Cooling Method		Self-cooled or air-cooled (Only self-cooled models are available for the SGLGW-30A.)										
Protective Structure		IP00										
Environmental Conditions	Surrounding Air Temperature	0°C to 40°C (with no freezing)										
	Surrounding Air Humidity	20% to 80% relative humidity (with no condensation)										
	Installation Site	• Must be indoors and free of corrosive and explosive gases. • Must be well-ventilated and free of dust and moisture. • Must facilitate inspection and cleaning. • Must have an altitude of 1,000 m or less. • Must be free of strong magnetic fields.										
Shock Resistance	Impact Acceleration Rate	196 m/s^2										
	Number of Impacts	2 times										
Vibration Resistance	Vibration Acceleration Rate	49 m/s^2 (the vibration resistance in three directions, vertical, side-to-side, and front-to-back)										

Ratings: With Standard-Force Magnetic Way

Linear Servo Motor Moving Coil Model SGLGW-		30A		40A			60A			90A		
		050C	080C	140C	253C	365C	140C	253C	365C	200C	370C	535C
Rated Motor Speed (Reference Speed during Speed Control)*1	m/s	1.5	1.5	2.0	2.0	2.0	2.3	2.3	2.3	1.8	1.5	1.5
Maximum Speed*1	m/s	5.0	5.0	5.0	5.0	5.0	4.8	4.8	4.8	4.0	4.0	4.0
Rated Force*1, *2	N	12.5	25	47	93	140	70	140	210	325	550	750
Maximum Force*1	N	40	80	140	280	420	220	440	660	1300	2200	3000
Rated Current*1	Arms	0.51	0.79	0.80	1.6	2.4	1.2	2.2	3.3	4.4	7.5	10.2
Maximum Current*1	Arms	1.6	2.5	2.4	4.9	7.3	3.5	7.0	10.5	17.6	30.0	40.8
Moving Coil Mass	kg	0.10	0.15	0.34	0.60	0.87	0.42	0.76	1.1	2.2	3.6	4.9
Force Constant	N/Arms	26.4	33.9	61.5	61.5	61.5	66.6	66.6	66.6	78.0	78.0	78.0
BEMF Constant	Vrms/(m/s)/phase	8.80	11.3	20.5	20.5	20.5	22.2	22.2	22.2	26.0	26.0	26.0
Motor Constant	$N/\sqrt{W}$	3.66	5.63	7.79	11.0	13.5	11.1	15.7	19.2	26.0	36.8	45.0
Electrical Time Constant	ms	0.19	0.41	0.43	0.43	0.43	0.45	0.45	0.45	1.4	1.4	1.4
Mechanical Time Constant	ms	7.5	4.7	5.6	5.0	4.8	3.4	3.1	3.0	3.3	2.7	2.4
Thermal Resistance (with Heat Sink)	K/W	5.19	3.11	1.67	0.87	0.58	1.56	0.77	0.51	0.39	0.26	0.22
Thermal Resistance (without Heat Sink)	K/W	8.13	6.32	3.02	1.80	1.23	2.59	1.48	1.15	1.09	0.63	0.47
Magnetic Attraction	N	0	0	0	0	0	0	0	0	0	0	0
Combined Magnetic Way, SGLGM-		30□ □ □ A		40□ □ □ C□			60□ □ □ C□			90□ □ □ A		
Combined Serial Converter Unit, JZDP-□ □ □ □		250	251	252	253	254	258	259	260	264	265	266
Applicable SERVOPACKs	SGD7S-	R70A	R90A	R90A	1R6A	2R8A	1R6A	2R8A	5R5A	120A	180A	200A
	SGD7W-	1R6A	1R6A	1R6A	1R6A	2R8A	1R6A	2R8A	5R5A	–	–	–

*1. These values are for operation in combination with a SERVOPACK when the temperature of the armature winding is 100°C. The values for other items are at 20°C. These are typical values.

*2. The rated forces are the continuous allowable force values at a surrounding air temperature of 40°C with an aluminum heat sink of the dimensions given in the following table.

- Heat Sink Dimensions
  - 200 mm × 300 mm × 12 mm: SGLGW-30A050C, -30A080C, -40A140C, and -60A140C
  - 300 mm × 400 mm × 12 mm: SGLGW-40A253C and -60A253C
  - 400 mm × 500 mm × 12 mm: SGLGW-40A365C and -60A365C
  - 800 mm × 900 mm × 12 mm: SGLGW-90A200C, -90A370C, and -90A535C

Force-Motor Speed Characteristics

A : Continuous duty zone ———— (solid lines): With three-phase 200-V input
B : Intermittent duty zone - - - - - - - - (dotted lines): With single-phase 200-V input

SGLGW-30A050C*

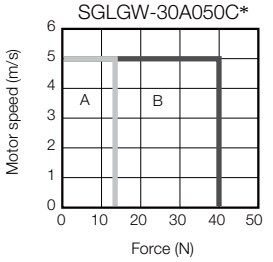

SGLGW-30A080C*

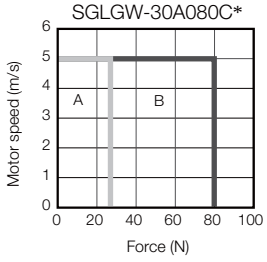

SGLGW-40A140C

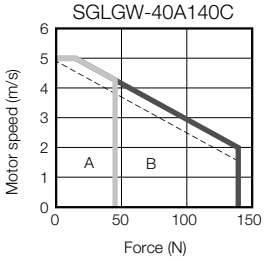

SGLGW-40A253C

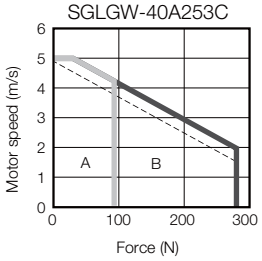

SGLGW-40A365C

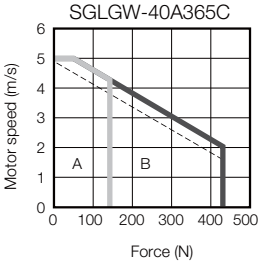

SGLGW-60A140C

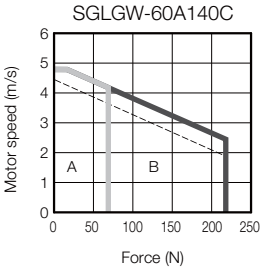

SGLGW-60A253C

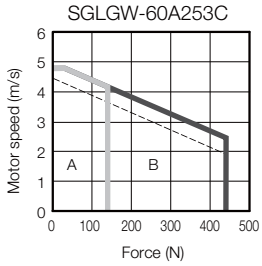

SGLGW-60A365C

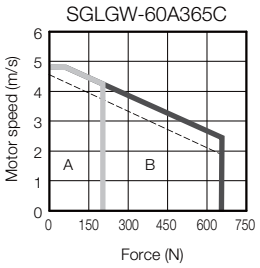

SGLGW-90A200C

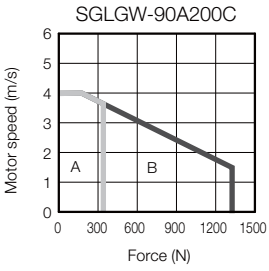

SGLGW-90A370C

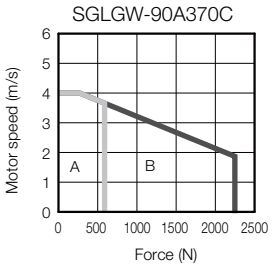

SGLGW-90A535C

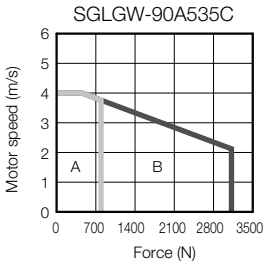

* The characteristics are the same for three-phase 200 V and single-phase 200 V.

Note: 1. These values are for operation in combination with a SERVOPACK when the temperature of the armature winding is 100°C. These are typical values.

2. The characteristics in the intermittent duty zone depend on the power supply voltage.

3. If the effective force is within the allowable range for the rated force, the Servo Motor can be used within the intermittent duty zone.

4. If you use a Servo Motor Main Circuit Cable that exceeds 20 m, the intermittent duty zone in the torque-motor speed characteristics will become smaller because the voltage drop increases.

Servo Motor Overload Protection Characteristics

The overload detection level is set for hot start conditions with a Servo Motor surrounding air temperature of 40°C.

SGLGW-30A

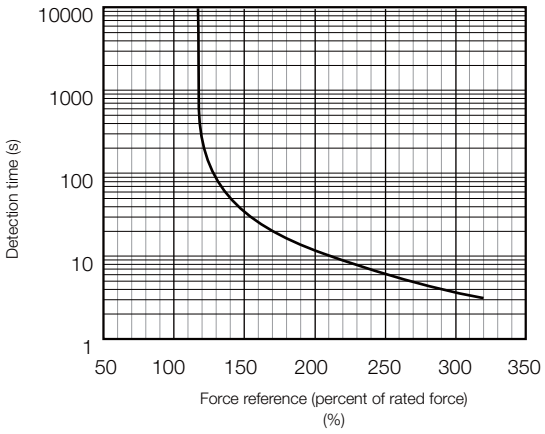

SGLGW-40A

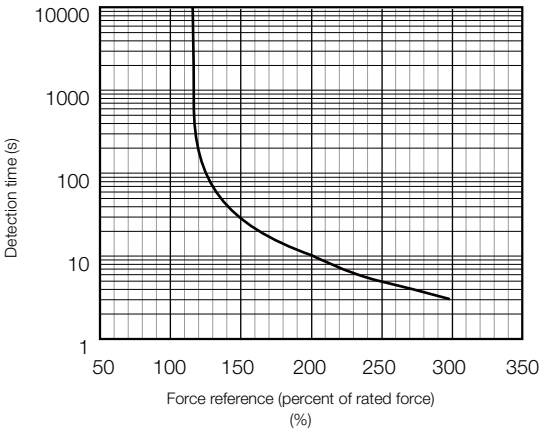

SGLGW-60A

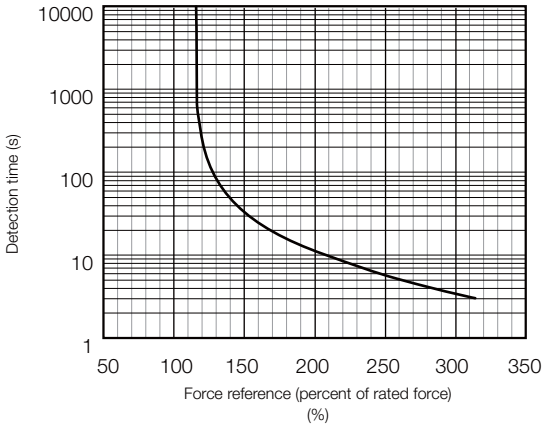

SGLGW-90A

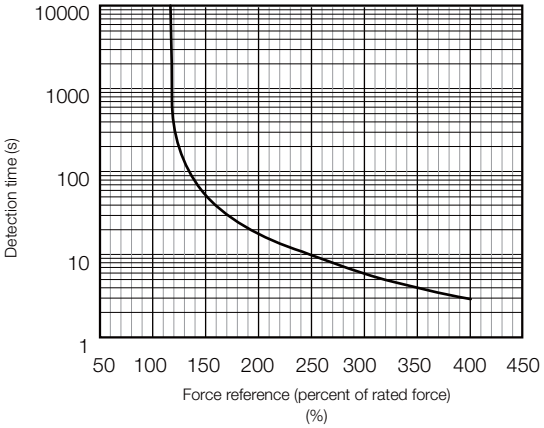

Note: The above overload protection characteristics do not mean that you can perform continuous duty operation with an output of 100% or higher. Use the Servo Motor so that the effective force remains within the continuous duty zone given in *Force-Motor Speed Characteristics* on page 292.

Specifications: With High-Force Magnetic Way

Linear Servo Motor Moving Coil Model SGLGW-		40A			60A		
		140C	253C	365C	140C	253C	365C
Time Rating		Continuous					
Thermal Class		B					
Insulation Resistance		500 VDC, 10 MΩ min.					
Withstand Voltage		1,500 VAC for 1 minute					
Excitation		Permanent magnet					
Cooling Method		Self-cooled or air-cooled					
Protective Structure		IP00					
Environmental Conditions	Surrounding Air Temperature	0°C to 40°C (with no freezing)					
	Surrounding Air Humidity	20% to 80% relative humidity (with no condensation)					
	Installation Site	• Must be indoors and free of corrosive and explosive gases. • Must be well-ventilated and free of dust and moisture. • Must facilitate inspection and cleaning. • Must have an altitude of 1,000 m or less. • Must be free of strong magnetic fields.					
Shock Resistance	Impact Acceleration Rate	196 m/s^2					
	Number of Impacts	2 times					
Vibration Resistance	Vibration Acceleration Rate	49 m/s^2 (the vibration resistance in three directions, vertical, side-to-side, and front-to-back)					

Ratings: With High-Force Magnetic Way

Linear Servo Motor Moving Coil Model SGLGW-		40A			60A		
		140C	253C	365C	140C	253C	365C
Rated Motor Speed (Reference Speed during Speed Control)*1	m/s	1.0	1.0	1.0	1.0	1.0	1.0
Maximum Speed*1	m/s	4.2	4.2	4.2	4.2	4.2	4.2
Rated Force*1, *2	N	57	114	171	85	170	255
Maximum Force*1	N	230	460	690	360	720	1080
Rated Current*1	Arms	0.80	1.6	2.4	1.2	2.2	3.3
Maximum Current*1	Arms	3.2	6.5	9.7	5.0	10.0	14.9
Moving Coil Mass	kg	0.34	0.60	0.87	0.42	0.76	1.1
Force Constant	N/Arms	76.0	76.0	76.0	77.4	77.4	77.4
BEMF Constant	Vrms/(m/s)/ phase	25.3	25.3	25.3	25.8	25.8	25.8
Motor Constant	$N/\sqrt{W}$	9.62	13.6	16.7	12.9	18.2	22.3
Electrical Time Constant	ms	0.43	0.43	0.43	0.45	0.45	0.45
Mechanical Time Constant	ms	3.7	3.2	3.1	2.5	2.3	2.2
Thermal Resistance (with Heat Sink)	K/W	1.67	0.87	0.58	1.56	0.77	0.51
Thermal Resistance (without Heat Sink)	K/W	3.02	1.80	1.23	2.59	1.48	1.15
Magnetic Attraction	N	0	0	0	0	0	0
Combined Magnetic Way, SGLGM-		40□□□C□-M			60□□□C□-M		
Combined Serial Converter Unit, JZDP-□□□□-		255	256	257	261	262	263
Applicable SERVOPACKs	SGD7S-	1R6A	2R8A	3R8A	1R6A	3R8A	7R6A
	SGD7W-	1R6A	2R8A	5R5A	1R6A	5R5A	7R6A

*1. These values are for operation in combination with a SERVOPACK when the temperature of the armature winding is 100°C. The values for other items are at 20°C. These are typical values.

*2. The rated forces are the continuous allowable force values at a surrounding air temperature of 40°C with an aluminum heat sink of the dimensions given in the following table.
- Heat Sink Dimensions
  - 200 mm × 300 mm × 12 mm: SGLGW-40A140C and -60A140C
  - 300 mm × 400 mm × 12 mm: SGLGW-40A253C and -60A253C
  - 400 mm × 500 mm × 12 mm: SGLGW-40A365C and -60A365C

Force-Motor Speed Characteristics

A : Continuous duty zone ———— (solid lines): With three-phase 200-V input
B : Intermittent duty zone - - - - - - - - (dotted lines): With single-phase 200-V input

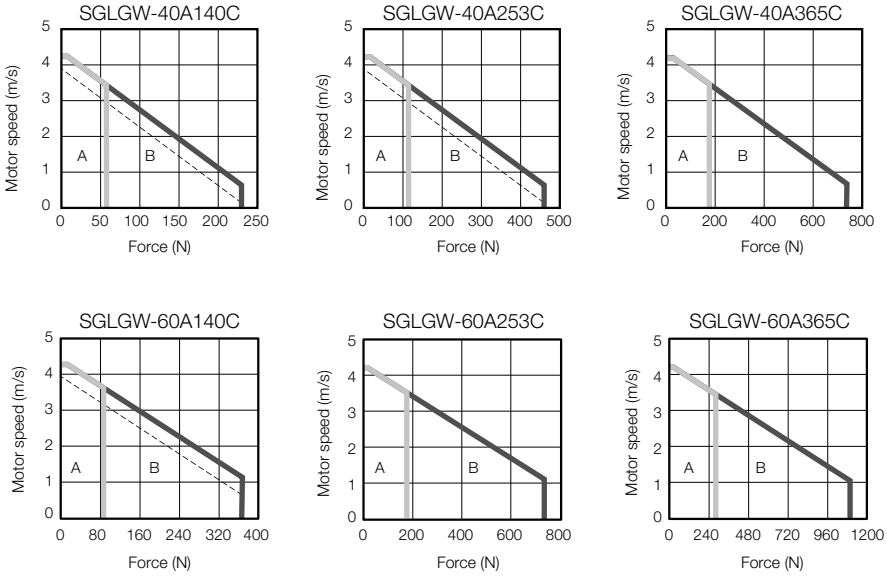

Note: 1. These values are for operation in combination with a SERVOPACK when the temperature of the armature winding is 100°C. These are typical values.
2. The characteristics in the intermittent duty zone depend on the power supply voltage.
3. If the effective force is within the allowable range for the rated force, the Servo Motor can be used within the intermittent duty zone.
4. If you use a Servo Motor Main Circuit Cable that exceeds 20 m, the intermittent duty zone in the torque-motor speed characteristics will become smaller because the voltage drop increases.

Servo Motor Overload Protection Characteristics

The overload detection level is set for hot start conditions with a Servo Motor surrounding air temperature of 40°C.

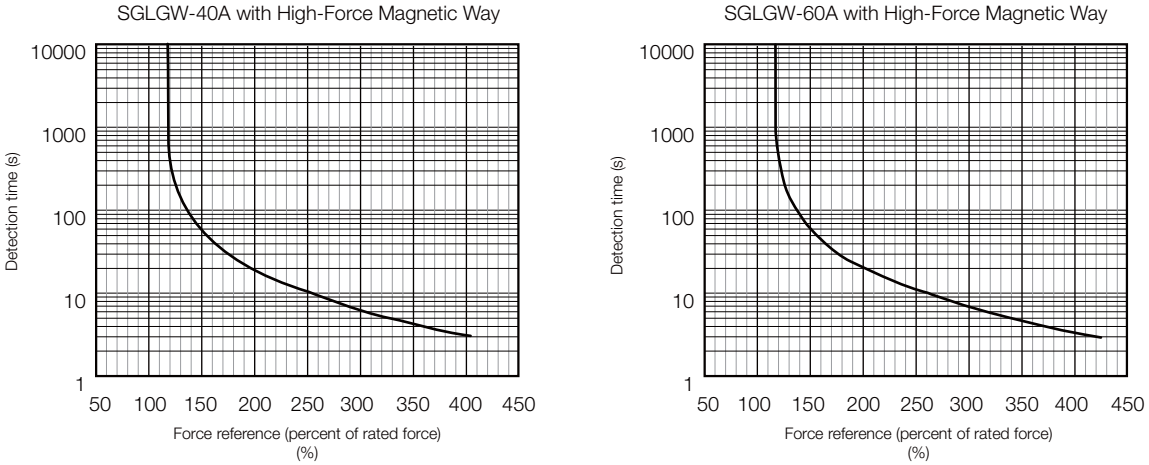

Note: The above overload protection characteristics do not mean that you can perform continuous duty operation with an output of 100% or higher. Use the Servo Motor so that the effective force remains within the continuous duty zone given in *Force-Motor Speed Characteristics* on page 296.

External Dimensions

SGLGW-30

◆ Moving Coils: SGLGW-30A□ □ □ C□

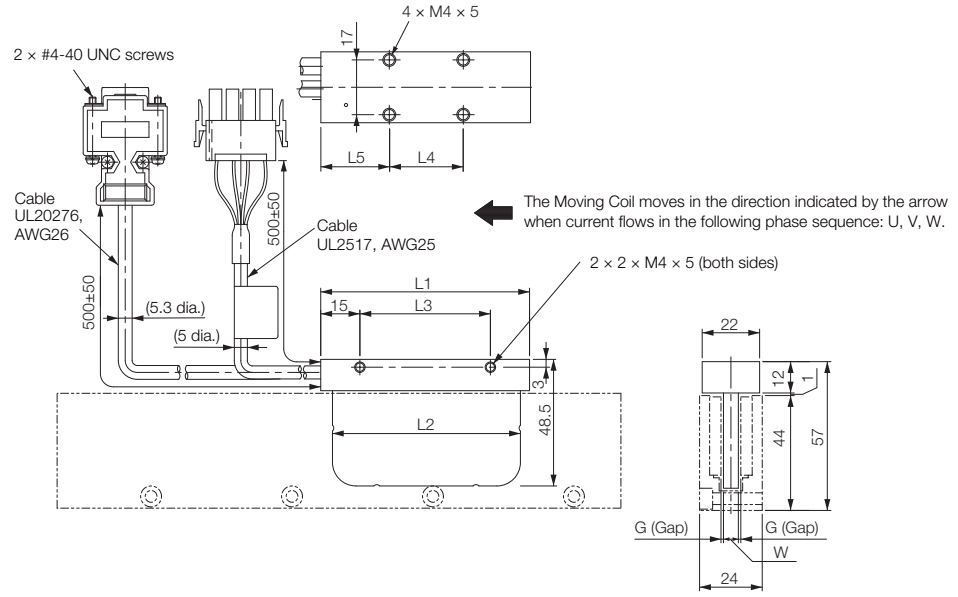

Unit: mm

Moving Coil Model SGLGW-	L1	L2	L3	L4	L5	W	G (Gap)	Approx. Mass* [kg]
30A050C□	50	48	30	20	20	5.9	0.85	0.14
30A080C□	80	72	50	30	25	5.7	0.95	0.19

* The mass is for a Moving Coil with a Polarity Sensor.
Refer to the following section for the connector specifications for the Sensor Cable and Servo Motor Main Circuit Cable.

☞ SGLGW-30A□ □ □ C□ Moving Coils Page 310

◆ Moving Coils: SGLGW-30A□ □ □ C□ D

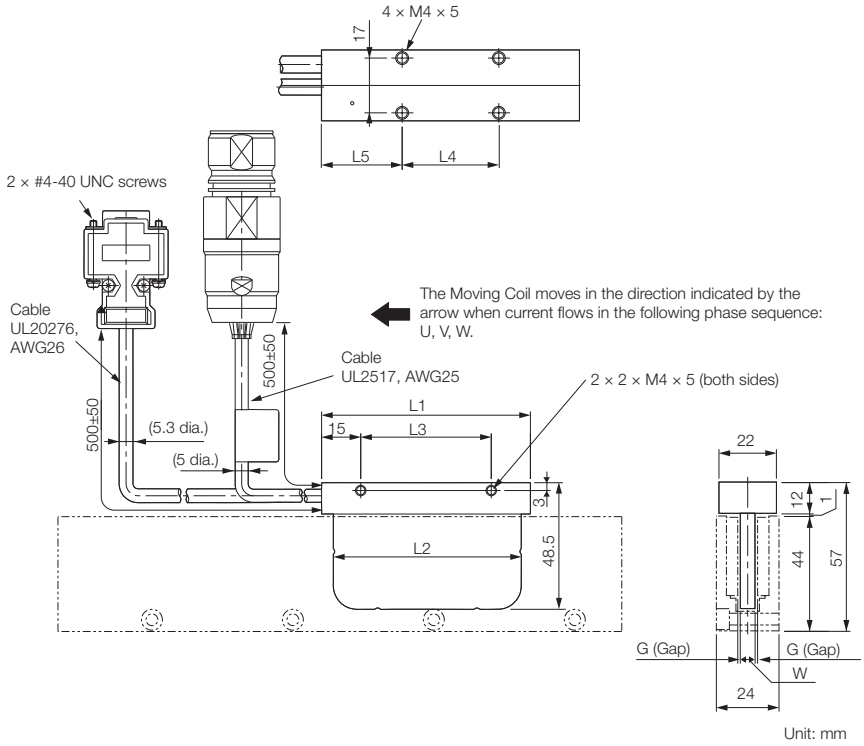

Moving Coil Model SGLGW-	L1	L2	L3	L4	L5	W	G (Gap)	Approx. Mass* [kg]
30A050C□D	50	48	30	20	20	5.9	0.85	0.14
30A080C□D	80	72	50	30	25	5.7	0.95	0.19

* The mass is for a Moving Coil with a Polarity Sensor.
Refer to the following section for the connector specifications for the Sensor Cable and Servo Motor Main Circuit Cable.

☞ SGLGW-30A□ □ □ C□ Moving Coils Page 310

◆ Standard-Force Magnetic Ways: SGLGM-30□ □ □ A

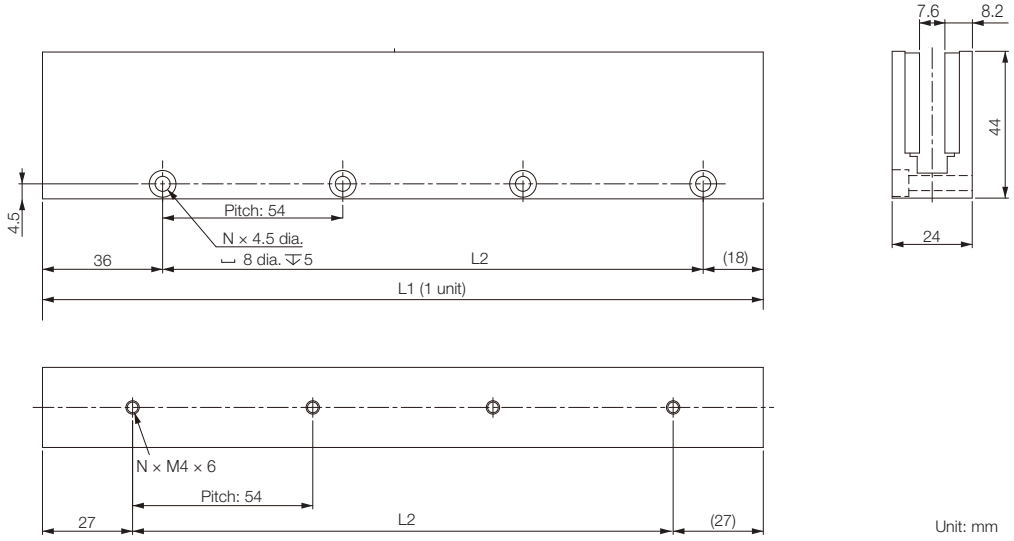

Unit: mm

Magnetic Way Model SGLGM-	L1	L2	N	Approx. Mass [kg]
30108A	$108^{-0.1}_{-0.1}$	54	2	0.6
30216A	$216^{-0.1}_{-0.1}$	162	4	1.1
30432A	$432^{-0.1}_{-0.1}$	378	8	2.3

SGLGW-40

◆ Moving Coils: SGLGW-40A□ □ □ C□

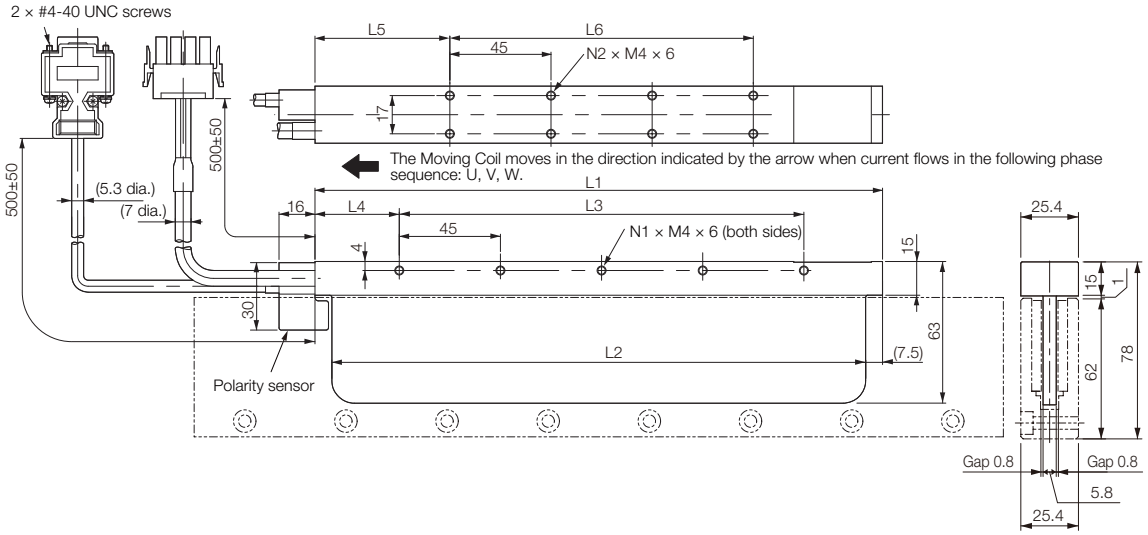

Unit: mm

Moving Coil Model SGLGW-	L1	L2	L3	L4	L5	L6	N1	N2	Approx. Mass* [kg]
40A140C□	140	125	90	30	52.5	45	3	4	0.40
40A253C□	252.5	237.5	180	37.5	60	135	5	8	0.66
40A365C□	365	350	315	30	52.5	270	8	14	0.93

* The mass is for a Moving Coil with a Polarity Sensor.
Refer to the following section for the connector specifications for the Sensor Cable and Servo Motor Main Circuit Cable.

☞ SGLGW-40A□ □ □ C□ and -60A□ □ □ C□ Moving Coils Page 312

◆ Moving Coils: SGLGW-40A□ □ □ C□ D

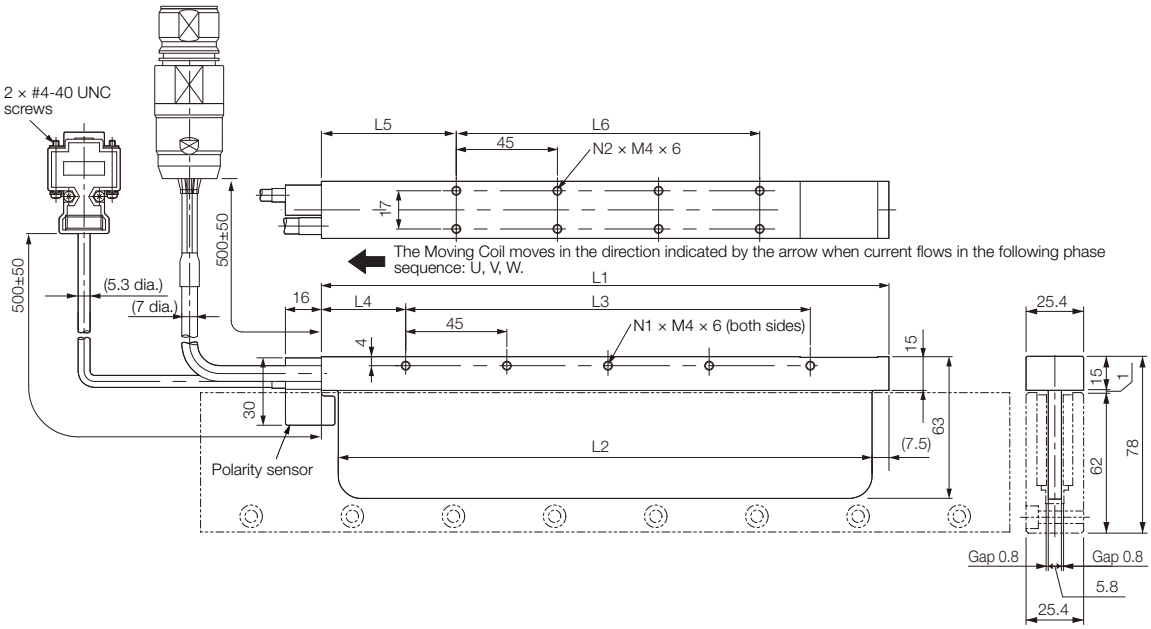

Unit: mm

Moving Coil Model SGLGW-	L1	L2	L3	L4	L5	L6	N1	N2	Approx. Mass* [kg]
40A140C□D	140	125	90	30	52.5	45	3	4	0.40
40A253C□D	252.5	237.5	180	37.5	60	135	5	8	0.66
40A365C□D	365	350	315	30	52.5	270	8	14	0.93

* The mass is for a Moving Coil with a Polarity Sensor.
Refer to the following section for the connector specifications for the Sensor Cable and Servo Motor Main Circuit Cable.

☞ SGLGW-40A□ □ □ C□ D and -60A□ □ □ C□ D Moving Coils Page 313

◆ Standard-Force Magnetic Ways:

SGLGM-40□ □ □ C (without Mounting Holes on the Bottom)
SGLGM-40□ □ □ CT (with Mounting Holes on the Bottom)

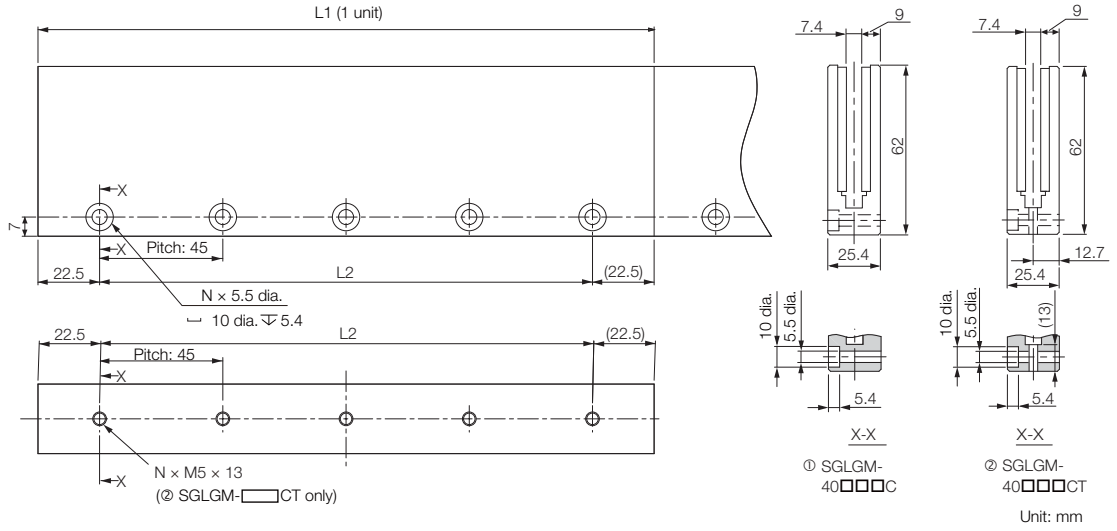

Type	Magnetic Way Model SGLGM-	L1	L2	N	Approx. Mass [kg]
Standard-Force	40090C or 40090CT	$90^{-0.1}_{-0.3}$	45	2	0.8
	40225C or 40225CT	$225^{-0.1}_{-0.3}$	180	5	2.0
	40360C or 40360CT	$360^{-0.1}_{-0.3}$	315	8	3.1
	40405C or 40405CT	$405^{-0.1}_{-0.3}$	360	9	3.5
	40450C or 40450CT	$450^{-0.1}_{-0.3}$	405	10	3.9

◆ High-Force Magnetic Ways:

SGLGM-40□ □ □ C-M (without Mounting Holes on the Bottom)
SGLGM-40□ □ □ CT-M (with Mounting Holes on the Bottom)

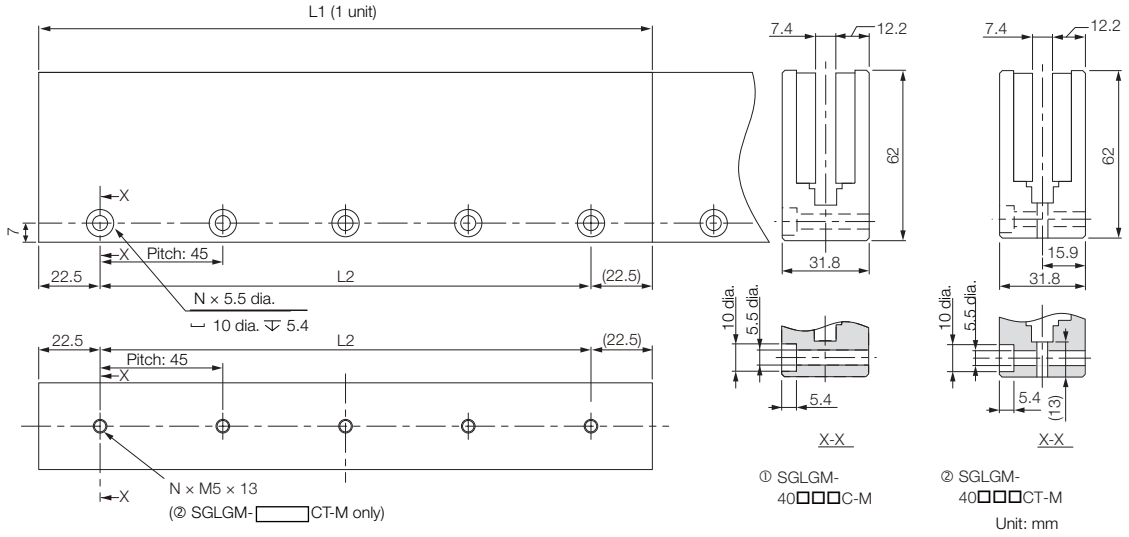

Type	Magnetic Way Model SGLGM-	L1	L2	N	Approx. Mass [kg]
High-Force	40090C-M or 40090CT-M	$90^{-0.1}_{-0.3}$	45	2	1.0
	40225C-M or 40225CT-M	$225^{-0.1}_{-0.3}$	180	5	2.6
	40360C-M or 40360CT-M	$360^{-0.1}_{-0.3}$	315	8	4.1
	40405C-M or 40405CT-M	$405^{-0.1}_{-0.3}$	360	9	4.6
	40450C-M or 40450CT-M	$450^{-0.1}_{-0.3}$	405	10	5.1

SGLGW-60

◆ Moving Coils: SGLGW-60A□ □ □ C□

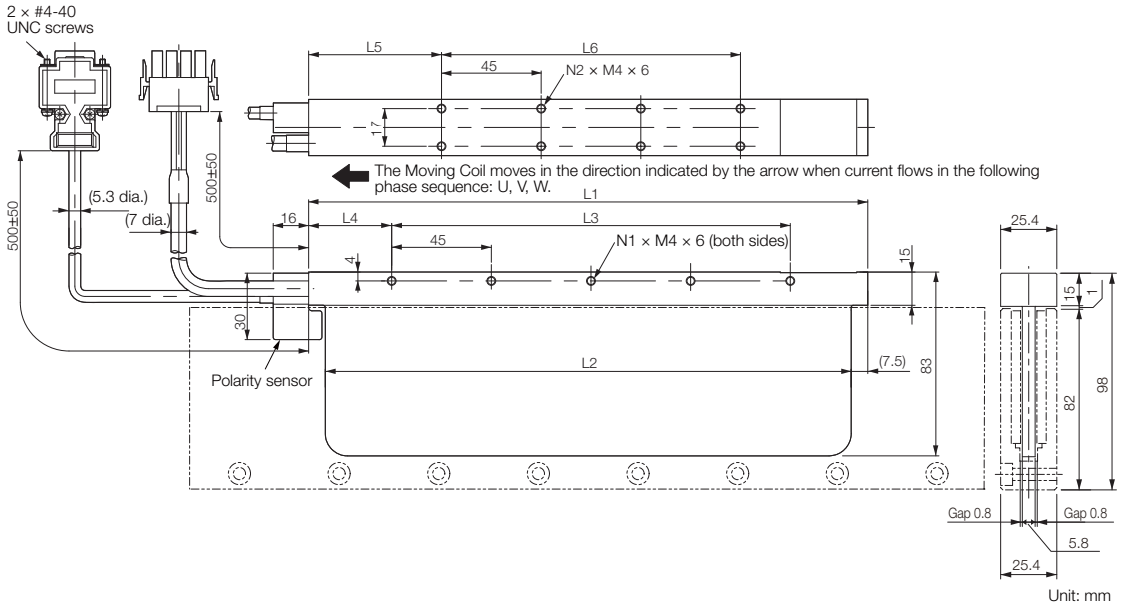

Moving Coil Model SGLGW-	L1	L2	L3	L4	L5	L6	N1	N2	Approx. Mass* [kg]
60A140C□	140	125	90	30	52.5	45	3	4	0.48
60A253C□	252.5	237.5	180	37.5	60	135	5	8	0.82
60A365C□	365	350	315	30	52.5	270	8	14	1.16

* The mass is for a Moving Coil with a Polarity Sensor.
Refer to the following section for the connector specifications for the Sensor Cable and Servo Motor Main Circuit Cable.

☞ SGLGW-40A□ □ □ C□ and -60A□ □ □ C□ Moving Coils Page 312

◆ Moving Coils: SGLGW-60A□ □ □ C□ D

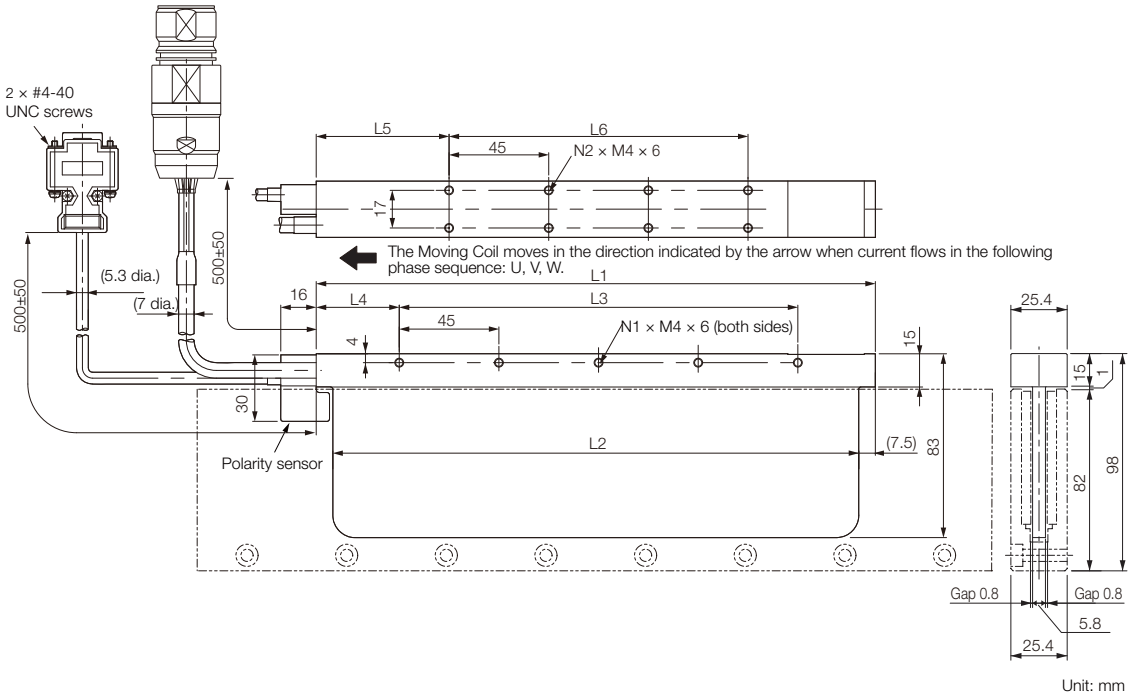

Unit: mm

Moving Coil Model SGLGW-	L1	L2	L3	L4	L5	L6	N1	N2	Approx. Mass* [kg]
60A140C□D	140	125	90	30	52.5	45	3	4	0.48
60A253C□D	252.5	237.5	180	37.5	60	135	5	8	0.82
60A365C□D	365	350	315	30	52.5	270	8	14	1.16

* The mass is for a Moving Coil with a Polarity Sensor.
Refer to the following section for the connector specifications for the Sensor Cable and Servo Motor Main Circuit Cable.

☞ SGLGW-40A□ □ □ C□ D and -60A□ □ □ C□ D Moving Coils Page 313

◆ Standard-Force Magnetic Ways:

SGLGM-60□ □ □ C (without Mounting Holes on the Bottom)
SGLGM-60□ □ □ CT (with Mounting Holes on the Bottom)

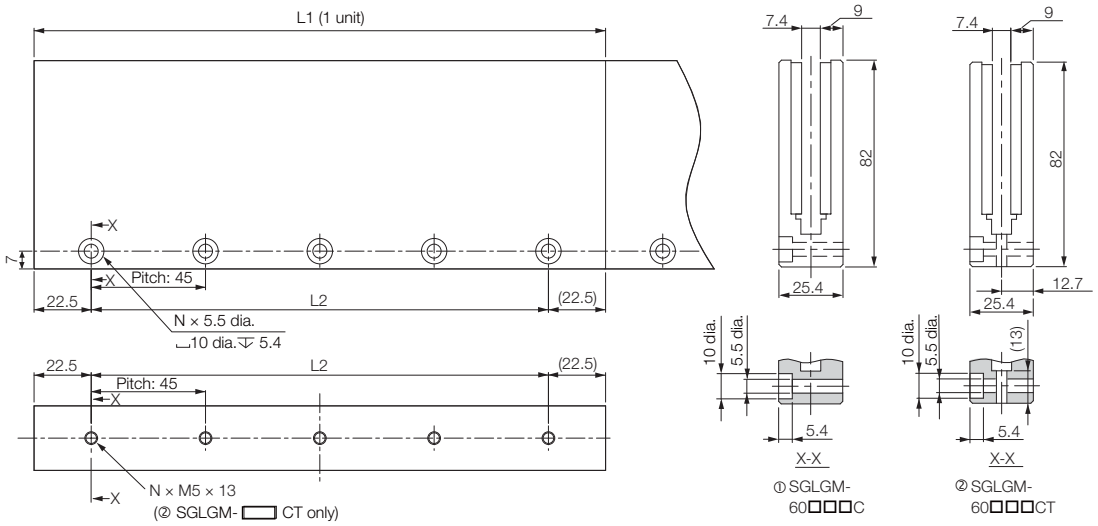

Unit: mm

Type	Magnetic Way Model SGLGM-	L1	L2	N	Approx. Mass [kg]
Standard-Force	60090C or 60090CT	$90^{-0.1}_{-0.3}$	45	2	1.1
	60225C or 60225CT	$225^{-0.1}_{-0.3}$	180	5	2.6
	60360C or 60360CT	$360^{-0.1}_{-0.3}$	315	8	4.1
	60405C or 60405CT	$405^{-0.1}_{-0.3}$	360	9	4.6
	60450C or 60450CT	$450^{-0.1}_{-0.3}$	405	10	5.1

◆ High-Force Magnetic Ways:
SGLGM-60□ □ □ C-M (without Mounting Holes on the Bottom)
SGLGM-60□ □ □ CT-M (with Mounting Holes on the Bottom)

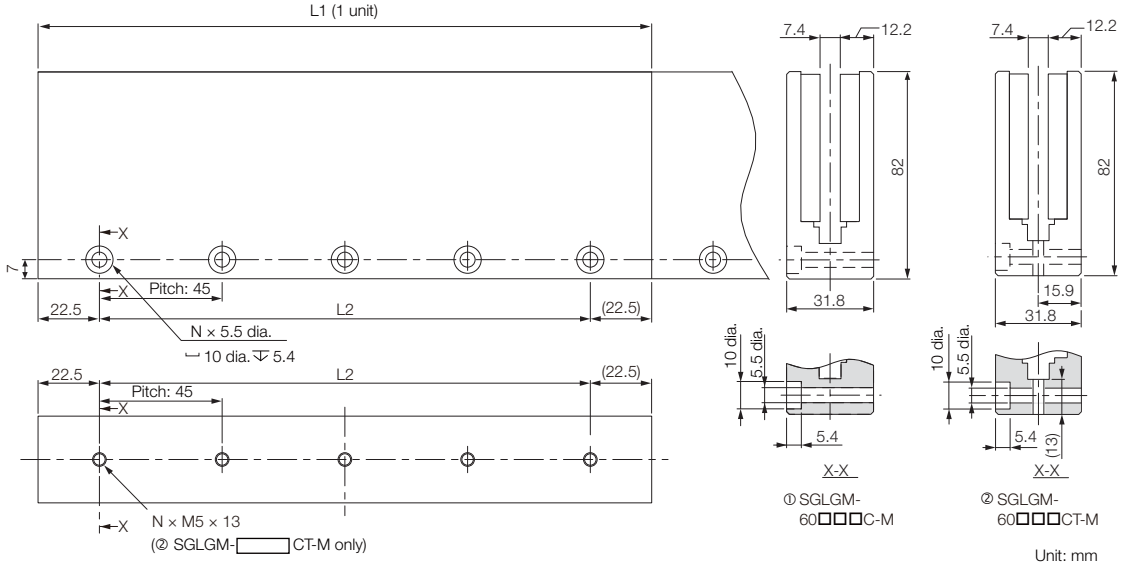

Type	Magnetic Way Model SGLGM-	L1	L2	N	Approx. Mass [kg]
High-Force	60090C-M or 60090CT-M	$90^{-0.1}_{-0.3}$	45	2	1.3
	60225C-M or 60225CT-M	$225^{-0.1}_{-0.3}$	180	5	3.3
	60360C-M or 60360CT-M	$360^{-0.1}_{-0.3}$	315	8	5.2
	60405C-M or 60405CT-M	$405^{-0.1}_{-0.3}$	360	9	5.9
	60450C-M or 60450CT-M	$450^{-0.1}_{-0.3}$	405	10	6.6

SGLGW-90

◆ Moving Coils: SGLGW-90A□ □ □ C□

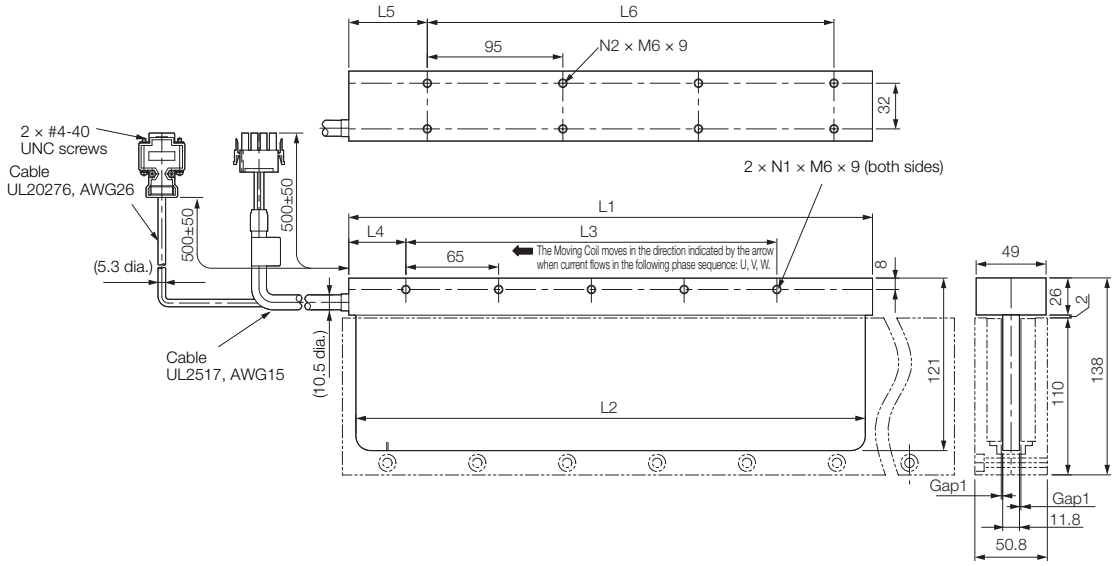

Unit: mm

Moving Coil Model SGLGW-	L1	L2	L3	L4	L5	L6	N1	N2	Approx. Mass* [kg]
90A200C□	199	189	130	40	60	95	3	4	2.2
90A370C□	367	357	260	40	55	285	5	8	3.65
90A535C□	535	525	455	40	60	380	8	10	4.95

* The mass is for a Moving Coil with a Polarity Sensor.
Refer to the following section for the connector specifications for the Sensor Cable and Servo Motor Main Circuit Cable.

☞ SGLGW-90A□ □ □ C□ Moving Coils Page 314

◆ Standard-Force Magnetic Ways: SGLGM-90□ □ □ A

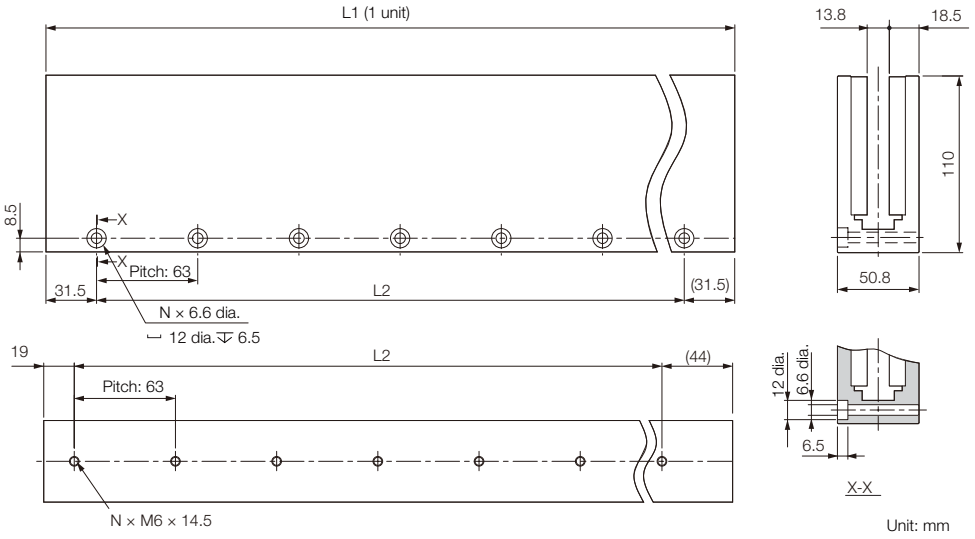

Magnetic Way Model SGLGM-	L1	L2	N	Approx. Mass [kg]
90252A	$252^{-0.1}_{-0.3}$	189	4	7.3
90504A	$504^{-0.1}_{-0.3}$	441	8	14.7

Connector Specifications

◆ SGLGW-30A□ □ □ C□ Moving Coils

• Servo Motor Connector

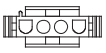

Plug: 350779-1
Pins: 350924-1 or 770672-1
Tyco Electronics Japan G.K.

Mating Connector
Cap: 350780-1
Socket: 350925-1 or 770673-1

• Polarity Sensor Connector



Pin connector: 17JE-23090-02 (D8C) -CG
From DDK Ltd.

Mating Connector
Socket connector: 17JE-13090-02 (D8C) A-CG
Studs: 17L-002C or 17L-002C1

• Polarity Sensor Output Signal

The figure on the right shows the relationship between the Su, Sv, and Sw polarity sensor output signals and the inverse power of each motor phase Vu, Vv, and Vw when the Moving Coil moves in the direction indicated by the arrow in the dimensional drawings of the Moving Coil.

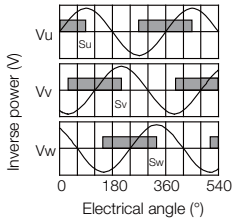

◆ SGLGW-30A□ □ □ C□ D Moving Coils

- Servo Motor Connector



Extension: SROC06JMSCN169
Pins: 021.423.1020
From Interconnectron GmbH

Mating Connector
Plug: SPUC06KFSDN236
Socket: 020.030.1020

- Polarity Sensor Connector



Pin connector: 17JE-23090-02 (D8C) -CG
From DDK Ltd.

Mating Connector
Socket connector: 17JE-13090-02 (D8C) A-CG
Studs: 17L-002C or 17L-002C1

- Polarity Sensor Output Signal

The figure on the right shows the relationship between the Su, Sv, and Sw polarity sensor output signals and the inverse power of each motor phase Vu, Vv, and Vw when the Moving Coil moves in the direction indicated by the arrow in the dimensional drawings of the Moving Coil.

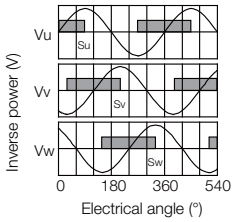

◆ SGLGW-40A□ □ □ C□ and -60A□ □ □ C□ Moving Coils

• Servo Motor Connector

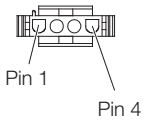

Plug: 350779-1
Pins: 350561-3 or 350690-3 (No.1 to 3)
350654-1 or 350669-1 (No. 4)
Tyco Electronics Japan G.K.

Mating Connector
Cap: 350780-1
Socket: 350570-3 or 350689-3

• Polarity Sensor Connector



Pin connector: 17JE-23090-02 (D8C) -CG
From DDK Ltd.

Mating Connector
Socket connector: 17JE-13090-02 (D8C) A-CG
Studs: 17L-002C or 17L-002C1

• Polarity Sensor Output Signal

The figure on the right shows the relationship between the Su, Sv, and Sw polarity sensor output signals and the inverse power of each motor phase Vu, Vv, and Vw when the Moving Coil moves in the direction indicated by the arrow in the dimensional drawings of the Moving Coil.

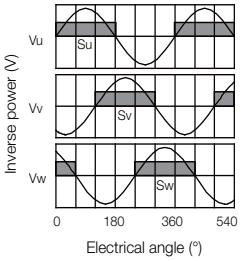

◆ SGLGW-40A□ □ □ C□ D and -60A□ □ □ C□ D Moving Coils

• Servo Motor Connector



Extension: SROC06JMSCN169
Pins: 021.423.1020
From Interconnectron GmbH

Mating Connector
Plug: SPUC06KFSDN236
Socket: 020.030.1020

• Polarity Sensor Connector



Pin connector: 17JE-23090-02 (D8C) -CG
From DDK Ltd.

Mating Connector
Socket connector: 17JE-13090-02 (D8C) A-CG
Studs: 17L-002C or 17L-002C1

• Polarity Sensor Output Signal

The figure on the right shows the relationship between the Su, Sv, and Sw polarity sensor output signals and the inverse power of each motor phase Vu, Vv, and Vw when the Moving Coil moves in the direction indicated by the arrow in the dimensional drawings of the Moving Coil.

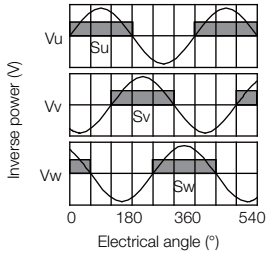

◆ SGLGW-90A□ □ □ C□ Moving Coils

• Servo Motor Connector

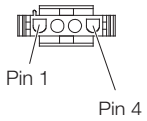

Plug: 350779-1
Pins: 350218-3 or 350547-3 (No.1 to 3)
350654-1 or 350669-1 (No. 4)
Tyco Electronics Japan G.K.

Mating Connector
Cap: 350780-1
Socket: 350537-3 or 350550-3

• Polarity Sensor Connector



Pin connector: 17JE-23090-02 (D8C) -CG
From DDK Ltd.

Mating Connector
Socket connector: 17JE-13090-02 (D8C) A-CG
Stud: 17L-002C or 17L-002C1

• Polarity Sensor Output Signal

The figure on the right shows the relationship between the Su, Sv, and Sw polarity sensor output signals and the inverse power of each motor phase Vu, Vv, and Vw when the Moving Coil moves in the direction indicated by the arrow in the dimensional drawings of the Moving Coil.

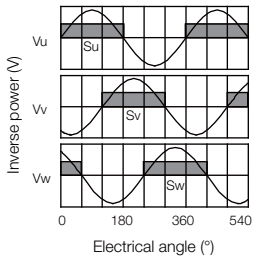

Selecting Cables

◆ Cable Configurations

Example: SGLG Coreless Servo Motors

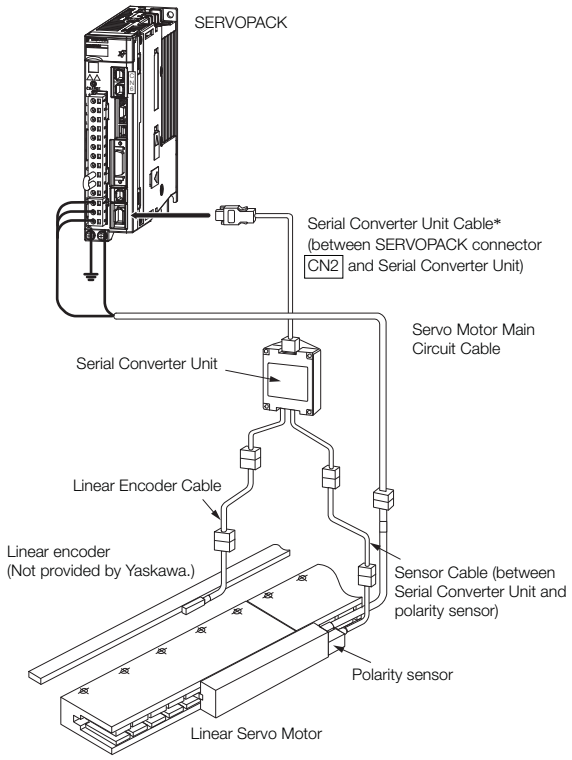

* You can connect directly to an absolute linear encoder.

Note: 1. The above system configurations are for SGLG Coreless Servo Motors. Refer to the manual for the Linear Servo Motor for configurations with other models.

2. Refer to the following manual for the following information.
   - Cable dimensional drawings and cable connection specifications
   - Order numbers and specifications of individual connectors for cables
   - Order numbers and specifications for wiring materials

   📖 *Σ-7-Series AC Servo Drive Peripheral Device Selection Manual* (Manual No.: SIEP S800001 32)

Servo Motor Main Circuit Cables

Servo Motor Model	Length (L)	Order Number	Appearance
SGLGW-30A, -40A, -60A	1 m	JZSP-CLN11-01-E	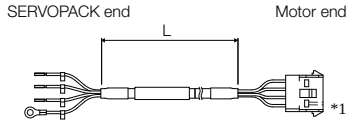
	3 m	JZSP-CLN11-03-E	
	5 m	JZSP-CLN11-05-E	
	10 m	JZSP-CLN11-10-E	
	15 m	JZSP-CLN11-15-E	
	20 m	JZSP-CLN11-20-E	
SGLGW-90A	1 m	JZSP-CLN21-01-E	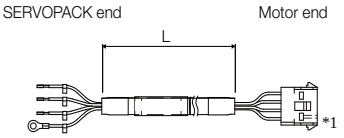
	3 m	JZSP-CLN21-03-E	
	5 m	JZSP-CLN21-05-E	
	10 m	JZSP-CLN21-10-E	
	15 m	JZSP-CLN21-15-E	
	20 m	JZSP-CLN21-20-E	
SGLGW- 30A□ □ □ □ □ D - 40A□ □ □ □ □ D - 60A□ □ □ □ □ D	1 m	JZSP-CLN14-01-E	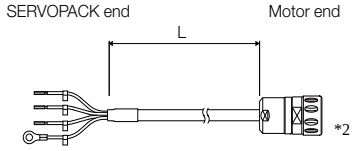
	3 m	JZSP-CLN14-03-E	
	5 m	JZSP-CLN14-05-E	
	10 m	JZSP-CLN14-10-E	
	15 m	JZSP-CLN14-15-E	
	20 m	JZSP-CLN14-20-E	

Note: Shaded model numbers are non-stock items

*1. Connector from Tyco Electronics Japan G.K.

*2. Connector from Interconnectron GmbH

*3. A connector is not provided on the Linear Servo Motor end. Obtain a connector according to your specifications. Refer to the next page for information on connectors.

Linear Encoder Cables

Name	Servo Motor Model	Length* (L)	Order Number	Appearance
For linear encoder from Renishaw PLC	All Models	1 m	JZSP-CLL00-01-E	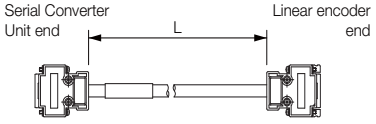
		3 m	JZSP-CLL00-03-E	
		5 m	JZSP-CLL00-05-E	
		10 m	JZSP-CLL00-10-E	
		15 m	JZSP-CLL00-15-E	
For linear encoder from Heidenhain Corporation		1 m	JZSP-CLL30-01-E	
		3 m	JZSP-CLL30-03-E	
		5 m	JZSP-CLL30-05-E	
		10 m	JZSP-CLL30-10-E	
		15 m	JZSP-CLL30-15-E	

* When using a JZDP-J00□ -□ □ □ -E Serial Converter Unit, do not exceed a cable length of 3 m.

Serial Converter Unit Cables

Servo Motor Model	Length (L)	Order Number	Appearance
All Models	1 m	JZSP-CLP70-01-E	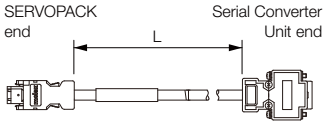
	3 m	JZSP-CLP70-03-E	
	5 m	JZSP-CLP70-05-E	
	10 m	JZSP-CLP70-10-E	
	15 m	JZSP-CLP70-15-E	
	20 m	JZSP-CLP70-20-E	

Sensor Cables

Servo Motor Model	Length (L)	Order Number	Appearance
SGLGW-□ □ A	1 m	JZSP-CLL10-01-E	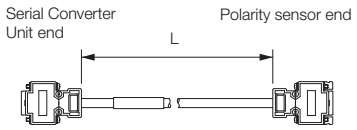
	3 m	JZSP-CLL10-03-E	
	5 m	JZSP-CLL10-05-E	
	10 m	JZSP-CLL10-10-E	
	15 m	JZSP-CLL10-15-E	

SGLT (Models with T-type Iron Cores)

Model Designations

Moving Coil

S G L T W - 20 A 170 A P □

Linear Σ Series Linear Servo Motors

1st digit | 2nd digit | 3rd+4th digits | 5th digit | 6th+7th+8th digits | 9th digit | 10th digit | 11th digit

1st digit Servo Motor Type

Code	Specification
T	With T-type iron core

2nd digit Moving Coil/Magnetic Way

Code	Specification
W	Moving Coil

3rd+4th digits Magnet Height

Code	Specification
20	20 mm
35	36 mm
40	40 mm
50	51 mm
80	76.5 mm

5th digit Power Supply Voltage

Code	Specification
A	200 VAC

6th+7th+8th digits Length of Moving Coil

Code	Specification
170	170 mm
320	315 mm
400	394.2 mm
460	460 mm
600	574.2 mm

9th digit Design Revision Order

A, B …
H: High-efficiency model

10th digit Sensor Specification and Cooling Method

Code	Specifications		Applicable Models
	Polarity Sensor	Cooling Method	
None	None	Self-cooled	All models
C*	None	Water-cooled	SGLTW-40, -80
H*	Yes	Water-cooled	
P	Yes	Self-cooled	All models

11th digit Connector for Servo Motor Main Circuit Cable

Code	Specification	Applicable Models
None	Connector from Tyco Electronics Japan G.K.	SGLTW-20A□□□□□, -35A□□□□□
	MS connector	SGLTW-40A□□□B□, -80A□□□B□
	Loose lead wires with no connector	SGLTW-35A□□□H□, -50A□□□H□

■ Non Stock Items

* Contact your Yaskawa representative for the characteristics, dimensions, and other details on Servo Motors with these specifications.

Note: This information is provided to explain model numbers. It is not meant to imply that models are available for all combinations of codes.

Magnetic Way

S G L T M - 20 324 A □

Linear Σ Series Linear Servo Motors

1st digit | 2nd digit | 3rd+4th digits | 5th+6th+7th digits | 8th digit | 9th digit

1st digit Servo Motor Type

(Same as for the Moving Coil.)

2nd digit Moving Coil/Magnetic Way

Code	Specification
M	Magnetic Way

3rd+4th digits Magnet Height

(Same as for the Moving Coil.)

5th+6th+7th digits Length of Magnetic Way

Code	Specification
324	324 mm
405	405 mm
540	540 mm
675	675 mm
756	756 mm
945	945 mm

8th digit Design Revision Order

A, B …
H: High-efficiency model

9th digit Options

Code	Specification	Applicable Models
None	Without options	–
C	With magnet cover	All models
Y	With base and magnet cover	SGLTM-20, -35*, -40, -80

■ Non Stock Items

* The SGLTM-35□ □ □ H (high-efficiency models) do not support this specification.

Note: This information is provided to explain model numbers. It is not meant to imply that models are available for all combinations of codes.

Precautions on Moving Coils with Polarity Sensors

Note

When you use a Moving Coil with a Polarity Sensor, the Magnetic Way must cover the bottom of the polarity sensor. Refer to the example that shows the correct installation.
When determining the length of the Moving Coil's stroke or the length of the Magnetic Way, consider the total length of the Moving Coil and the polarity sensor. Refer to the following table.

Correct Installation

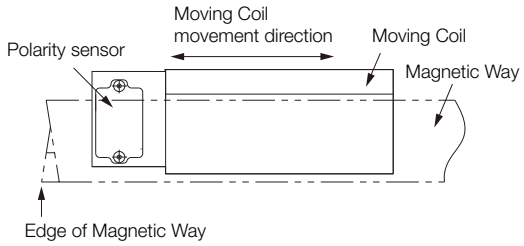

Incorrect Installation

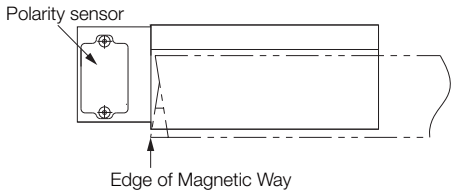

◆ Total Length of Moving Coil with Polarity Sensor

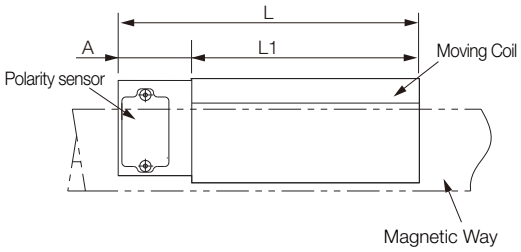

Moving Coil Model SGLTW-	Length of Moving Coil, L1 [mm]	Length of Polarity Sensor, A [mm]	Total Length, L [mm]
20A170AP□	170	34	204
20A320AP□	315		349
20A460AP□	460		494
35A170AP□	170	34	204
35A320AP□	315		349
35A460AP□	460		494
35A170HP□	170	34	204
35A320HP□	315		349
50A170HP□	170	34	204
50A320HP□	315		349
40A400BH□ 40A400BP□	394.2	26	420.2
40A600BH□ 40A600BP□	574.2	26	600.2
80A400BH□ 80A400BP□	394.2	26	420.2
80A600BH□ 80A600BP□	574.2	26	600.2

Specifications and Ratings

Specifications

Linear Servo Motor Moving Coil Model SGLTW-		Standard Models										High-efficiency Models			
		20A			35A			40A		80A		35A		50A	
		170A	320A	460A	170A	320A	460A	400B	600B	400B	600B	170H	320H	170H	320H
Time Rating		Continuous													
Thermal Class		B													
Insulation Resistance		500 VDC, 10 MΩ min.													
Withstand Voltage		1,500 VAC for 1 minute													
Excitation		Permanent magnet													
Cooling Method		Self-cooled													
Protective Structure		IP00													
Environmental Conditions	Surrounding Air Temperature	0°C to 40°C (with no freezing)													
	Surrounding Air Humidity	20% to 80% relative humidity (with no condensation)													
	Installation Site	• Must be indoors and free of corrosive and explosive gases. • Must be well-ventilated and free of dust and moisture. • Must facilitate inspection and cleaning. • Must have an altitude of 1,000 m or less. • Must be free of strong magnetic fields.													
Shock Resistance	Impact Acceleration Rate	196 m/s^2													
	Number of Impacts	2 times													
Vibration Resistance	Vibration Acceleration Rate	49 m/s^2 (the vibration resistance in three directions, vertical, side-to-side, and front-to-back)													

Ratings

Linear Servo Motor Moving Coil Model SGLTW-		Standard Models										High-efficiency Models			
		20A			35A			40A		80A		35A		50A	
		170A	320A	460A	170A	320A	460A	400B	600B	400B	600B	170H	320H	170H	320H
Rated Motor Speed (Reference Speed during Speed Control)*1		3.0	3.0	3.0	2.5	2.5	2.5	1.5	2.0	2.0	2.0	2.5	2.0	2.0	2.0
Maximum Speed*1	m/s	5.0	5.0	5.0	5.0	5.0	5.0	3.1	3.1	2.5	2.5	4.8	4.8	3.2	3.1
Rated Force*1, *2	N	130	250	380	220	440	670	670	1000	1300	2000	300	600	450	900
Maximum Force*1	N	380	760	1140	660	1320	2000	2600	4000	5000	7500	600	1200	900	1800
Rated Current*1	Arms	2.3	4.4	6.7	3.5	7.0	10.7	7.3	10.9	11.1	17.1	5.1	10.1	5.1	10.2
Maximum Current*1	Arms	7.7	15.4	23.2	12.1	24.2	36.7	39.4	60.6	57.9	86.9	11.9	23.9	11.8	23.6
Moving Coil Mass	kg	2.5	4.6	6.7	3.7	6.8	10	15	23	24	35	4.9	8.8	6.0	11
Force Constant	N/Arms	61.0	61.0	61.0	67.5	67.5	67.5	99.1	99.1	126	126	64.0	64.0	95.2	95.2
BEMF Constant	Vrms/(m/s)/phase	20.3	20.3	20.3	22.5	22.5	22.5	33.0	33.0	42.0	42.0	21.3	21.3	31.7	31.7
Motor Constant	N/$\sqrt{W}$	18.7	26.5	32.3	26.7	37.5	46.4	61.4	75.2	94.7	116	37.4	52.9	48.6	68.7
Electrical Time Constant	ms	5.9	5.9	5.9	6.9	6.8	6.9	15	15	17	17	15	16	16	17
Mechanical Time Constant	ms	7.1	6.6	6.4	5.2	4.8	4.6	4.0	4.1	2.7	2.6	3.5	3.1	2.5	2.4
Thermal Resistance (with Heat Sink)	K/W	1.01	0.49	0.38	0.76	0.44	0.32	0.24	0.20	0.22	0.18	0.76	0.40	0.61	0.30
Thermal Resistance (without Heat Sink)	K/W	1.82	1.11	0.74	1.26	0.95	0.61	0.57	0.40	0.47	0.33	1.26	0.83	0.97	0.80
Magnetic Attraction*3	N	0	0	0	0	0	0	0	0	0	0	0	0	0	0
Magnetic Attraction on One Side*4	N	800	1590	2380	1400	2780	4170	3950	5890	7650	11400	1400	2780	2000	3980
Combined Magnetic Way, SGLTM-		20□ □ □ A□			35□ □ □ A□			40□□□A□		80□ □ □ A□		35□ □ □ H□		50□ □ □ H□	
Combined Serial Converter Unit, JZDP-□ □ □ □ -		011	012	013	014	015	016	185	186	187	188	105	106	108	109
Applicable SERVOPACKs	SGD7S-	3R8A	7R6A	120A	5R5A	120A	180A	180A	330A	330A	550A	5R5A	120A	5R5A	120A
	SGD7W-	5R5A	7R6A	–	5R5A	–	–	–	–	–	–	5R5A	–	5R5A	–

*1. These values are for operation in combination with a SERVOPACK when the temperature of the armature winding is 100°C. The values for other items are at 20°C. These are typical values.

*2. The rated forces are the continuous allowable force values at a surrounding air temperature of 40°C with an aluminum heat sink of the dimensions given in the following table.
- Heat Sink Dimensions
  - 254 mm × 254 mm × 25 mm: SGLTW-20A170A and -35A170A
  - 400 mm × 500 mm × 40 mm: SGLTW-20A320A, -20A460A, -35A170H, -35A320A, -35A320H, -35A460A, and -50A170H
  - 609 mm × 762 mm × 50 mm: SGLTW-40A400B, -40A600B, -50A320H, -80A400B, and -80A600B

*3. The unbalanced magnetic gap that results from the Moving Coil installation condition causes a magnetic attraction on the Moving Coil.

*4. The value that is given is the magnetic attraction that is generated on one side of the Magnetic Way.

Force-Motor Speed Characteristics

A : Continuous duty zone ———— (solid lines): With three-phase 200-V input
B : Intermittent duty zone - - - - - - - - (dotted lines): With single-phase 200-V input

■ Standard Models

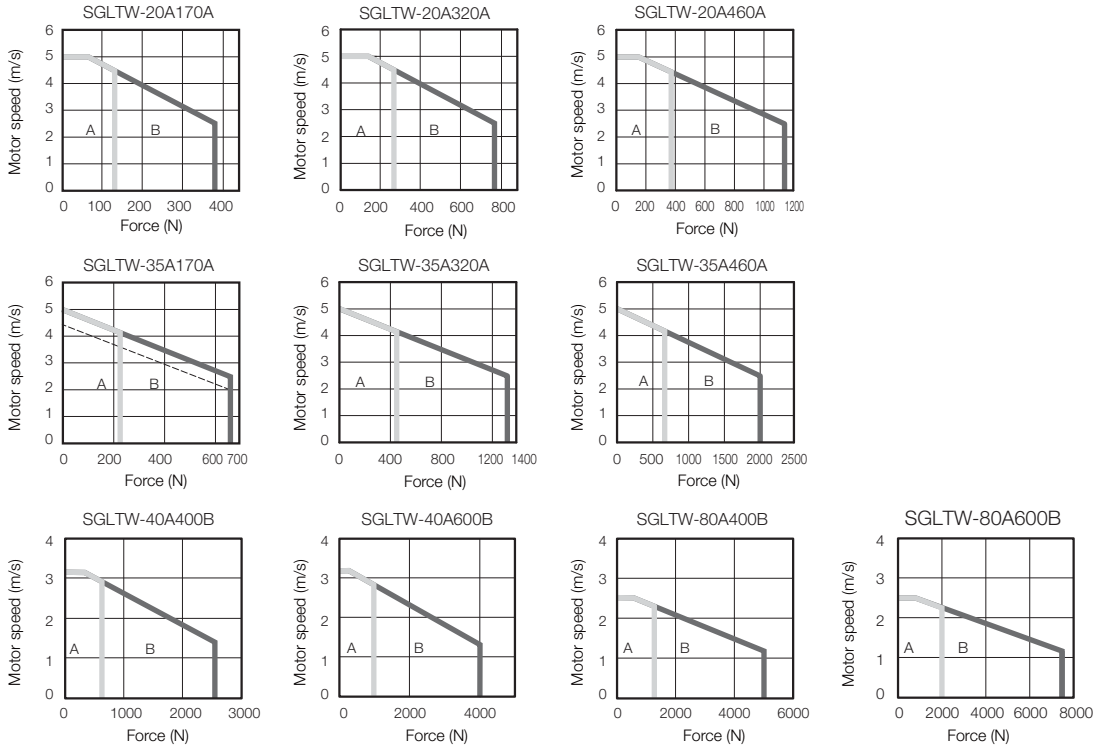

■ High-efficiency Models

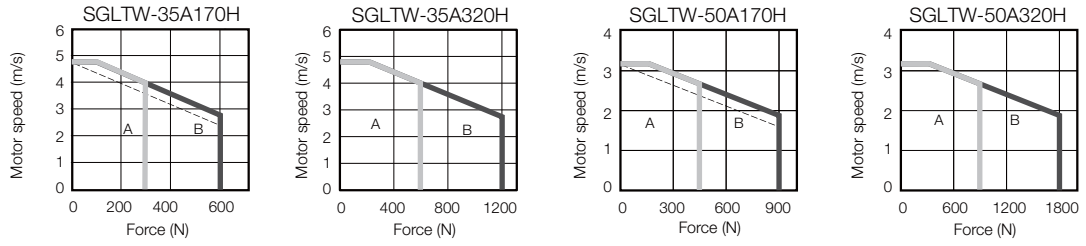

Note: 1. These values are for operation in combination with a SERVOPACK when the temperature of the armature winding is 100°C. These are typical values.
2. The characteristics in the intermittent duty zone depend on the power supply voltage.
3. If the effective force is within the allowable range for the rated force, the Servo Motor can be used within the intermittent duty zone.
4. If you use a Servo Motor Main Circuit Cable that exceeds 20 m, the intermittent duty zone in the torque-motor speed characteristics will become smaller because the voltage drop increases.

Servo Motor Overload Protection Characteristics

The overload detection level is set for hot start conditions with a Servo Motor surrounding air temperature of 40°C.

SGLTW-20A□□□A and -35A□□□A

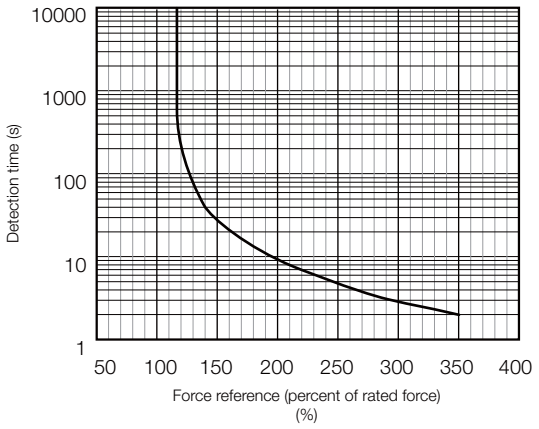

SGLTW-40A□□□B and -80A□□□B

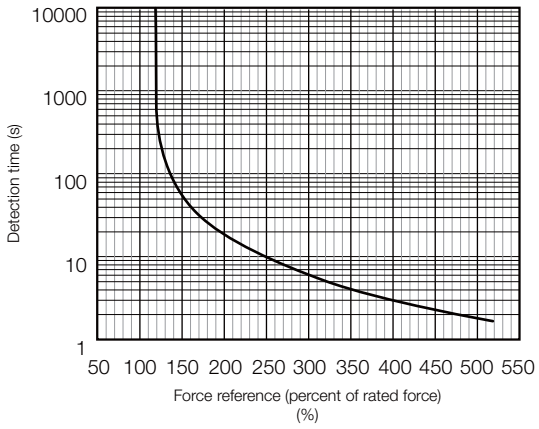

SGLTW-35A□□□H and -50A□□□H

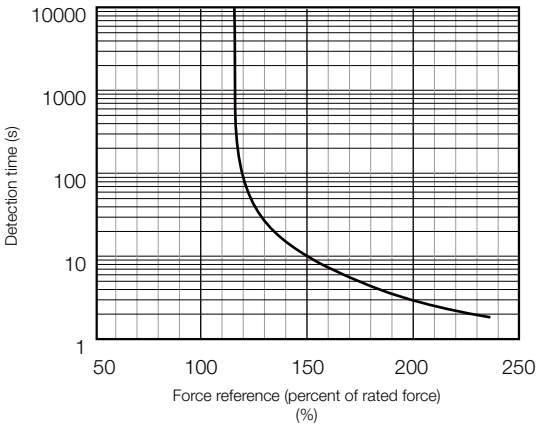

Note: The above overload protection characteristics do mean that you can perform continuous duty operation with an output of 100% or higher. Use the Servo Motor so that the effective force remains within the continuous duty zone given in *Force-Motor Speed Characteristics* on page 322.

External Dimensions

SGLTW-20: Standard Models

◆ Moving Coils: SGLTW-20A□ □ □ A□

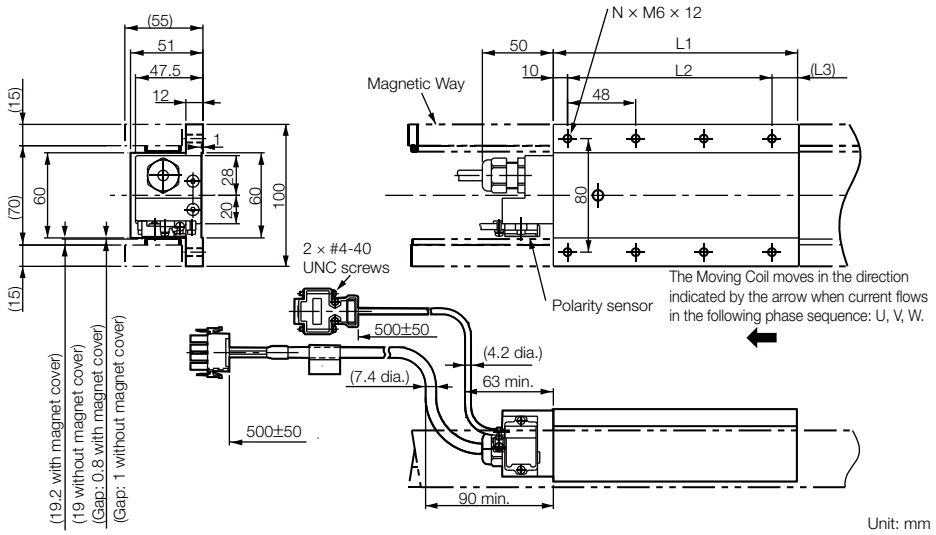

Unit: mm

Moving Coil Model SGLTW-	L1	L2	(L3)	N	Approx. Mass [kg]
20A170A□	170	144 (48 × 3)	(16)	8	2.5
20A320A□	315	288 (48 × 6)	(17)	14	4.6
20A460A□	460	432 (48 × 9)	(18)	20	6.7

Refer to the following section for the connector specifications for the Sensor Cable and Servo Motor Main Circuit Cable.

☞ SGLTW-20A□ □ □ A□ and -35A□ □ □ A□ Moving Coils (page 340)

◆ Magnetic Ways: SGLTM-20□ □ □ A

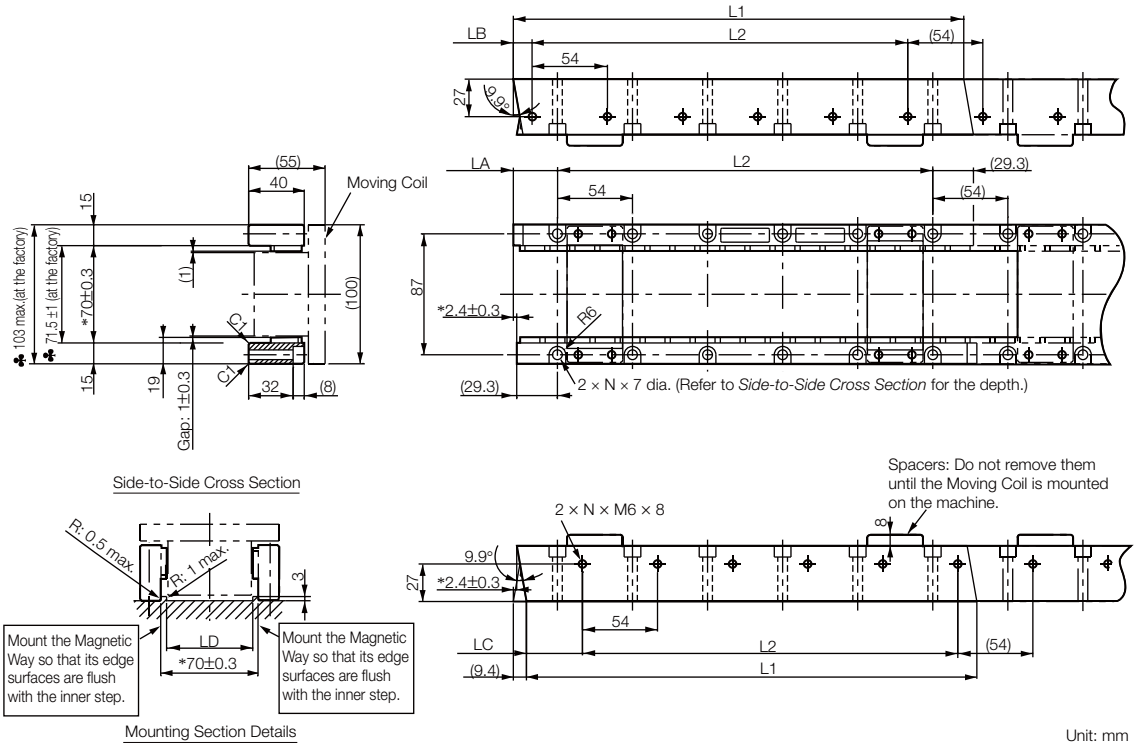

Unit: mm

Note: 1. Two Magnetic Way tracks are used together as a set. For safety, when they are shipped, the two tracks are secured to a mounting spacer made from aluminum.

2. More than one Magnetic Way can be connected.

3. Dimensions with asterisks are the distances between the Magnetic Way tracks. Install the tracks according to the specified dimensions. Observe the dimensions given in Mounting Section Details after installation. Dimensions when the Magnetic Way is shipped from the factory are indicated by ♣.

4. Use socket head screws of strength class 10.9 or higher for the Magnetic Way mounting screws. (Do not use stainless steel screws.)

Magnetic Way Model SGLTM-	L1	L2	LA	LB	LC	LD	N	Approx. Mass [kg]
20324A□	$324^{-0.1}_{-0.3}$	270 (54 × 5)	$31.7^{0}_{-0.2}$	$13.7^{0}_{-0.2}$	$40.3^{0}_{-0.2}$	$62^{+0.6}_{0}$	6	3.4
20540A□	$540^{-0.1}_{-0.3}$	486 (54 × 9)	$31.7^{0}_{-0.2}$	$13.7^{0}_{-0.2}$	$40.3^{0}_{-0.2}$	$62^{+0.6}_{0}$	10	5.7
20756A□	$756^{-0.1}_{-0.3}$	702 (54 × 13)	$31.7^{0}_{-0.2}$	$13.7^{0}_{-0.2}$	$40.3^{0}_{-0.2}$	$62^{+0.6}_{0}$	14	7.9

◆ Magnetic Ways with Bases: SGLTM-20□ □ □ AY

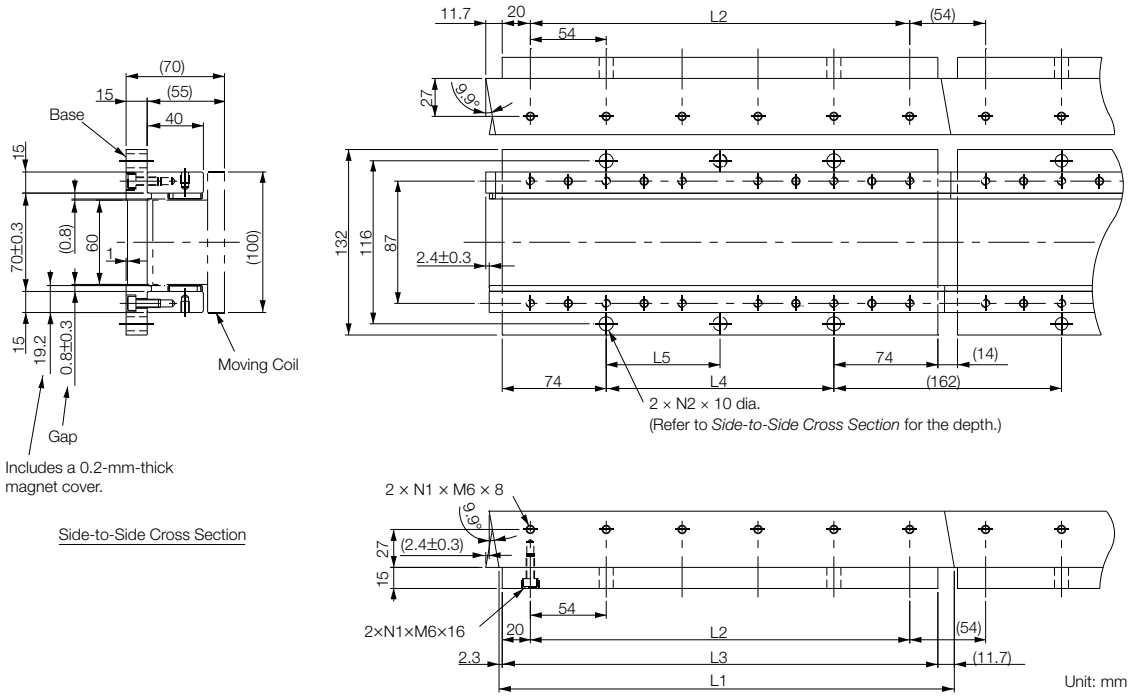

Note: Two Magnetic Way tracks are used together as a set. More than one Magnetic Way can be connected.

Magnetic Way Model SGLTM-	L1	L2	L3	L4	L5	N1	N2	Approx. Mass [kg]
20324AY	$324^{-0.1}_{-0.3}$	270	310	162	162	6	2	5.1
20540AY	$540^{-0.1}_{-0.3}$	486	526	378	189	10	3	8.5
20756AY	$756^{-0.1}_{-0.3}$	702	742	594	198	14	4	12

SGLTW-35: Standard Models

◆ Moving Coils: SGLTW-35A□ □ □ A□

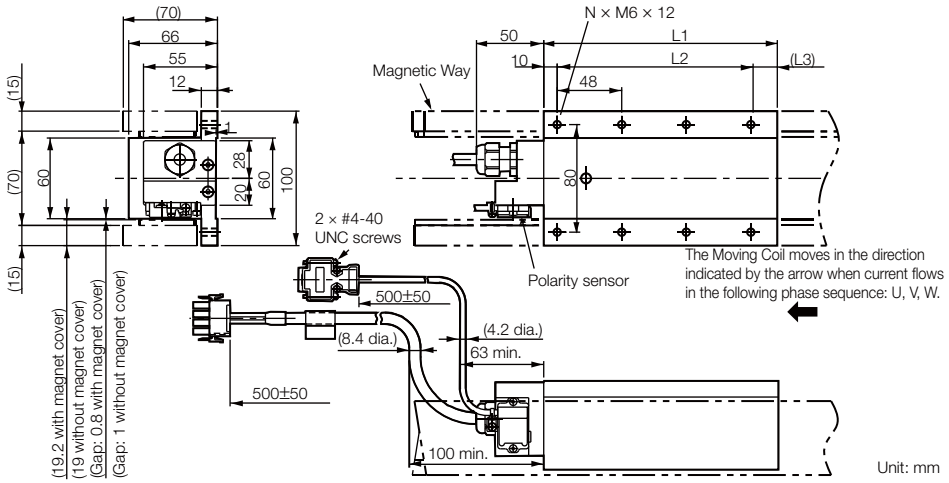

Moving Coil Model SGLTW-	L1	L2	(L3)	N	Approx. Mass [kg]
35A170A□	170	144 (48 × 3)	(16)	8	3.7
35A320A□	315	288 (48 × 6)	(17)	14	6.8
35A460A□	460	432 (48 × 9)	(18)	20	10

Refer to the following section for the connector specifications for the Sensor Cable and Servo Motor Main Circuit Cable.

☞ SGLTW-20A□ □ □ A□ and -35A□ □ □ A□ Moving Coils (page 340)

◆ Magnetic Ways: SGLTM-35□ □ □ A□

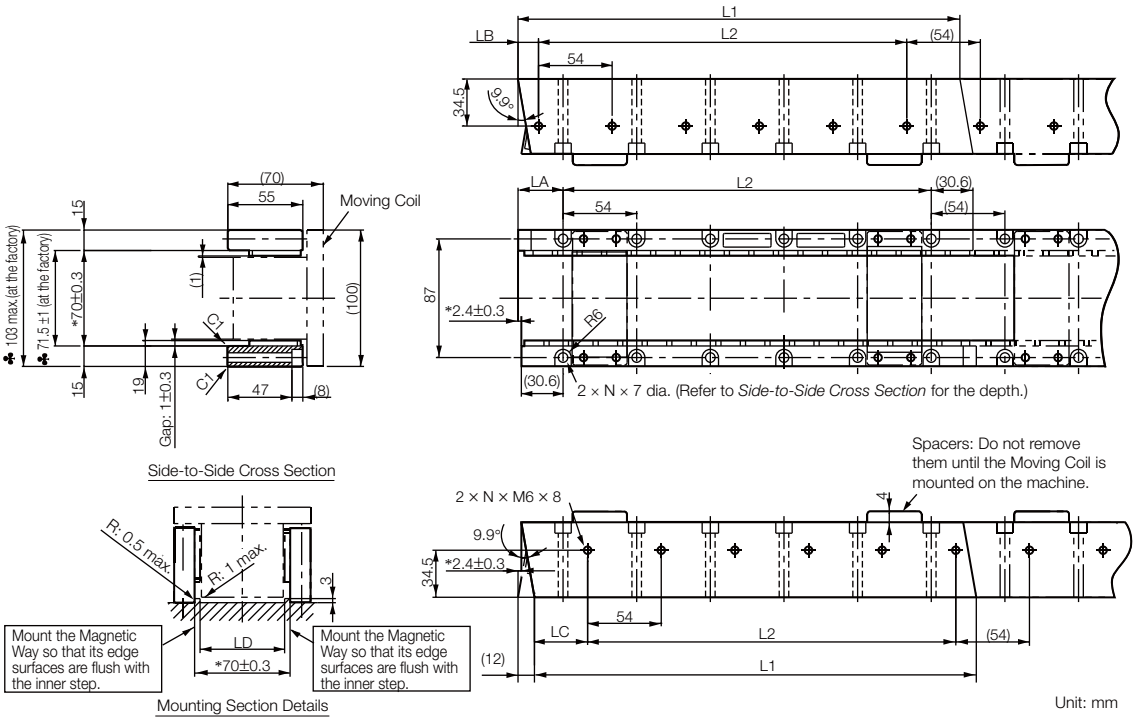

Note: 1. Two Magnetic Way tracks are used together as a set. For safety, when they are shipped, the two tracks are secured to a mounting spacer made from aluminum.

2. More than one Magnetic Way can be connected.

3. Dimensions with asterisks are the distances between the Magnetic Way tracks. Install the tracks according to the specified dimensions. Observe the dimensions given in Mounting Section Details after installation. Dimensions when the Magnetic Way is shipped from the factory are indicated by ♣.

4. Use socket head screws of strength class 10.9 or higher for the Magnetic Way mounting screws. (Do not use stainless steel screws.)

Magnetic Way Model SGLTM-	L1	L2	LA	LB	LC	LD	N	Approx. Mass [kg]
35324A□	324 $^{-0.1}_{-0.3}$	270 (54 × 5)	33 $^{0}_{-0.2}$	15 $^{0}_{-0.2}$	39 $^{0}_{-0.2}$	62 $^{+0.6}_{0}$	6	4.8
35540A□	540 $^{-0.1}_{-0.3}$	486 (54 × 9)	33 $^{0}_{-0.2}$	15 $^{0}_{-0.2}$	39 $^{0}_{-0.2}$	62 $^{+0.6}_{0}$	10	8
35756A□	756 $^{-0.1}_{-0.3}$	702 (54 × 13)	33 $^{0}_{-0.2}$	15 $^{0}_{-0.2}$	39 $^{0}_{-0.2}$	62 $^{+0.6}_{0}$	14	11

◆ Magnetic Ways with Bases: SGLTM-35□ □ □ AY

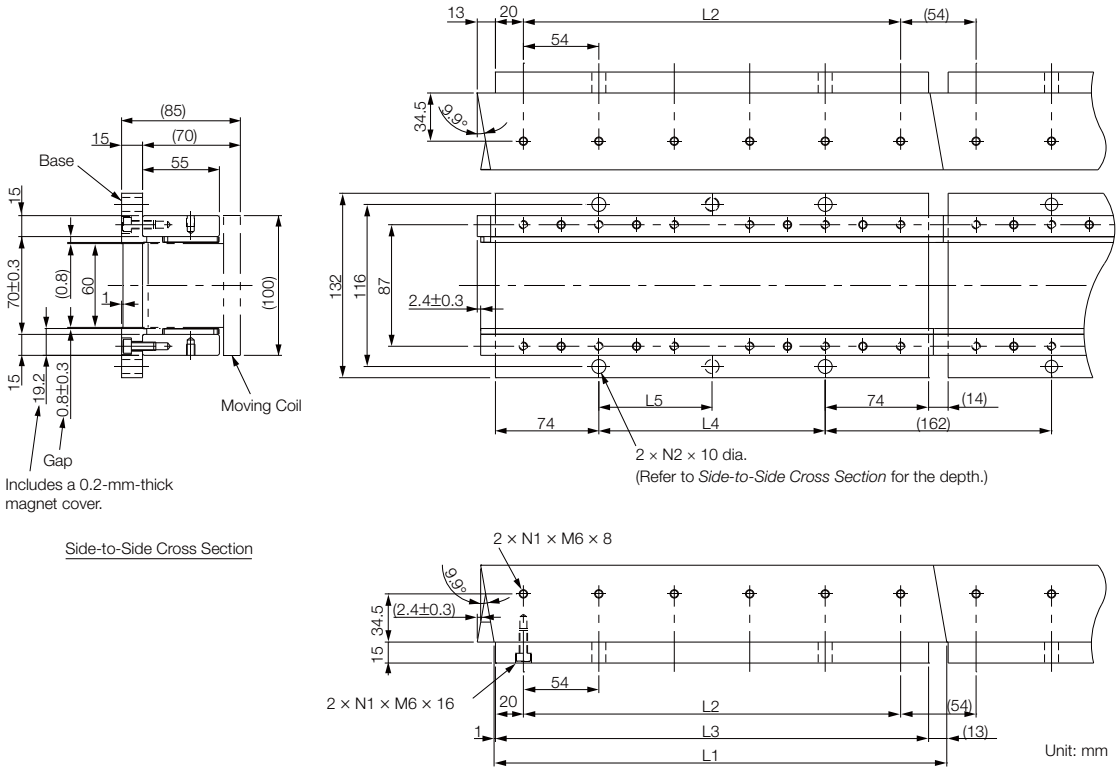

Note: Two Magnetic Way tracks are used together as a set. More than one Magnetic Way can be connected.

Magnetic Way Model SGLTM-	L1	L2	L3	L4	L5	N1	N2	Approx. Mass [kg]
35324AY	$324^{-0.1}_{-0.3}$	270	310	162	162	6	2	6.4
35540AY	$540^{-0.1}_{-0.3}$	486	526	378	189	10	3	11
35756AY	$756^{-0.1}_{-0.3}$	702	742	594	198	14	4	15

SGLTW-35□ □ □ □ H□ : High-Efficiency Models

◆ Moving Coils: SGLTW-35A□ □ □ H□

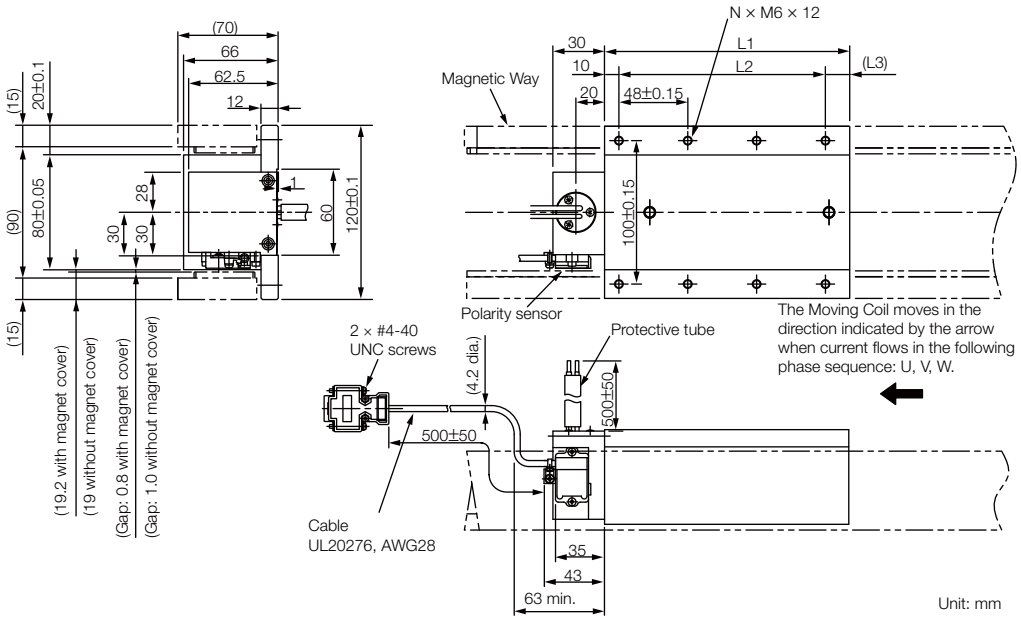

Moving Coil Model SGLTW-	L1	L2	L3	N	Approx. Mass [kg]
35A170H□	170	144 (48 × 3)	(16)	8	4.7
35A320H□	315	288 (48 × 6)	(17)	14	8.8

Refer to the following section for the connector specifications for the Sensor Cable and Servo Motor Main Circuit Cable.

☞ SGLTW-35A□ □ □ H□ and -50A□ □ □ H□ Moving Coils (page 342)

◆ Magnetic Ways: SGLTM-35□ □ □ H□

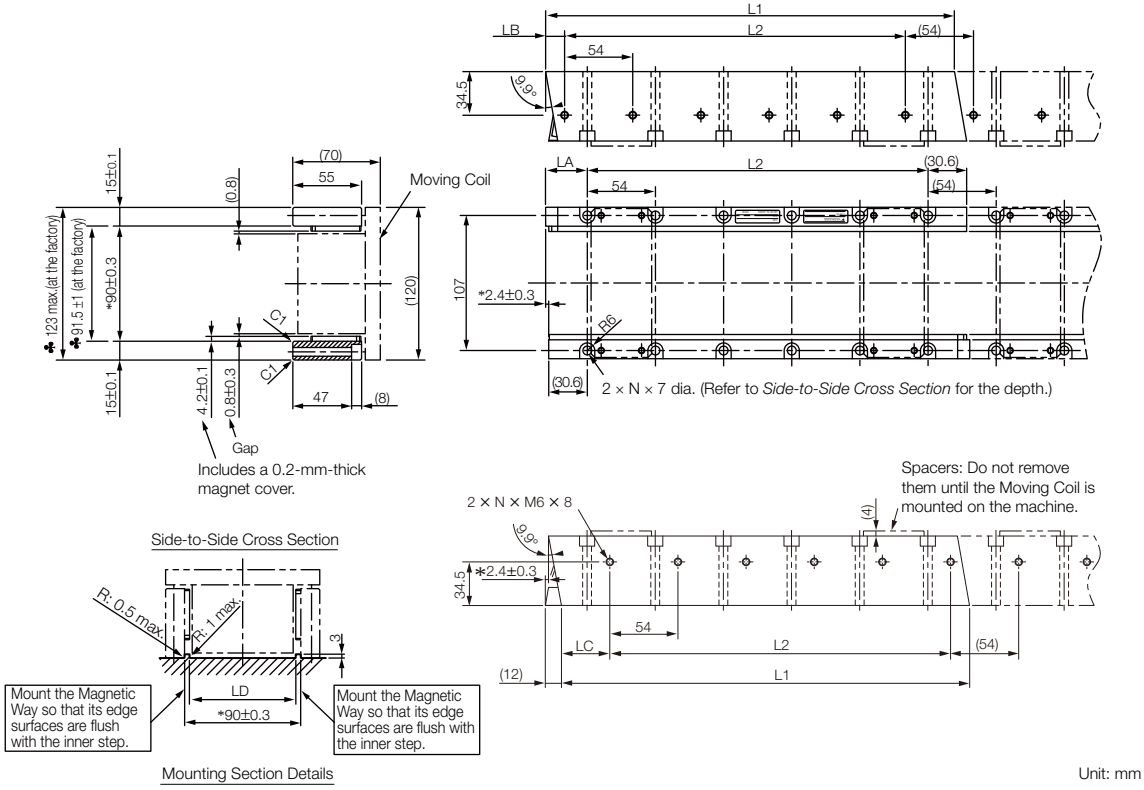

Note: 1. Two Magnetic Way tracks are used together as a set. For safety, when they are shipped, the two tracks are secured to a mounting spacer made from aluminum.

2. More than one Magnetic Way can be connected.

3. Dimensions with asterisks are the distances between the Magnetic Way tracks. Install the tracks according to the specified dimensions. Observe the dimensions given in Mounting Section Details after installation. Dimensions when the Magnetic Way is shipped from the factory are indicated by ♣.

4. Use socket head screws of strength class 10.9 or higher for the Magnetic Way mounting screws. (Do not use stainless steel screws.)

Magnetic Way Model SGLTM-	L1	L2	LA	LB	LC	LD	N	Approx. Mass [kg]
35324H□	$324^{-0.1}_{-0.3}$	270 (54 × 5)	$33^{0}_{-0.2}$	$15^{0}_{-0.2}$	$39^{0}_{-0.2}$	$82^{+0.6}_{0}$	6	4.8
35540H□	$540^{-0.1}_{-0.3}$	486 (54 × 9)	$33^{0}_{-0.2}$	$15^{0}_{-0.2}$	$39^{0}_{-0.2}$	$82^{+0.6}_{0}$	10	8
35756H□	$756^{-0.1}_{-0.3}$	702 (54 × 13)	$33^{0}_{-0.2}$	$15^{0}_{-0.2}$	$39^{0}_{-0.2}$	$82^{+0.6}_{0}$	14	11

SGLTW-40: Standard Models

◆ Moving Coils: SGLTW-40A□ □ □ B□

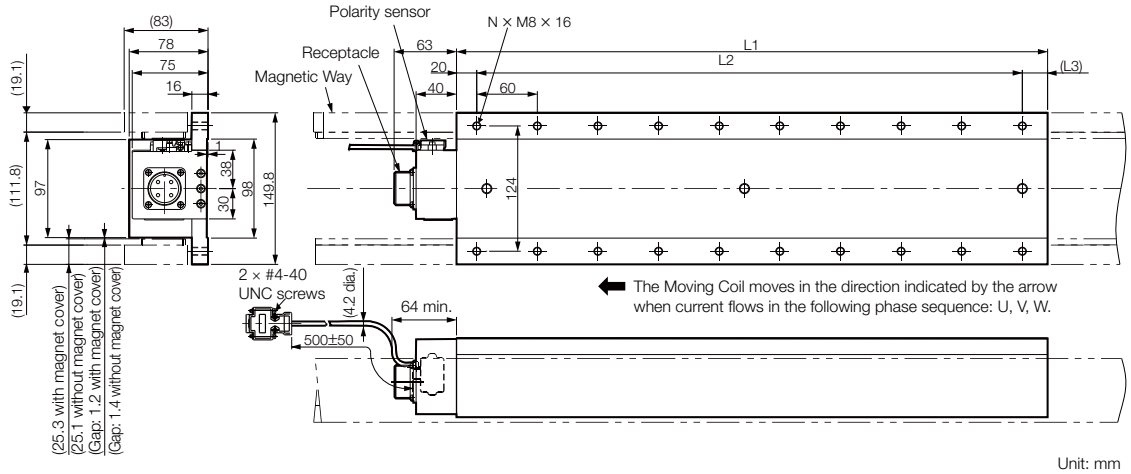

Unit: mm

Moving Coil Model SGLTW-	L1	L2	(L3)	N	Approx. Mass [kg]
40A400B□	394.2	360 (60 × 6)	(15)	14	15
40A600B□	574.2	540 (60 × 9)	(15)	20	22

Refer to the following section for the connector specifications for the Sensor Cable and Servo Motor Main Circuit Cable.

☞ SGLTW-40A□ □ □ B□ and -80A□ □ □ B□ Moving Coils (page 341)

◆ Magnetic Ways: SGLTM-40□ □ □ A□

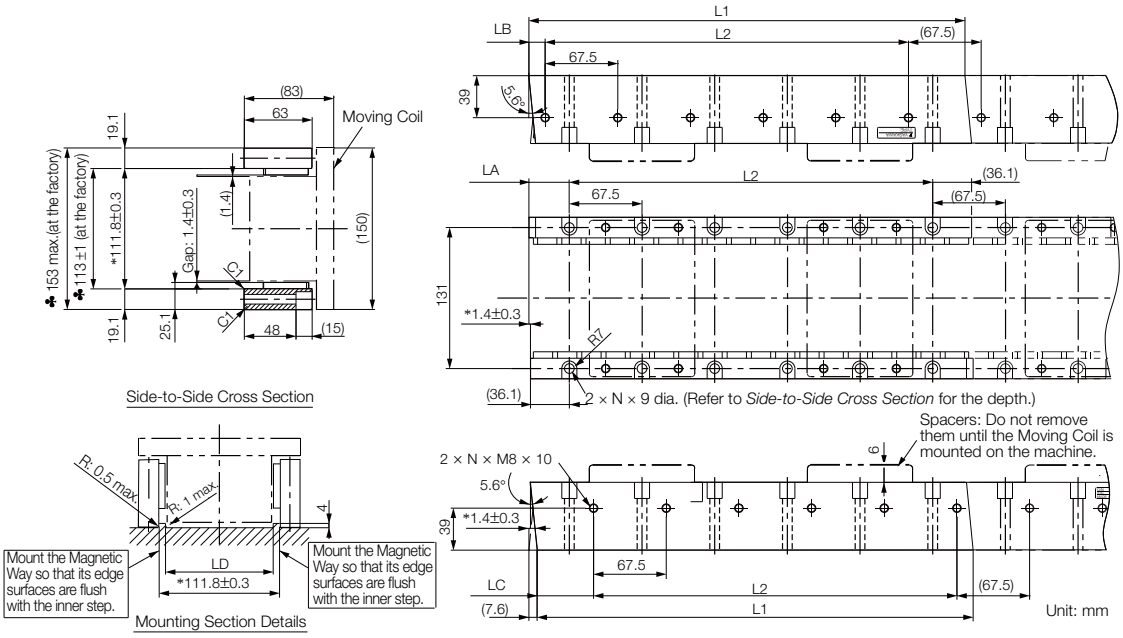

Note: 1. Two Magnetic Way tracks are used together as a set. For safety, when they are shipped, the two tracks are secured to a mounting spacer made from aluminum.

2. More than one Magnetic Way can be connected.

3. Dimensions with asterisks are the distances between the Magnetic Way tracks. Install the tracks according to the specified dimensions. Observe the dimensions given in Mounting Section Details after installation. Dimensions when the Magnetic Way is shipped from the factory are indicated by ♣.

4. Use socket head screws of strength class 10.9 or higher for the Magnetic Way mounting screws. (Do not use stainless steel screws.)

Magnetic Way Model SGLTM-	L1	L2	LA	LB	LC	LD	N	Approx. Mass [kg]
40405A□	$405^{-0.1}_{-0.3}$	337.5 (67.5 × 5)	$37.5^{0}_{-0.2}$	$15^{0}_{-0.2}$	$52.5^{0}_{-0.2}$	$100^{+0.6}_{0}$	6	9
40675A□	$675^{-0.1}_{-0.3}$	607.5 (67.5 × 9)	$37.5^{0}_{-0.2}$	$15^{0}_{-0.2}$	$52.5^{0}_{-0.2}$	$100^{+0.6}_{0}$	10	15
40945A□	$945^{-0.1}_{-0.3}$	877.5 (67.5 × 13)	$37.5^{0}_{-0.2}$	$15^{0}_{-0.2}$	$52.5^{0}_{-0.2}$	$100^{+0.6}_{0}$	14	21

◆ Magnetic Ways with Bases: SGLTM-40□ □ □ AY

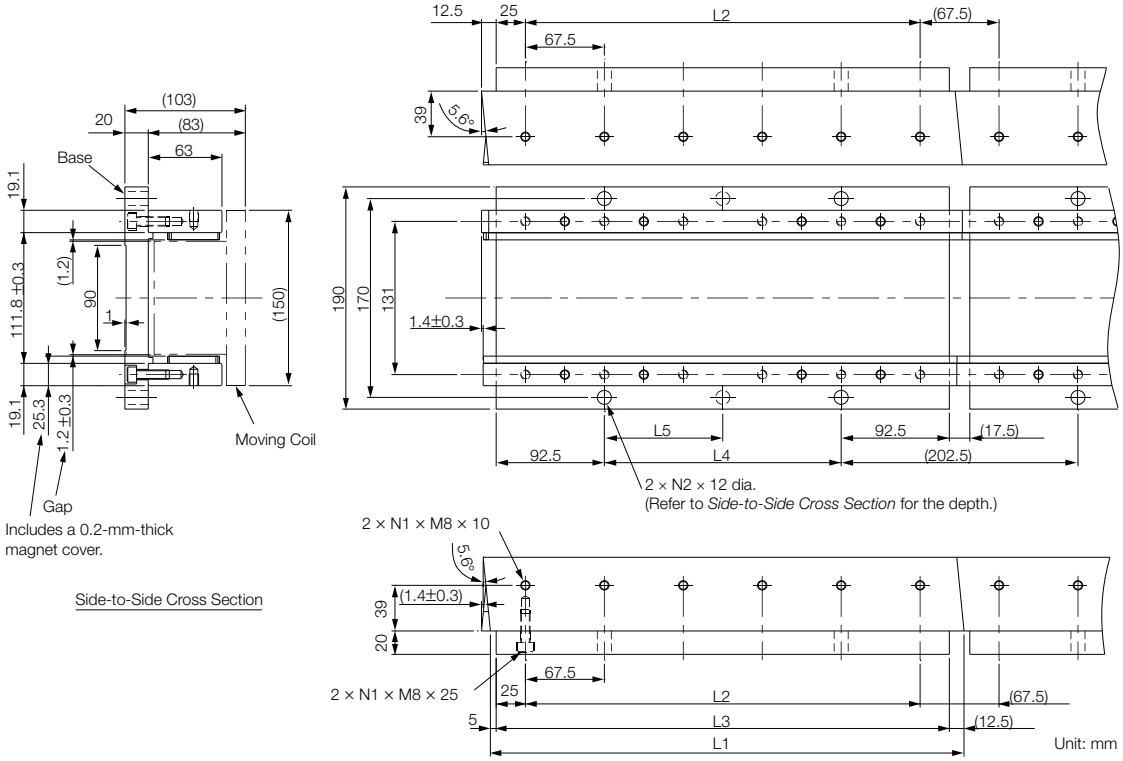

Note: Two Magnetic Way tracks are used together as a set. More than one Magnetic Way can be connected.

Magnetic Way Model SGLTM-	L1	L2	L3	L4	L5	N1	N2	Approx. Mass [kg]
40405AY	405 $^{-0.1}_{-0.3}$	337.5	387.5	202.5	202.5	6	2	13
40675AY	675 $^{-0.1}_{-0.3}$	607.5	657.5	472.5	236.25	10	3	21
40945AY	945 $^{-0.1}_{-0.3}$	877.5	927.5	742.5	247.5	14	4	30

SGLTW-50: High-Efficiency Models

◆ Moving Coils: SGLTW-50A□ □ □ H□

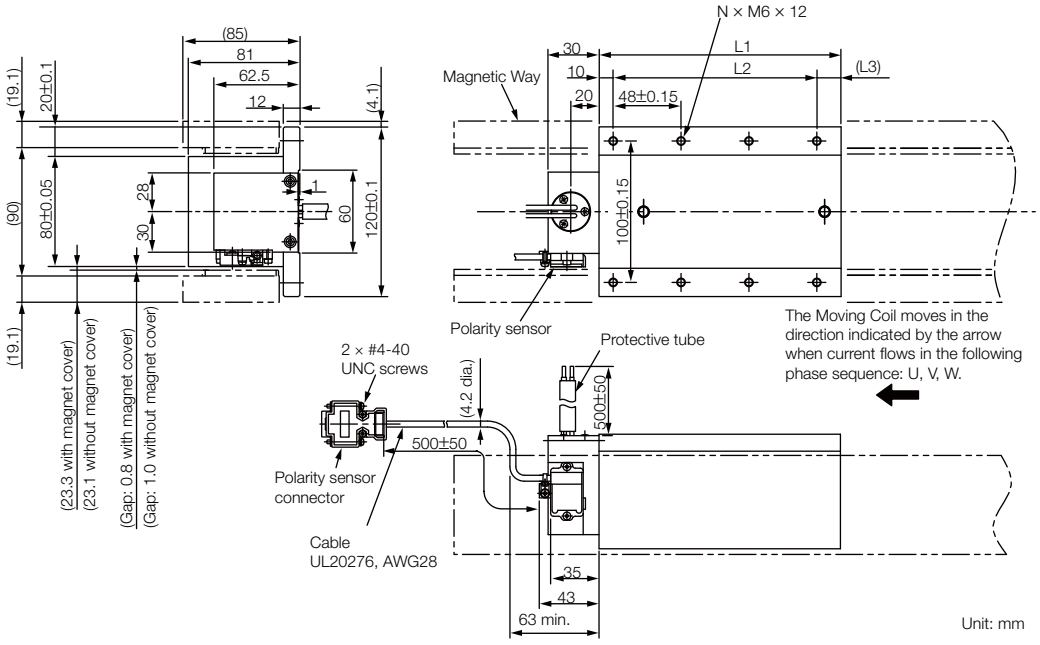

Moving Coil Model SGLTW-	L1	L2	(L3)	N	Approx. Mass [kg]
50A170H□	170	144 (48 × 3)	(16)	8	6
50A320H□	315	288 (48 × 6)	(17)	14	11

Refer to the following section for the connector specifications for the Sensor Cable and Servo Motor Main Circuit Cable.

☞ SGLTW-35A□ □ □ H□ and -50A□ □ □ H□ Moving Coils (page 342)

◆ Magnetic Ways: SGLTM-50□ □ □ H□

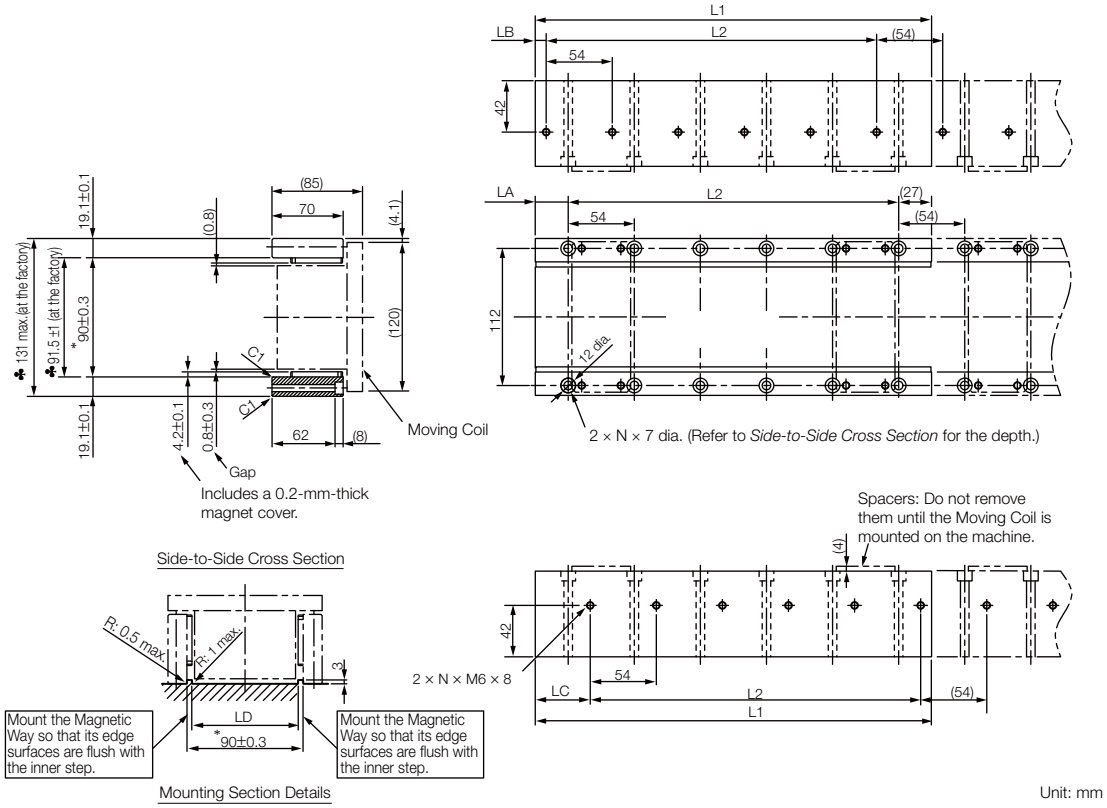

Note: 1. Two Magnetic Way tracks are used together as a set. For safety, when they are shipped, the two tracks are secured to a mounting spacer made from aluminum.

2. More than one Magnetic Way can be connected.

3. Dimensions with asterisks are the distances between the Magnetic Way tracks. Install the tracks according to the specified dimensions. Observe the dimensions given in Mounting Section Details after installation. Dimensions when the Magnetic Way is shipped from the factory are indicated by ♣.

4. Use socket head screws of strength class 10.9 or higher for the Magnetic Way mounting screws. (Do not use stainless steel screws.)

Magnetic Way Model SGLTM-	L1	L2	LA	LB	LC	LD	N	Approx. Mass [kg]
50324H□	$324^{-0.1}_{-0.3}$	270 (54 × 5)	$27^{0}_{-0.2}$	$9^{0}_{-0.2}$	$45^{0}_{-0.2}$	$82^{+0.6}_{0}$	6	8
50540H□	$540^{-0.1}_{-0.3}$	486 (54 × 9)	$27^{0}_{-0.2}$	$9^{0}_{-0.2}$	$45^{0}_{-0.2}$	$82^{+0.6}_{0}$	10	13
50756H□	$756^{-0.1}_{-0.3}$	702 (54 × 13)	$27^{0}_{-0.2}$	$9^{0}_{-0.2}$	$45^{0}_{-0.2}$	$82^{+0.6}_{0}$	14	18

SGLTW-80: Standard Models

◆ Moving Coils: SGLTW-80A□ □ □ B□

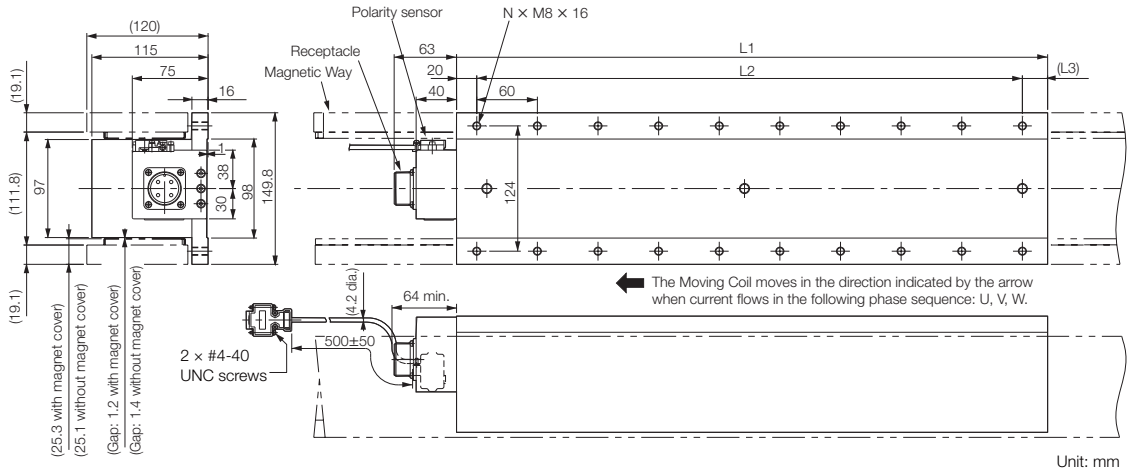

Moving Coil Model SGLTW-	L1	L2	(L3)	N	Approx. Mass [kg]
80A400B□	394.2	360 (60 × 6)	(15)	14	24
80A600B□	574.2	540 (60 × 9)	(15)	20	35

Refer to the following section for the connector specifications for the Sensor Cable and Servo Motor Main Circuit Cable.

☞ SGLTW-40A□ □ □ B□ and -80A□ □ □ B□ Moving Coils (page 341)

◆ Magnetic Ways: SGLTM-80□ □ □ A□

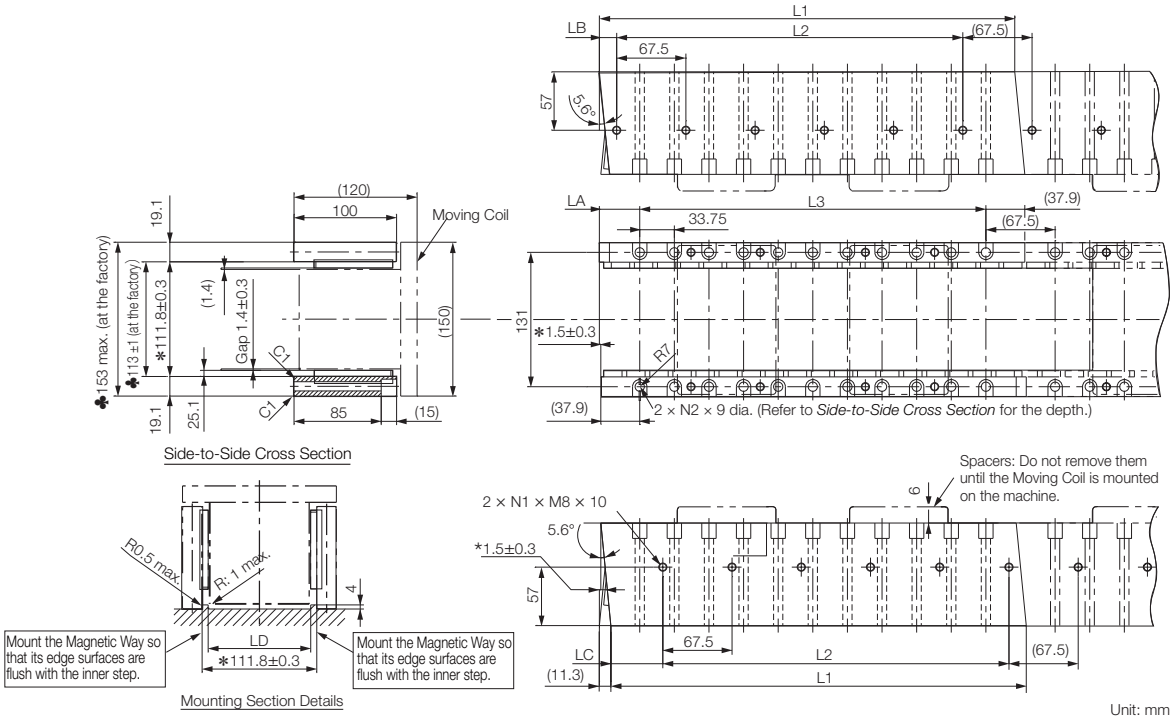

Note: 1. Two Magnetic Way tracks are used together as a set. For safety, when they are shipped, the two tracks are secured to a mounting spacer made from aluminum.

2. More than one Magnetic Way can be connected.

3. Dimensions with asterisks are the distances between the Magnetic Way tracks. Install the tracks according to the specified dimensions. Observe the dimensions given in Mounting Section Details after installation. Dimensions when the Magnetic Way is shipped from the factory are indicated by ♣.

4. Use socket head screws of strength class 10.9 or higher for the Magnetic Way mounting screws. (Do not use stainless steel screws.)

Magnetic Way Model SGLTM-	L1	L2	L3	LA	LB	LC	LD	N1	N2	Approx. Mass [kg]
80405A□	$405^{-0.1}_{-0.3}$	337.5 (67.5 × 5)	337.5 (33.75 × 10)	$39.4^{0}_{-0.2}$	$16.9^{0}_{-0.2}$	$50.6^{0}_{-0.2}$	$100^{+0.6}_{0}$	6	11	14
80675A□	$675^{-0.1}_{-0.3}$	607.5 (67.5 × 9)	607.5 (33.75 × 18)	$39.4^{0}_{-0.2}$	$16.9^{0}_{-0.2}$	$50.6^{0}_{-0.2}$	$100^{+0.6}_{0}$	10	19	24
80945A□	$945^{-0.1}_{-0.3}$	877.5 (67.5 × 13)	887.5 (33.75 × 26)	$39.4^{0}_{-0.2}$	$16.9^{0}_{-0.2}$	$50.6^{0}_{-0.2}$	$100^{+0.6}_{0}$	14	27	34

◆ Magnetic Ways with Bases: SGLTM-80□ □ □ AY

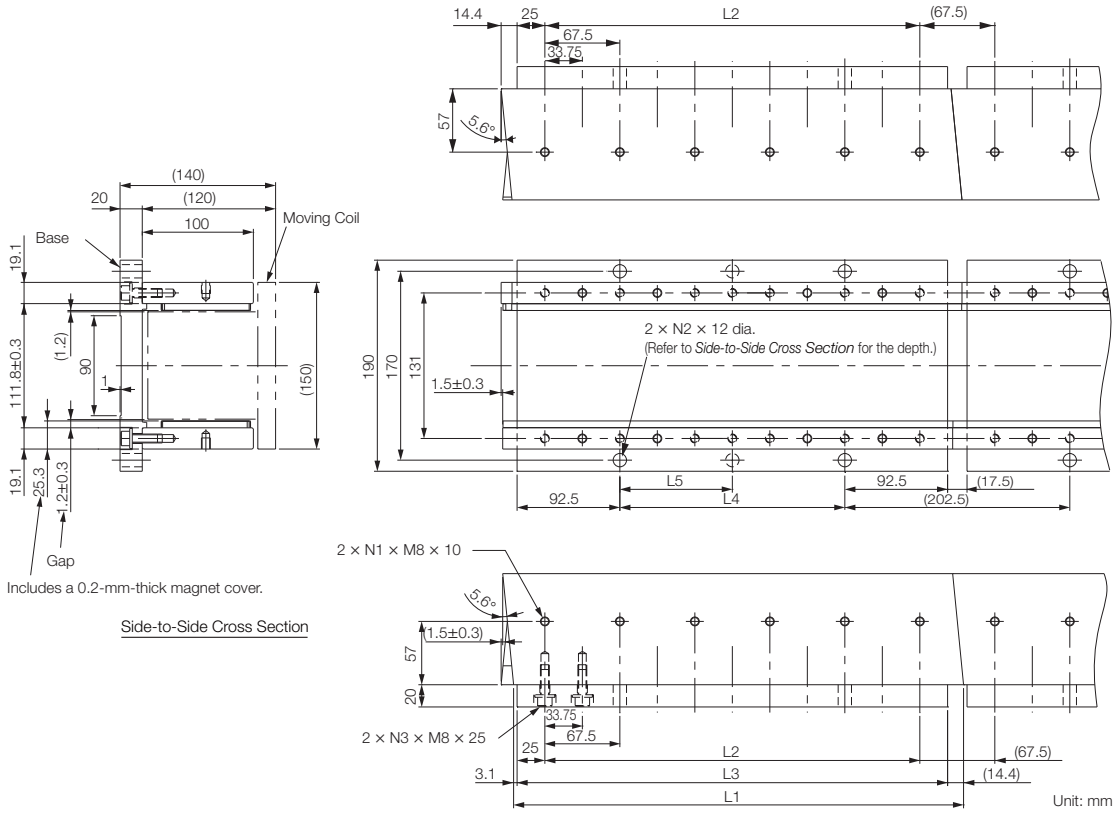

Note: Two Magnetic Way tracks are used together as a set. More than one Magnetic Way can be connected.

Magnetic Way Model SGLTM-	L1	L2	L3	L4	L5	N1	N2	N3	Approx. Mass [kg]
80405AY	405 $^{-0.1}_{-0.3}$	337.5	387.5	202.5	202.5	6	2	11	18
80675AY	675 $^{-0.1}_{-0.3}$	607.5	657.5	472.5	236.25	10	3	19	31
80945AY	945 $^{-0.1}_{-0.3}$	877.5	927.5	742.5	247.5	14	4	27	43

Connector Specifications

◆ SGLTW-20A□ □ □ A□ and -35A□ □ □ A□ Moving Coils

• Servo Motor Connector

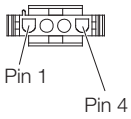

Plug: 350779-1
Pins: 350218-3 or 350547-3 (No.1 to 3)
350654-1 or 350669-1 (No. 4)
Tyco Electronics Japan G.K.

Mating Connector
Cap: 350780-1
Socket: 350537-3 or 350550-3

• Polarity Sensor Connector



Pin connector: 17JE-23090-02 (D8C) -CG
From DDK Ltd.

Mating Connector
Socket connector: 17JE-13090-02 (D8C) A-CG
Studs: 17L-002C or 17L-002C1

• Polarity Sensor Output Signal

The figure on the right shows the relationship between the Su, Sv, and Sw polarity sensor output signals and the inverse power of each motor phase Vu, Vv, and Vw when the Moving Coil moves in the direction indicated by the arrow in the dimensional drawings of the Moving Coil.

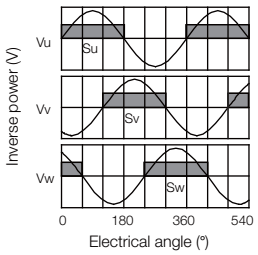

◆ SGLTW-40A□ □ □ B□ and -80A□ □ □ B□ Moving Coils

• Servo Motor Connector



Receptacle: MS3102A-22-22P
From DDK Ltd.

Mating Connector
Right-angle plug: MS3108B22-22S
Straight plug: MS3106B22-22S
Cable clamp: MS3057-12A

• Polarity Sensor Connector



Pin connector: 17JE-23090-02 (D8C) -CG
From DDK Ltd.

Mating Connector
Socket connector: 17JE-13090-02 (D8C) A-CG
Studs: 17L-002C or 17L-002C1

• Polarity Sensor Output Signal

The figure on the right shows the relationship between the Su, Sv, and Sw polarity sensor output signals and the inverse power of each motor phase Vu, Vv, and Vw when the Moving Coil moves in the direction indicated by the arrow in the dimensional drawings of the Moving Coil.

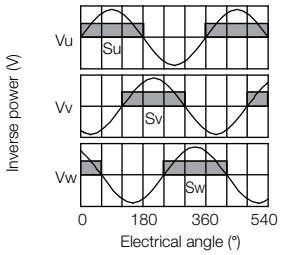

◆ SGLTW-35A□ □ □ H□ and -50A□ □ □ H□ Moving Coils

- Moving Coil Lead
  Secure the lead from the Moving Coil of the Linear Servo Motor so that it moves together with the Moving Coil.

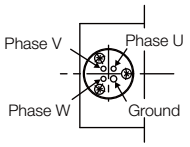

(Viewed from the top surface of the Moving Coil.)

- Polarity Sensor Connector



Pin connector: 17JE-23090-02 (D8C) -CG
From DDK Ltd.

Mating Connector
Socket connector: 17JE-13090-02 (D8C) A-CG
Studs: 17L-002C or 17L-002C1

- Polarity Sensor Output Signal

The figure on the right shows the relationship between the Su, Sv, and Sw polarity sensor output signals and the inverse power of each motor phase Vu, Vv, and Vw when the Moving Coil moves in the direction indicated by the arrow in the dimensional drawings of the Moving Coil.

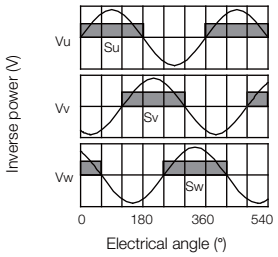

Cables for Linear Servo Motors

◆ System Configurations

Example: SGLTW Servo Motors with T-type Iron Cores

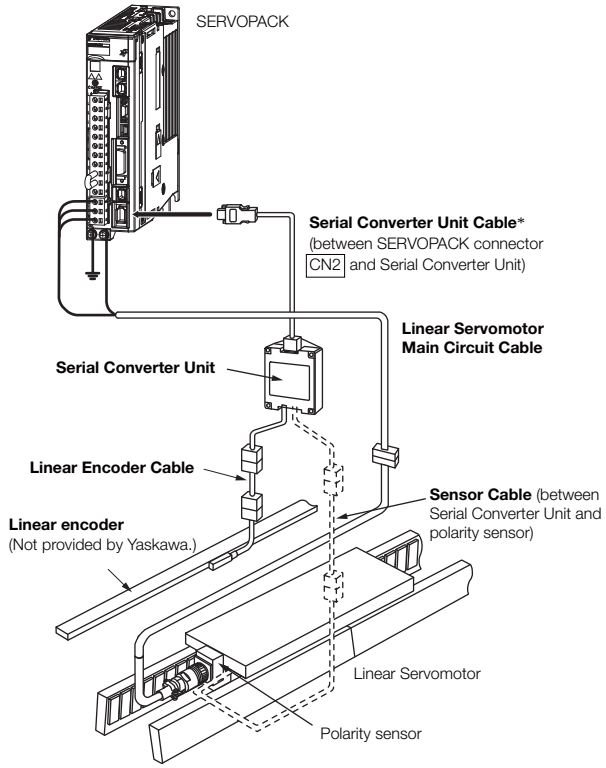

* You can connect directly to an absolute linear encoder.

Note: 1. The above system configurations are for SGLTW Servo Motors with T-type Iron Cores. Refer to the manual for the Linear Servo Motor for configurations with other models.

2. Refer to the following manual for the following information.
   - Cable dimensional drawings and cable connection specifications
   - Order numbers and specifications of individual connectors for cables
   - Order numbers and specifications for wiring materials

   📖 *Σ-7-Series AC Servo Drive Peripheral Device Selection Manual* (Manual No.: SIEP S800001 32)

Servo Motor Main Circuit Cables

Servo Motor Model	Length (L)	Order Number	Appearance
SGLTW-20A, -35A	1 m	JZSP-CLN21-01-E	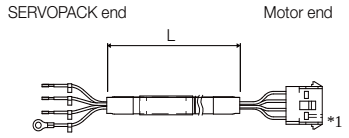
	3 m	JZSP-CLN21-03-E	
	5 m	JZSP-CLN21-05-E	
	10 m	JZSP-CLN21-10-E	
	15 m	JZSP-CLN21-15-E	
	20 m	JZSP-CLN21-20-E	
SGLTW- □□A□□□□□D	1 m	JZSP-CLN14-01-E	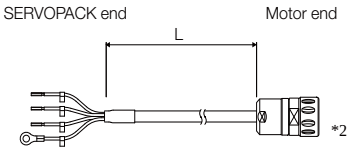
	3 m	JZSP-CLN14-03-E	
	5 m	JZSP-CLN14-05-E	
	10 m	JZSP-CLN14-10-E	
	15 m	JZSP-CLN14-15-E	
	20 m	JZSP-CLN14-20-E	
SGLTW-40□□□□□B□ -80□□□□□B□	1 m	JZSP-CLN39-01-E	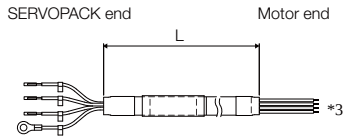
	3 m	JZSP-CLN39-03-E	
	5 m	JZSP-CLN39-05-E	
	10 m	JZSP-CLN39-10-E	
	15 m	JZSP-CLN39-15-E	
	20 m	JZSP-CLN39-20-E	

Note: Shaded model numbers are non-stock items

*1. Connector from Tyco Electronics Japan G.K.

*2. Connector from Interconnectron GmbH

*3. A connector is not provided on the Linear Servo Motor end. Obtain a connector according to your specifications. Refer to the next page for information on connectors.

JZSP-CLN39-□ □ -E Cables

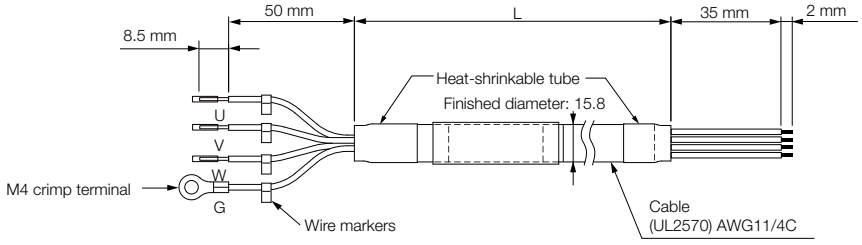

◆ Wiring Specifications

SERVOPACK Leads		Servo Motor Connector	
Wire Color	Signal	Signal	Pin
Red	Phase U	Phase U	A
White	Phase V	Phase V	B
Blue	Phase W	Phase W	C
Green/yellow	FG	FG	D

◆ JZSP-CLN39 Cable Connectors

Applicable Servo Motor	Connector Provided with Servo Motor	Plug		Cable Clamp
		Straight	Right-angle	
SGLTW-40 and -80	MS3102A22-22P	MS3106B22-22S or MS3106A22-22S	MS3108B22-22S	MS3057-12A

◆ MS3106B22-2S: Straight Plug with Two-piece Shell

Unit: mm

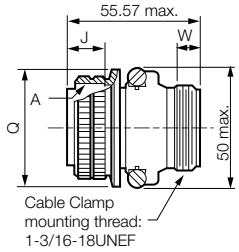

Shell Size	Joint Thread A	Length of Joint J ±0.12	Joint Nut Outer Diameter Q $^{+0}_{-0.38}$	Effective Thread Length W min.
22	1-3/8-18UNEF	18.26	40.48	9.53

◆ MS3106A22-2S: Straight Plug with Solid Shell

Unit: mm

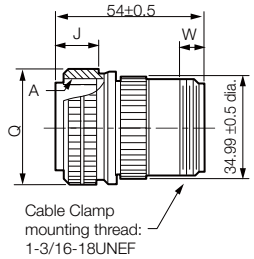

Shell Size	Joint Thread A	Length of Joint J ±0.12	Joint Nut Outer Diameter Q $^{+0}_{-0.38}$	Effective Thread Length W min.
22	1-3/8-18UNEF	18.26	40.48	9.53

◆ MS3108B22-2S: Right-angle Plug with Two-piece Shell

Unit: mm

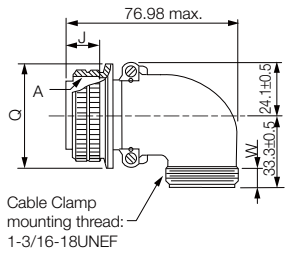

Shell Size	Joint Thread A	Length of Joint J ± 0.12	Joint Nut Outer Diameter Q $^{+0}_{-0.38}$	Effective Thread Length W min.
22	1-3/8-18UNEF	18.26	40.48	9.53

◆ Dimensional Drawings: MS3057-12A Cable Clamp with Rubber Bushing

Unit: mm

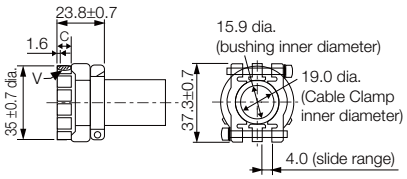

Applicable Connector Shell Size	Effective Thread Length C	Mounting Thread V	Attached Bushing
20.22	10.3	1-3/16-18UNEF	AN3420-12

Linear Encoder Cables

Name	Servo Motor Model	Length* (L)	Order Number	Appearance
For linear encoder from Renishaw PLC	All Models	1 m	JZSP-CLL00-01-E	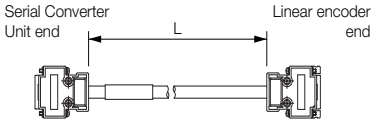
		3 m	JZSP-CLL00-03-E	
		5 m	JZSP-CLL00-05-E	
		10 m	JZSP-CLL00-10-E	
		15 m	JZSP-CLL00-15-E	
For linear encoder from Heidenhain Corporation		1 m	JZSP-CLL30-01-E	
		3 m	JZSP-CLL30-03-E	
		5 m	JZSP-CLL30-05-E	
		10 m	JZSP-CLL30-10-E	
		15 m	JZSP-CLL30-15-E	

* When using a JZDP-J00□ -□ □ □ -E Serial Converter Unit, do not exceed a cable length of 3 m.

Serial Converter Unit Cables

Servo Motor Model	Length (L)	Order Number	Appearance
All Models	1 m	JZSP-CLP70-01-E	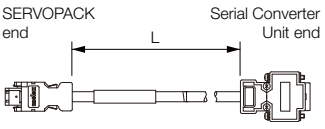
	3 m	JZSP-CLP70-03-E	
	5 m	JZSP-CLP70-05-E	
	10 m	JZSP-CLP70-10-E	
	15 m	JZSP-CLP70-15-E	
	20 m	JZSP-CLP70-20-E	

Sensor Cables

Servo Motor Model	Length (L)	Order Number	Appearance
SGLTW-□ □ A	1 m	JZSP-CLL10-01-E	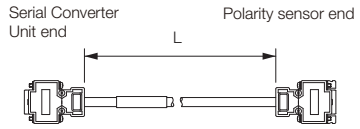
	3 m	JZSP-CLL10-03-E	
	5 m	JZSP-CLL10-05-E	
	10 m	JZSP-CLL10-10-E	
	15 m	JZSP-CLL10-15-E	

Recommended Linear Encoders and Cables

Recommended Linear Encoders

Incremental Linear Encoders

◆ 1 Vp-p Analog Voltage

You must also use a Yaskawa Serial Converter Unit. The output signal will be multiplied by 8 bits (256 divisions) or 12 bits (4,096 divisions) in the Serial Converter Unit.

Manufacturer	Linear Encoder Type	Model			Linear Encoder Pitch [μm]	Resolution [nm]	Maximum Speed*1 [m/s]	Support for Polarity Sensor Input	Application to Linear Servomotors	Application to Fully-Closed Loop Control	Reference
		Scale	Sensor Head	Relay Device between SERVOPACK and Linear Encoder*3							
Heidenhain Corporation	Exposed	LIDA48□		JZDP-H003/-H006	20	78.1	5	✓	✓	✓	page 351
				JZDP-J003/-J006		4.9	2	✓	✓	*4	page 352
		LIF48□		JZDP-H003/-H006	4	15.6	1	✓	✓	✓	page 351
				JZDP-J003/-J006		1.0	0.4	✓	*4	*4	page 352
Renishaw plc*2	Exposed	RGS20	RGH22B	JZDP-H005/-H008	20	78.1	5	✓	✓	✓	page 355
				JZDP-J005/-J008		4.9	2	✓	✓	*4	page 356

✓: Applicable

*1. The maximum speeds given in the above table are the maximum applicable speeds of the encoders when combined with a Yaskawa SERVOPACK. The actual speed will be restricted by either the maximum speed of the Linear Servomotor or the maximum speed of the Linear Encoder (given above).

*2. If you use the origin signals with a Linear Encoder from Renishaw plc, the origin may sometimes be falsely detected. If that occurs, use the BID/DIR signal to output the origin signal only in one direction.

*3. These are the models of Serial Converter Units.

*4. Contact your Yaskawa representative.

Note: Confirm detailed specifications, such as the tolerances, dimensions, and operating environment, with the manufacturer of the Linear Encoder before you use it.

◆ Encoder for Yaskawa's Serial Interface

The multiplier (number of divisions) depends on the Linear Encoder. Also, you must write the Servomotor constant file to the Linear Encoder in advance.

Manufacturer	Linear Encoder Type	Model: Scale	Model: Sensor Head	Model: Relay Device between SERVOPACK and Linear Encoder	Linear Encoder Pitch [μm]	Resolution [nm]	Maximum Speed*1 [m/s]	Support for Polarity Sensor Input	Application to Linear Servomotors	Application to Fully-Closed Loop Control	Reference
Magnescale Co., Ltd.	Exposed	SL7□0	PL101-RY*2		800	97.7	10	–	✓	✓	page 359
			PL101	MJ620-T13*3				✓	✓	*4	page 360
		SQ10	PQ10	MQ10-FLA	400	48.83	3	–	✓	✓	page 363
				MQ10-GLA				✓	✓	–	
		BL57-□□□RED*4		BD96-Y1051LC	0.4	0.78	0.8	✓	✓	–	–
				BD96-Y1025LC	0.4	1.56	1.0	✓	✓	–	–
				BD96-Y2051LC	0.4	0.78	0.8	✓	✓	–	–
				BD96-Y2025LC	0.4	1.56	1.0	✓	✓	–	–
				BD96-YJ051LC	0.4	0.78	0.8	✓	✓	–	–
				BD96-YJ025LC	0.4	1.56	1.0	✓	✓	–	–
		BF1-□□□RY□F□□*4			0.25	0.49	1.77	✓	✓	✓	–
		BF1-□□□RY□G□□*4			0.25	0.98	1.8	✓	✓	✓	–
	Sealed	SR75-□□□□□LF		–	80	9.8	3.33	–	✓	✓	page 365
		SR75-□□□□□MF		–	80	78.1	3.33	–	✓	✓	
		SR85-□□□□□LF		–	80	9.8	3.33	–	✓	✓	
		SR85-□□□□□MF		–	80	78.1	3.33	–	✓	✓	

✓: Applicable

*1. The maximum speeds given in the above table are the maximum applicable speeds of the encoders when combined with a Yaskawa SERVOPACK. The actual speed will be restricted by either the maximum speed of the Linear Servomotor or the maximum speed of the Linear Encoder (given above).

*2. This is the model of the Sensor Head with Interpolator.

*3. This is the model of the Interpolator.

*4. Contact your Yaskawa representative.

Note: Confirm detailed specifications, such as the tolerances, dimensions, and operating environment, with the manufacturer of the Linear Encoder before you use it.

Absolute Linear Encoders

◆ Encoder for Yaskawa's Serial Interface

The multiplier (number of divisions) depends on the Linear Encoder. Also, you must write the Servomotor constant file to the Linear Encoder in advance.

Manufacturer	Linear Encoder Type	Model: Scale	Model: Sensor Head	Model: Relay Device between SERVOPACK and Linear Encoder	Linear Encoder Pitch*1 [μm]	Resolution [nm]	Maximum Speed*1 [m/s]	Support for Polarity Sensor Input	Application to Linear Servomotors	Application to Fully-Closed Loop Control	Reference
Magnescale Co., Ltd.	Exposed	SQ47-□□□□S□F□□□		–	20.48	5	3.33	–	✓	✓	page 366
		SQ47-□□□□T□F□□□									
		SQ47-□□□□A□F□□□		–	40.96	10	3.33	–	✓	✓	
		SQ47-□□□□F□F□□□									
		SQ57-□□□□S□F□□□		–	20.48	5	3.33	–	✓	✓	
		SQ57-□□□□T□F□□□									
		SQ57-□□□□A□F□□□		–	40.96	10	3.33	–	✓	✓	
		SQ57-□□□□F□F□□□									
	Sealed	SR77-□□□□□LF		–	80	9.8	3.33	–	✓	✓	page 365
		SR77-□□□□□MF		–	80	78.1	3.33	–	✓	✓	
		SR87-□□□□□LF		–	80	9.8	3.33	–	✓	✓	
		SR87-□□□□□MF		–	80	78.1	3.33	–	✓	✓	
Mitutoyo Corporation	Exposed	ST781A		–	256	500	5	–	✓	✓	page 367
		ST782A		–	256	500	5	–	✓	✓	
		ST783A		–	51.2	100	5	–	✓	✓	
		ST784A		–	51.2	100	5	–	✓	✓	
		ST788A		–	51.2	100	5	–	✓	✓	
		ST789A*3		–	25.6	50	5	–	✓	✓	
		ST1381		–	5.12	10	8	–	✓	✓	
		ST1382		–	0.512	1	3.6*4	–	✓	✓	
Heidenhain Corporation	Exposed	LIC4100 Series		EIB3391Y*5	20.48	5	10	–	✓	✓	page 354
		LIC2100 Series			204.8	50	10	–	✓	✓	
					409.6	100	10	–	✓	✓	
	Sealed	LC115			40.96	10	3	–	✓	✓	
		LC415			40.96	10	3	–	✓	✓	
Renishaw plc	Exposed	EL36Y-□□050F□□□		–	12.8	50	100	–	✓	✓	page 358
		EL36Y-□□100F□□□		–	25.6	100	100	–	✓	✓	
		EL36Y-□□500F□□□		–	128	500	100	–	✓	✓	
		RL36Y-□□050□□□		–	12.8	50	100	–	✓	✓	
		RL36Y-□□001□□□		–	0.256	1	3.6	–	✓	✓	

✓: Applicable

*1. These are reference values for setting SERVOPACK parameters. Contact the manufacturer for actual linear encoder scale pitches.
*2. The maximum speeds given in the above table are the maximum applicable speeds of the encoders when combined with a Yaskawa SERVOPACK.
The actual speed will be restricted by either the maximum speed of the Linear Servomotor or the maximum speed of the Linear Encoder (given above).
*3. Contact Mitutoyo Corporation for details on the Linear Encoders.
*4. The speed is restricted for some SERVOPACKs.
*5. This is the model of the Interpolator.

Note: Confirm detailed specifications, such as the tolerances, dimensions, and operating environment, with the manufacturer of the Linear Encoder before you use it.

Connections to Linear Encoder from Heidenhain Corporation

◆ Connections for a 1 Vp-p Analog Voltage Output Signal

You must make the connections through a Yaskawa Serial Converter Unit. The output signal will be multiplied by 8 bits (256 divisions) or 12 bits (4,096 divisions) in the Serial Converter Unit.

■ Connecting to a Linear Servomotor with a Polarity Sensor

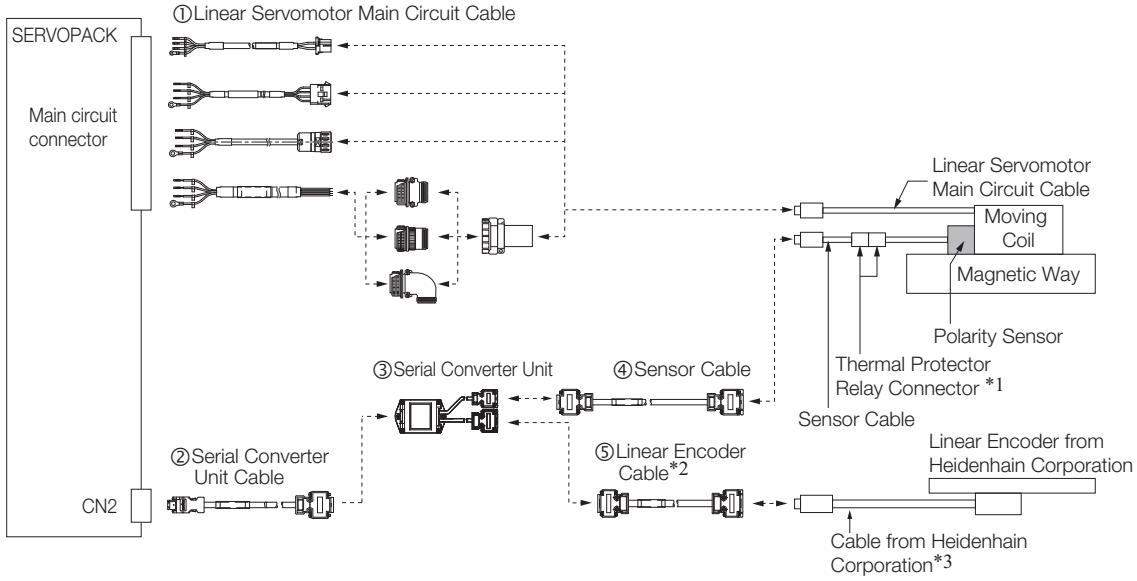

*1. Only SGLFW2 Servomotors come equipped with Thermal Protector Relay Connectors.
*2. When using a JZDP-J00□-□□□ Serial Converter Unit, do not use a Yaskawa Linear Encoder Cable that is longer than 3 m.
*3. Contact Heidenhain Corporation for details on cables (analog 1 Vp-p output, D-sub 15-pin, male) from Heidenhain Corporation.

■ Connecting to a Linear Servomotor without a Polarity Sensor

Servomotors Other Than the SGLFW2

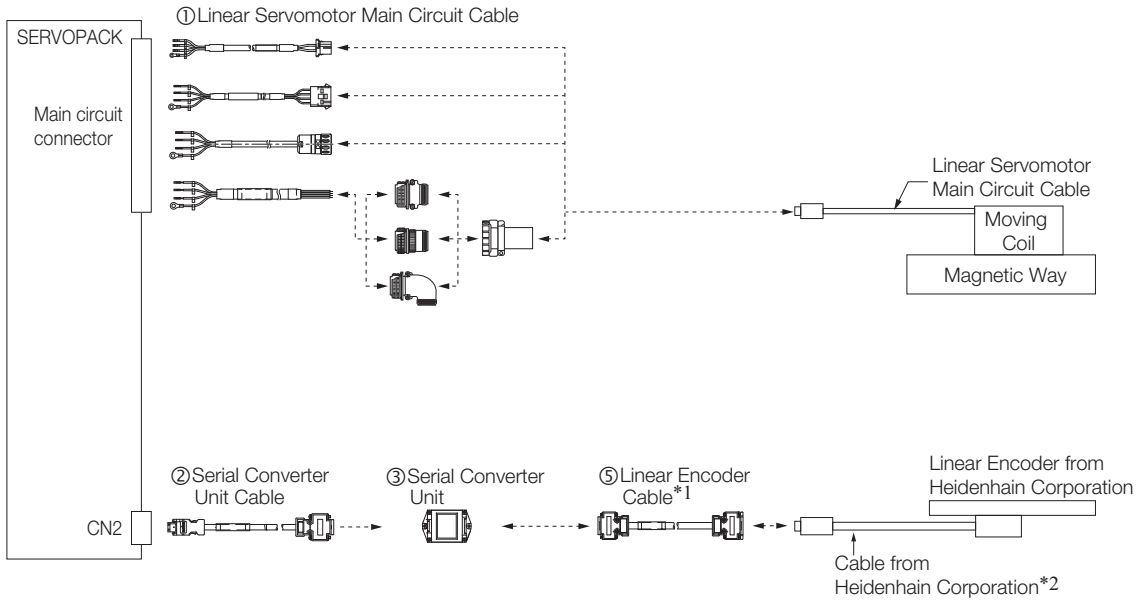

*1. When using a JZDP-J00□-□□□ Serial Converter Unit, do not use a Yaskawa Linear Encoder Cable that is longer than 3 m.

*2. Contact Heidenhain Corporation for details on cables (analog 1 Vp-p output, D-sub 15-pin, male) from Heidenhain Corporation.

SGLFW2 Servomotors

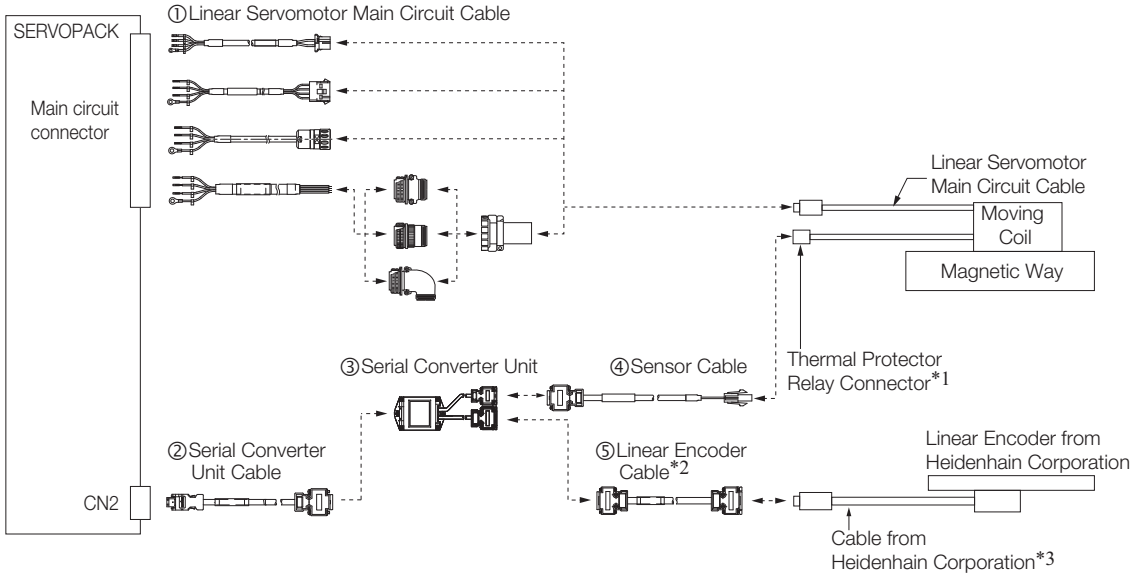

*1. Only SGLFW2 Servomotors come equipped with Thermal Protector Relay Connectors.
*2. When using a JZDP-J00□-□□□ Serial Converter Unit, do not use a Yaskawa Linear Encoder Cable that is longer than 3 m.
*3. Contact Heidenhain Corporation for details on cables (analog 1 Vp-p output, D-sub 15-pin, male) from Heidenhain Corporation.

No.	Cable Type	Reference		
		SGLG	SGLF	SGLT
①	Linear Servomotor Main Circuit Cable	page 255	page 280	page 303
②	Serial Converter Unit Cable	page 369		
③	Serial Converter Unit	page 368		
④	Sensor Cable	page 369		
⑤	Linear Encoder Cable	page 370		

◆ LIC4100, LIC2100, LC115, or LC415 Linear Encoder with EIB3391Y Interpolator

Important

1. You cannot use an LIC4100, LIC2100, LC115, or LC415 Linear Encoder together with a Linear Servomotor with a Polarity Sensor.
2. If you use an SGLFW2 Servomotor, input the thermal protector signal from the Linear Servomotor to the host controller. The thermal protector signal is closed when the temperature is normal and open when the thermal protector is activated. Do not exceed 3 A or 30 V.

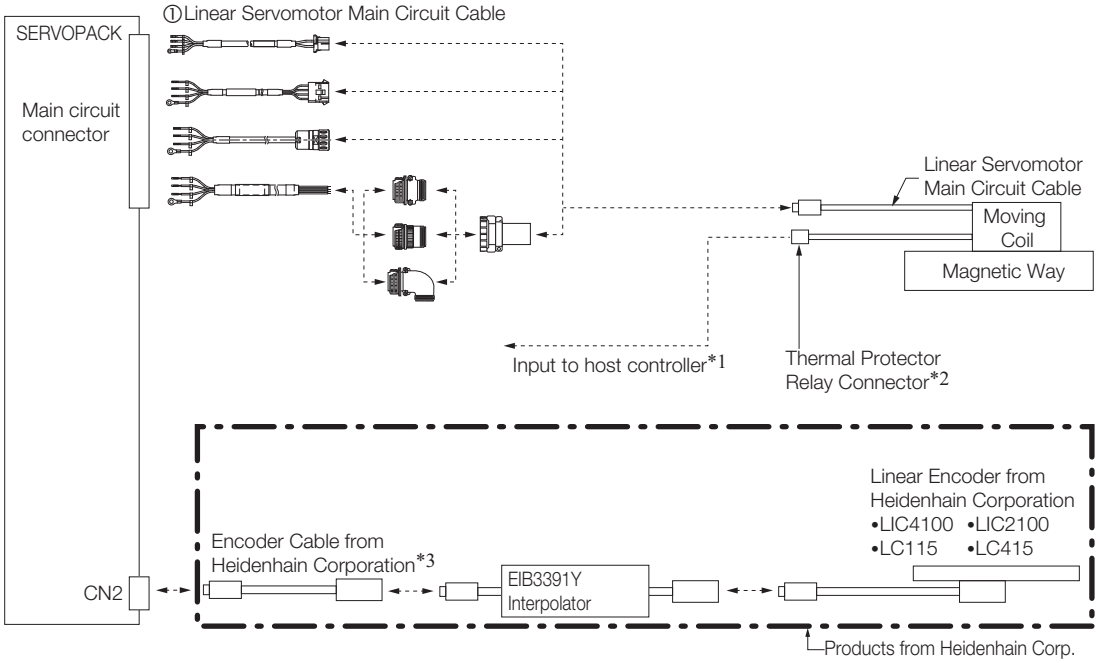

*1. Cables to connect to the host controller are not provided by Yaskawa.
Refer to the following manual for information on connector models.
Σ-7-Series AC Servo Drive Peripheral Device Selection Manual (Manual No.: SIEP S800001 32)

*2. Only SGLFW2 Servomotors come equipped with Thermal Protector Relay Connectors.

*3. Use an Encoder Cable from Heidenhain Corporation. Contact Heidenhain Corporation for detailed Encoder Cable specifications.

No.	Cable Type	Reference		
		SGLG	SGLF	SGLT
①	Linear Servomotor Main Circuit Cable	page 255	page 280	page 303

Connections to Linear Encoder from Renishaw plc

◆ Connections for a 1 Vp-p Analog Voltage Output Signal

You must make the connections through a Yaskawa Serial Converter Unit. The output signal will be multiplied by 8 bits (256 divisions) or 12 bits (4,096 divisions) in the Serial Converter Unit.

■ Connecting to a Linear Servomotor with a Polarity Sensor

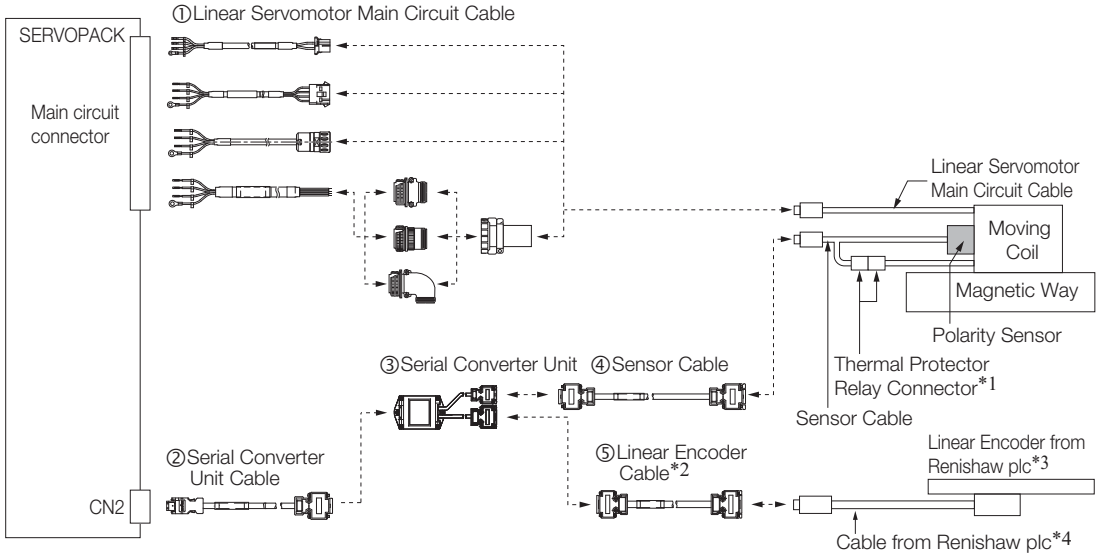

*1. Only SGLFW2 Servomotors come equipped with Thermal Protector Relay Connectors.
*2. When using a JZDP-J00□-□□□ Serial Converter Unit, do not use a Yaskawa Linear Encoder Cable that is longer than 3 m.
*3. If you use the origin signals with a Linear Encoder from Renishaw plc, the origin may sometimes be falsely detected. If that occurs, use the BID/DIR signal to output the origin signal only in one direction.
*4. Contact Renishaw plc for details on cables (analog 1 Vp-p output, D-sub 15-pin, male) from Renishaw plc. However, the BID and DIR signals are not connected.

■ Connecting to a Linear Servomotor without a Polarity Sensor

Servomotors Other Than the SGLFW2

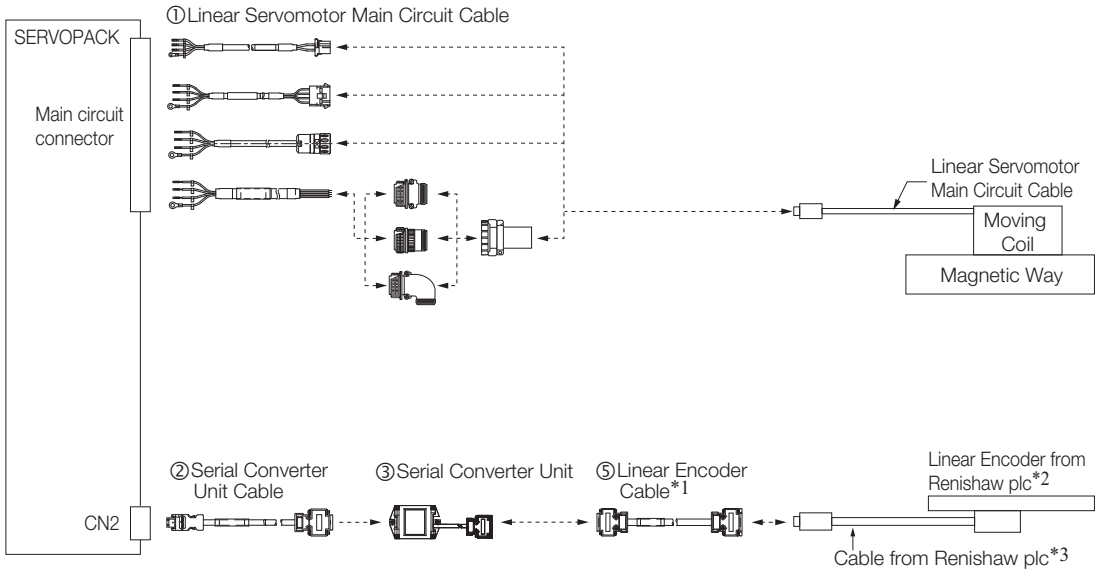

*1. When using a JZDP-J00□-□□□ Serial Converter Unit, do not use a Yaskawa Linear Encoder Cable that is longer than 3 m.

*2. If you use the origin signals with a Linear Encoder from Renishaw plc, the origin may sometimes be falsely detected. If that occurs, use the BID/DIR signal to output the origin signal only in one direction.

*3. Contact Renishaw plc for details on cables (analog 1 Vp-p output, D-sub 15-pin, male) from Renishaw plc. However, the BID and DIR signals are not connected.

SGLFW2 Servomotors

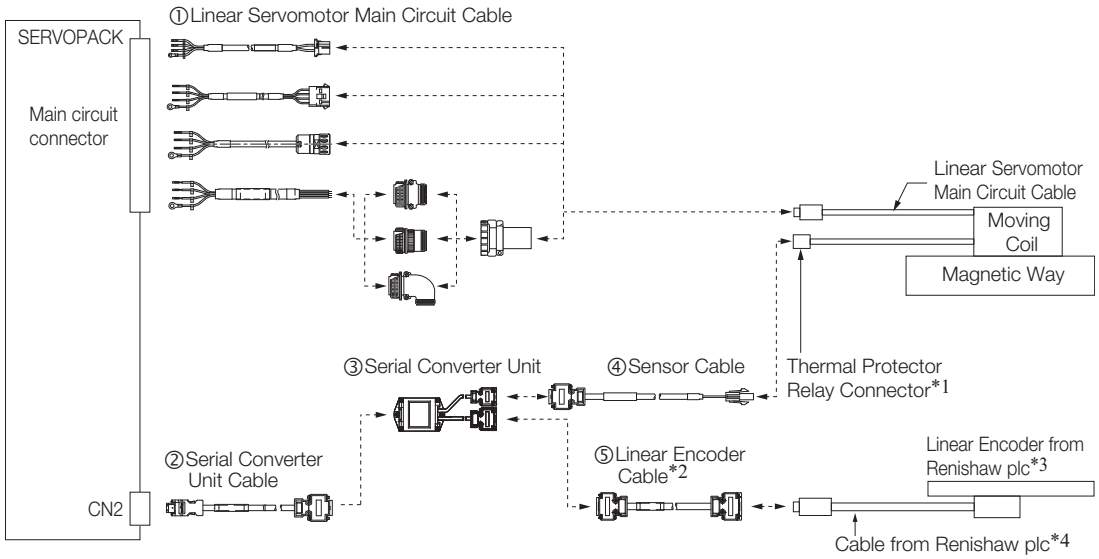

*1. Only SGLFW2 Servomotors come equipped with Thermal Protector Relay Connectors.
*2. When using a JZDP-J00□-□□□ Serial Converter Unit, do not use a Yaskawa Linear Encoder Cable that is longer than 3 m.
*3. If you use the origin signals with a Linear Encoder from Renishaw plc, the origin may sometimes be falsely detected. If that occurs, use the BID/DIR signal to output the origin signal only in one direction.
*4. Contact Renishaw plc for details on cables (analog 1 Vp-p output, D-sub 15-pin, male) from Renishaw plc. However, the BID and DIR signals are not connected.

No.	Cable Type	Reference		
		SGLG	SGLF	SGLT
①	Linear Servomotor Main Circuit Cable	page 255	page 280	page 303
②	Serial Converter Unit Cable	page 369		
③	Serial Converter Unit	page 368		
④	Sensor Cable	page 369		
⑤	Linear Encoder Cable	page 370		

◆ EVOLUTE Series Linear Encoder (model: EL36Y-□□□□□□□□), RESOLUTE Series Linear Encoder (model: RL36Y-□□□□□□□)

Important

1. You cannot use an EVOLUTE Series or RESOLUTE Series Linear Encoder together with a Linear Servomotor with a Polarity Sensor.
2. If you use an SGLFW2 Servomotor, input the thermal protector signal from the Linear Servomotor to the host controller. The thermal protector signal is closed when the temperature is normal and open when the thermal protector is activated. Do not exceed 3 A or 30 V.

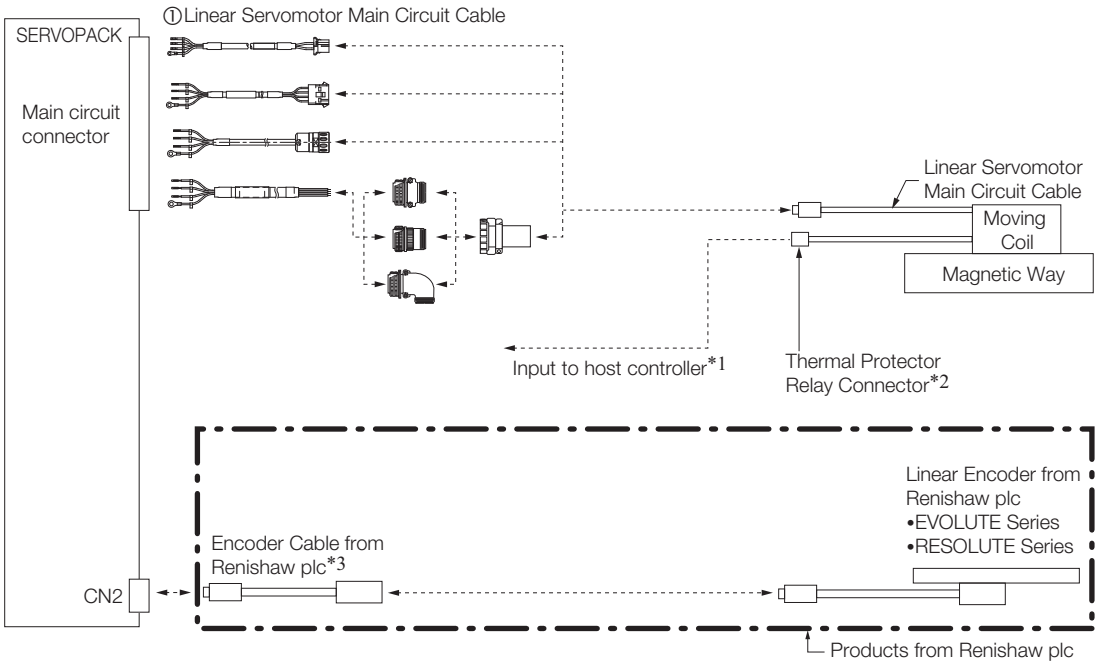

*1. Cables to connect to the host controller are not provided by Yaskawa.
Refer to the following manual for information on connector models.
📖 **Σ-7-Series AC Servo Drive Peripheral Device Selection Manual (Manual No.: SIEP S800001 32)**

*2. Only SGLFW2 Servomotors come equipped with Thermal Protector Relay Connectors.

*3. Use an Encoder Cable from Renishaw plc. Contact Renishaw plc for detailed Encoder Cable specifications.

No.	Cable Type	Reference		
		SGLG	SGLF	SGLT
①	Linear Servomotor Main Circuit Cable	page 255	page 280	page 303

Connections to Linear Encoder from Magnescale Co., Ltd.

◆ SL7□0 Linear Encoder and PL101-RY Sensor Head with Interpolator

Important

1. You cannot use a PL101-RY Sensor Head with an Interpolator together with a Linear Servomotor with a Polarity Sensor.
2. If you use an SGLFW2 Servomotor, input the thermal protector signal from the Linear Servomotor to the host controller. The thermal protector signal is closed when the temperature is normal and open when the thermal protector is activated. Do not exceed 3 A or 30 V.

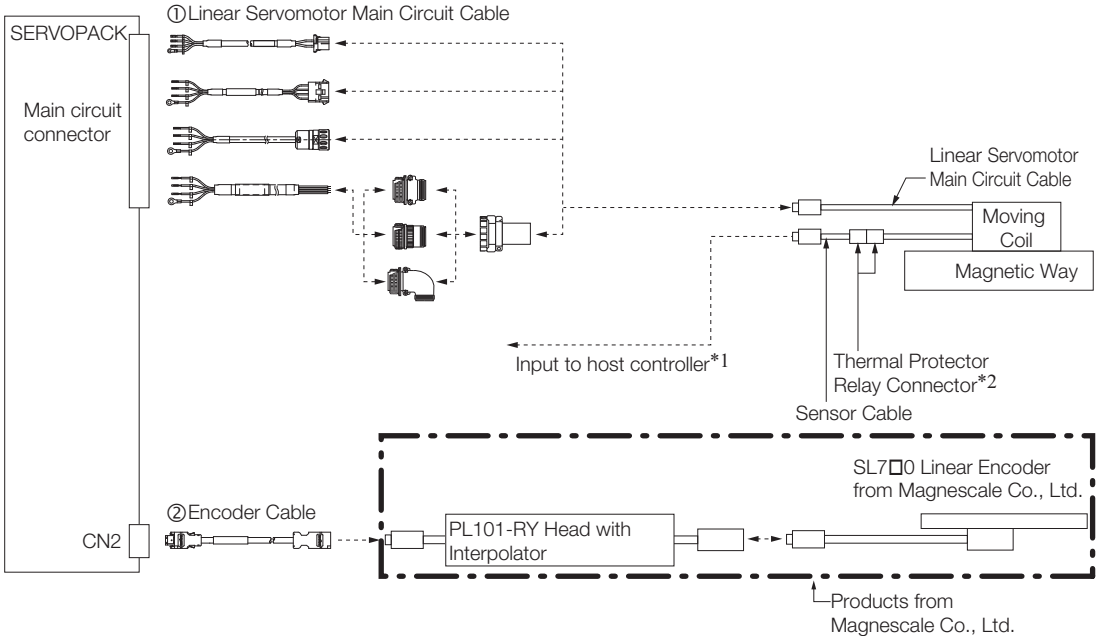

*1. Cables to connect to the host controller are not provided by Yaskawa.
Refer to the following manual for information on connector models.
📖 **Σ-7-Series AC Servo Drive Peripheral Device Selection Manual (Manual No.: SIEP S800001 32)**

*2. Only SGLFW2 Servomotors come equipped with Thermal Protector Relay Connectors.

No.	Cable Type	Reference		
		SGLG	SGLF	SGLT
①	Linear Servomotor Main Circuit Cable	page 255	page 280	page 303
②	Encoder Cable	Refer to the below.		

■ Encoder Cable

Name	Length (L)	Order Number		Appearance
		Standard Cable	Flexible Cable*	
Cable with Connectors on Both Ends	3 m	JZSP-CMP00-03-E	JZSP-CMP10-03-E	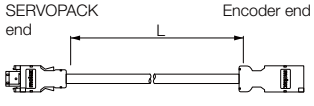
	5 m	JZSP-CMP00-05-E	JZSP-CMP10-05-E	
	10 m	JZSP-CMP00-10-E	JZSP-CMP10-10-E	
	15 m	JZSP-CMP00-15-E	JZSP-CMP10-15-E	
	20 m	JZSP-CMP00-20-E	JZSP-CMP10-20-E	

* Use Flexible Cables for moving parts of machines, such as robots.
The recommended bending radius (R) is 68 mm or larger.

◆ SL7□0 Linear Encoder, PL101 Sensor Head, and MJ620-T13 Interpolator

Important

1. A 5-VDC power supply is required for the MJ620-T13. (The 5-VDC power supply is not provided by Yaskawa.)
2. Refer to the MJ620-T13 specifications from Magnescale Co., Ltd. for the current consumption of the MJ620-T13.
3. If you use an SGLFW2 Servomotor, remove the thermal protector relay connector and input the thermal protector signal from the Linear Servomotor to the host controller. The thermal protector signal is closed when the temperature is normal and open when the thermal protector is activated. Do not exceed 3 A or 30 V.

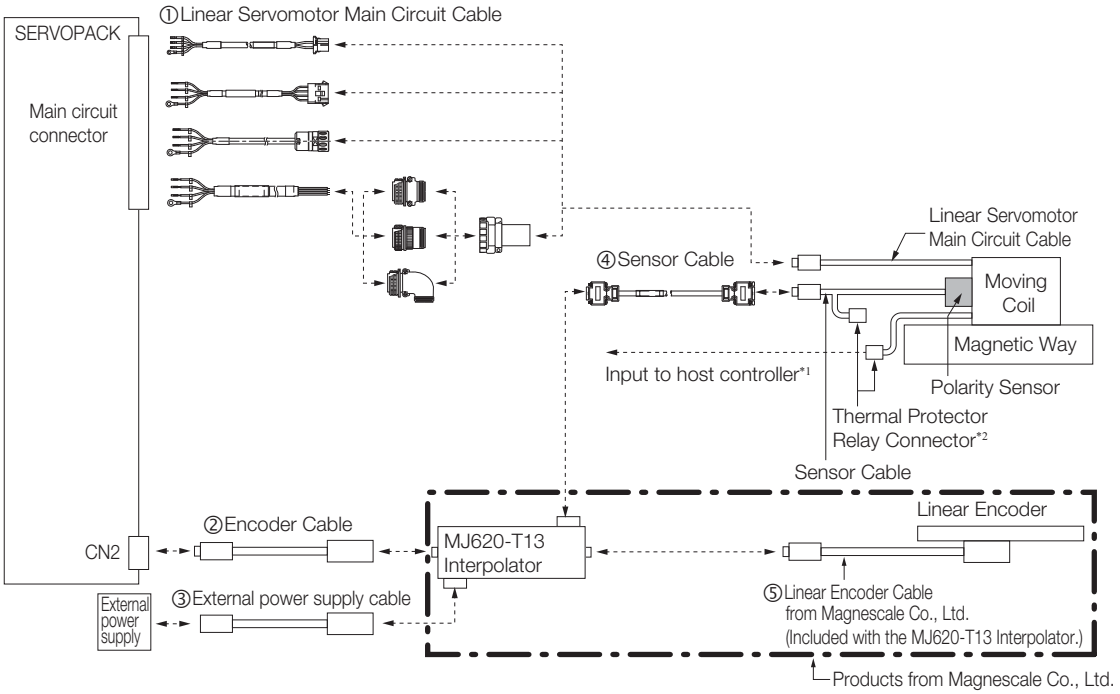

*1. Cables to connect to the host controller are not provided by Yaskawa.
Refer to the following manual for information on connector models.
📖 **Σ-7-Series AC Servo Drive Peripheral Device Selection Manual (Manual No.: SIEP S800001 32)**

*2. Only SGLFW2 Servomotors come equipped with Thermal Protector Relay Connectors.

No.	Cable Type		Reference		
			SGLG	SGLF	SGLT
①	Linear Servomotor Main Circuit Cable		page 255	page 280	page 303
②	Encoder Cable	These cables are not provided by Yaskawa.	page 361		
③	External power supply cable		page 362		
④	Sensor Cable		page 369		
⑤	Linear Encoder Cable	Use the cables that come with the MJ620-T13 Interpolator. For details, refer to the specifications for the MJ620-T13 Interpolator.	–		

■ Encoder Cables

These cables are not provided by Yaskawa. Use a shielded cable. Refer to the following tables for the pin layouts.

SERVOPACK End of Cable (CN2)

- Plug Connector: 55100-0670 (Molex Japan LLC)
- Connector order number: JZSP-CMP9-1-E (SERVOPACK Connector Kit)

Pin	Signal	Function
1	PG5 V	Encoder power supply +5 V
2	PG0 V	Encoder power supply 0 V
3	–	–
4	–	–
5	PS	Serial data
6	/PS	
Shell	Shield	–

MJ620-T13 End of Cable

For details, refer to the specifications for the MJ620-T13 from Magnescale Co., Ltd..

- Receptacle: PCR-E20LMD+ (Honda Tsushin Kogyo Co., Ltd.)
- Plug: PCR-E20FS+ (Honda Tsushin Kogyo Co., Ltd.)
- Shell: PCS-E20L□ (Honda Tsushin Kogyo Co., Ltd.)

Pin	Signal	Function	Pin	Signal	Function
1	Do not connect.	–	12	0 V	0 V
2	Do not connect.	–	13	Do not connect.	–
3	Do not connect.	–	14	0 V	0 V
4	Do not connect.	–	15	Do not connect.	–
5	SD	Serial data	16	0 V	0 V
6	/SD		17	Do not connect.	–
7	Do not connect.	–	18	Do not connect.	–
8	Do not connect.	–	19	Do not connect.	–
9	Do not connect.	–	20	Do not connect.	–
10	Do not connect.	–	Shell	Shield	–
11	Do not connect.	–			

Cables without Connectors

Name	Length (L)	Order Number	
		Standard Cable	Flexible Cable
Cables without Connectors	5 m	JZSP-CMP09-05-E	JZSP-CSP39-05-E
	10 m	JZSP-CMP09-10-E	JZSP-CSP39-10-E
	15 m	JZSP-CMP09-15-E	JZSP-CSP39-15-E
	20 m	JZSP-CMP09-20-E	JZSP-CSP39-20-E

Note: We recommend that you use Flexible Cables.

■ External Power Supply Cables

This cable is not provided by Yaskawa. Refer to the table on the right for the pin layout.

For details, refer to the specifications for the MJ620-T13 from Magnescale Co., Ltd..

- Connector Header: MC1.5/2-GF-3.81 (Phoenix Contact)
- Connector Plug: MC1.5/2-STF-3.81 (Phoenix Contact)

Pin	Signal	Function
1	+5 V	+5 V
2	0 V	0 V

◆ SmartSCALE Linear Encoder (SQ10 Scale + MQ10-□LA Interpolator)

> **Important** If you use an SGLFW2 Servomotor, remove the thermal protector relay connector and input the thermal protector signal from the Linear Servomotor to the host controller. The thermal protector signal is closed when the temperature is normal and open when the thermal protector is activated. Do not exceed 3 A or 30 V.

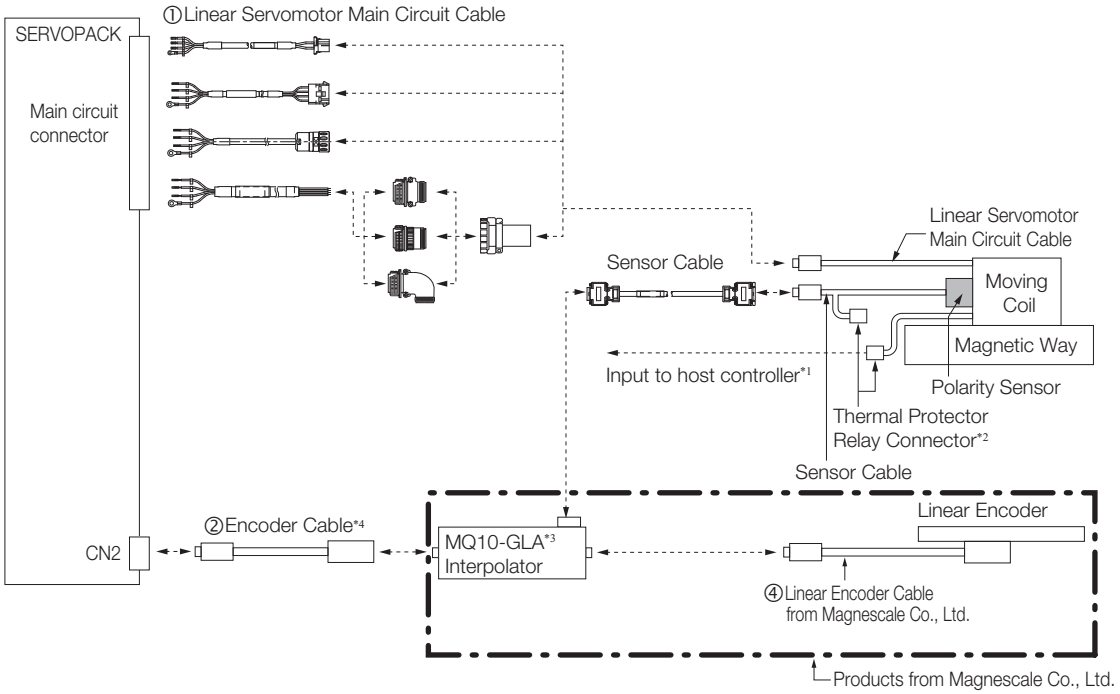

*1. Cables to connect to the host controller are not provided by Yaskawa.
Refer to the following manual for information on connector models.
📖 **Σ-7-Series AC Servo Drive Peripheral Device Selection Manual (Manual No.: SIEP S800001 32)**

*2. Only SGLFW2 Servomotors come equipped with Thermal Protector Relay Connectors.

*3. This cable configurations shown above is the connection when you use the MQ10-GLA interpolator with polarity sensor.

*4. The maximum length of the Serial Converter Unit Cable is 15 m.

No.	Cable Type		Reference		
			SGLG	SGLF	SGLT
①	Linear Servomotor Main Circuit Cable		page 255	page 280	page 303
②	Encoder Cable		page 364		
③	Sensor Cable		page 369		
④	Linear Encoder Cable	Use the cables that come with the MQ10-□LA Interpolator. For details, refer to the specifications for the MQ10-□LA Interpolator.	–		

■ Encoder Cables

These cables are not provided by Yaskawa. Use a shielded cable. Refer to the following tables for the pin layouts.

SERVOPACK End of Cable (CN2)

- Plug Connector: 55100-0670 (Molex Japan LLC)
- Connector order number: JZSP-CMP9-1-E (SERVOPACK Connector Kit)

Pin	Signal	Function
1	PG5 V	Encoder power supply +5 V
2	PG0 V	Encoder power supply 0 V
3	–	–
4	–	–
5	PS	Serial data
6	/PS	
Shell	Shield	–

MQ10-□LA End of Cable

For details, refer to the specifications for the MQ10-□LA from Magnescale Co., Ltd..

Cables without Connectors

Name	Length (L)	Order Number	
		Standard Cable	Flexible Cable
Cables without Connectors	5 m	JZSP-CMP09-05-E	JZSP-CSP39-05-E
	10 m	JZSP-CMP09-10-E	JZSP-CSP39-10-E
	15 m	JZSP-CMP09-15-E	JZSP-CSP39-15-E

Note: We recommend that you use Flexible Cables.

◆ SR-75, SR-77, SR-85, and SR-87 Linear Encoders

Important

1. You cannot use an SR-75, SR-77, SR-85, or SR-87 Linear Encoder with a Linear Servomotor with a Polarity Sensor.
2. If you use an SGLFW2 Servomotor, input the thermal protector signal from the Linear Servomotor to the host controller. The thermal protector signal is closed when the temperature is normal and open when the thermal protector is activated. Do not exceed 3 A or 30 V.

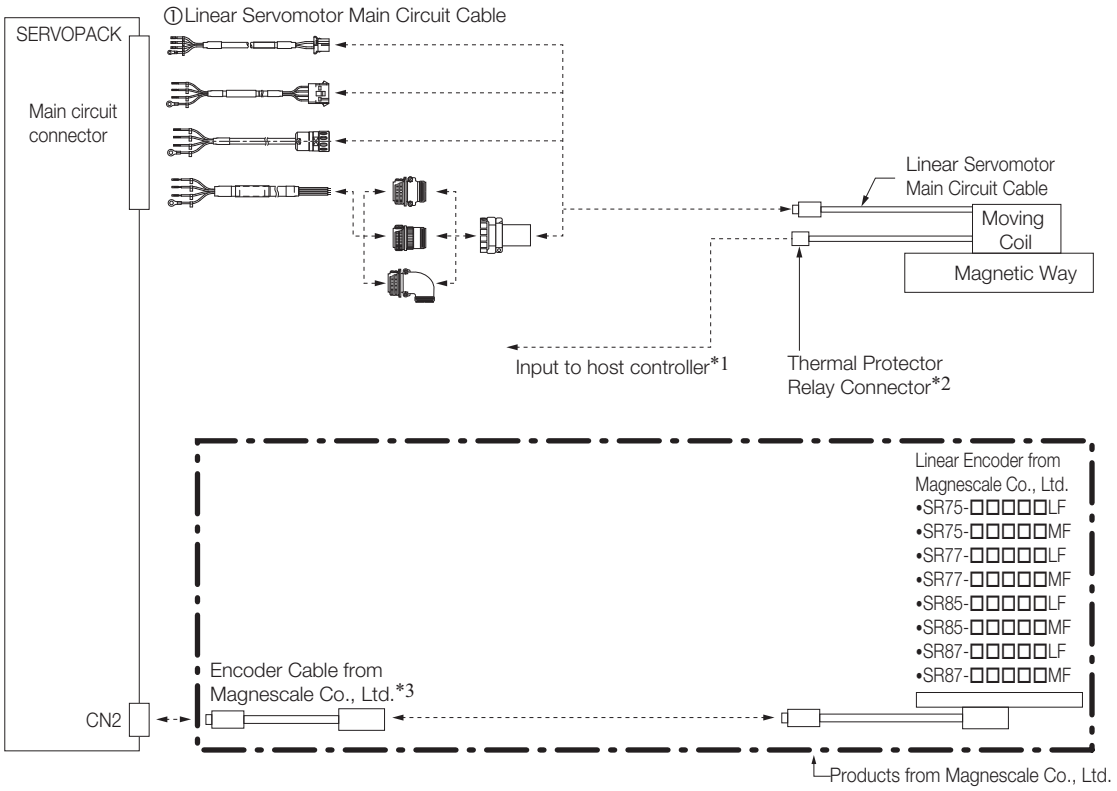

*1. Cables to connect to the host controller are not provided by Yaskawa.
Refer to the following manual for information on connector models.
📖 **Σ-7-Series AC Servo Drive Peripheral Device Selection Manual (Manual No.: SIEP S800001 32)**

*2. Only SGLFW2 Servomotors come equipped with Thermal Protector Relay Connectors.

*3. Use an Encoder Cable from Magnescale Co., Ltd. Contact Magnescale Co., Ltd. for detailed Encoder Cable specifications.

No.	Cable Type	Reference		
		SGLG	SGLF	SGLT
①	Linear Servomotor Main Circuit Cable	page 255	page 280	page 303

◆ SmartSCALE (SQ47/SQ57) Linear Encoders

Important

1. You cannot use an SQ47 or SQ57 Linear Encoder with a Linear Servomotor with a Polarity Sensor.
2. If you use an SGLFW2 Servomotor, input the thermal protector signal from the Linear Servomotor to the host controller. The thermal protector signal is closed when the temperature is normal and open when the thermal protector is activated. Do not exceed 3 A or 30 V.

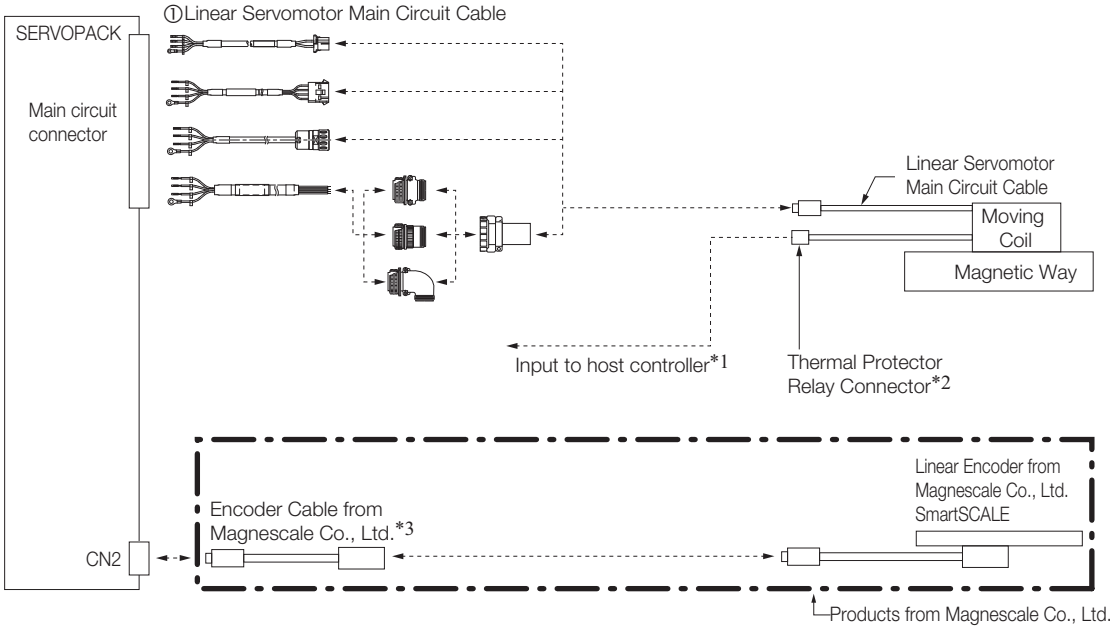

*1. Cables to connect to the host controller are not provided by Yaskawa.
Refer to the following manual for information on connector models.
📖 **Σ-7-Series AC Servo Drive Peripheral Device Selection Manual (Manual No.: SIEP S800001 32)**

*2. Only SGLFW2 Servomotors come equipped with Thermal Protector Relay Connectors.

*3. Use an Encoder Cable from Magnescale Co., Ltd. Contact Magnescale Co., Ltd. for detailed Encoder Cable specifications.

No.	Cable Type	Reference		
		SGLG	SGLF	SGLT
①	Linear Servomotor Main Circuit Cable	page 255	page 280	page 303

Connections to Linear Encoders from Mitutoyo Corporation

◆ ST78□A/ST13□□ Linear Encoders

Important

1. You cannot use a ST78□A Linear Encoder together with a Linear Servomotor with a Polarity Sensor.
2. If you use an SGLFW2 Servomotor, input the thermal protector signal from the Linear Servomotor to the host controller. The thermal protector signal is closed when the temperature is normal and open when the thermal protector is activated. Do not exceed 3 A or 30 V.

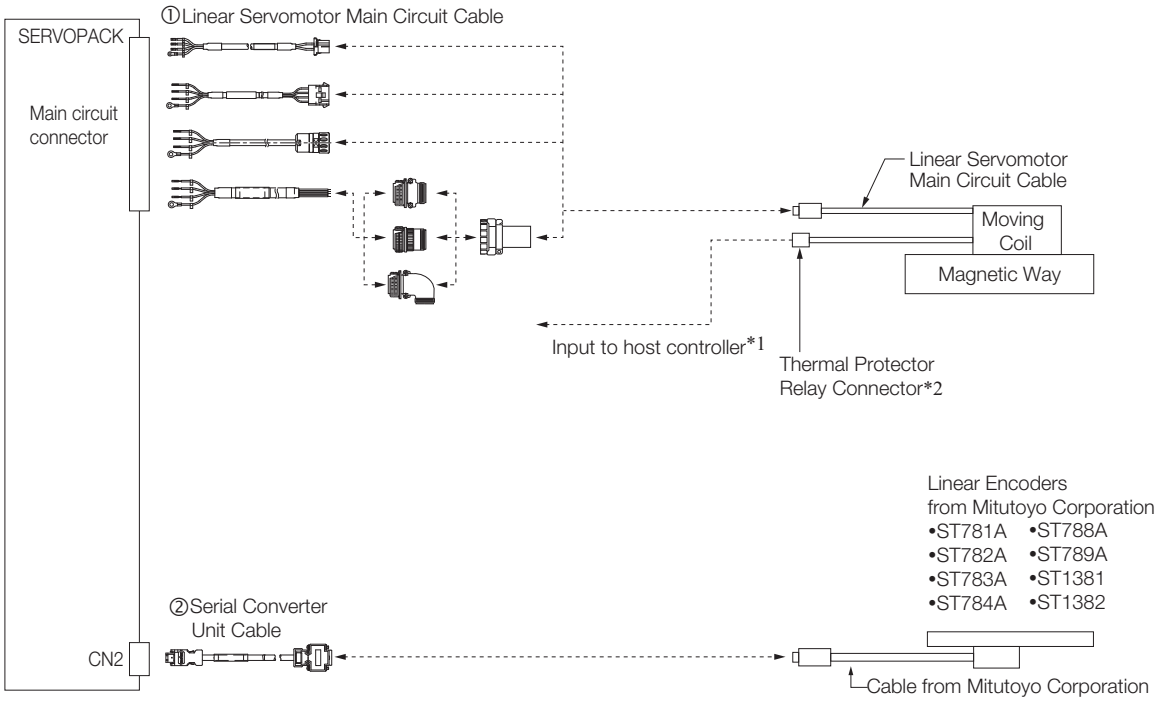

*1. Cables to connect to the host controller are not provided by Yaskawa.
Refer to the following manual for information on connector models.
📖 **Σ-7-Series AC Servo Drive Peripheral Device Selection Manual (Manual No.: SIEP S800001 32)**

*2. Only SGLFW2 Servomotors come equipped with Thermal Protector Relay Connectors.

No.	Cable Type	Reference		
		SGLG	SGLF	SGLT
①	Linear Servomotor Main Circuit Cable	page 255	page 280	page 303
②	Serial Converter Unit Cable	page 370		

Serial Converter Units

Order Number

Use the following tables to select the Serial Converter Unit.

JZDP - □00□ - □□□

Serial Converter Unit Model				
Code	Appearance	Applicable Linear Encoder	Polarity Sensor	Thermal Protector
H003 J003		From Heidenhain Corp.	None	None
H005 J005	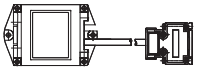	From Renishaw PLC	None	None
H006 J006	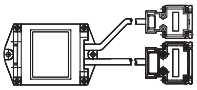	From Heidenhain Corp.	Yes	Yes
H008 J008	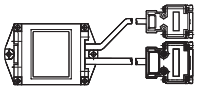	From Renishaw PLC	Yes	Yes

Applicable Linear Servomotor					
Servomotor Model		Code	Servomotor Model		Code
SGLGW - (coreless models) For Standard-force Magnetic Way	30A050C	250	SGLFW2- (models with F-type iron cores - 200V)	30A070A	628
				30A120A	629
	30A080C	251		30A230A	630
				45A200A	631
	40A140C	252		45A380A	632
				90A200A	633
	40A253C	253		90A380A	634
				90A560A	648
	40A365C	254		1DA380A	649
				1DA560A	650
	60A140C	258	SGLFW2- (models with F-type iron cores - 400V)	30D070A	651
				30D120A	652
	60A253C	259		30D230A	653
				45D200A	654
	60A365C	260		45D380A	655
				90D200A	657
	90A200C	264		90D380A	658
				90D560A	659
	90A370C	265		1DD380A	660
				1DD560A	661
	90A535C	266	SGLTW- (models with T-type iron cores)	20A170A	011
SGLGW - + SGLGM - □-M (coreless models) For High-force Magnetic Way	40A140C	255		20A320A	012
	40A253C	256		20A460A	013
	40A365C	257		35A170A	014
	60A140C	261		35A320A	015
	60A253C	262		35A460A	016
	60A365C	263		35A170H	105
SGLFW- (Earlier models with F-type iron cores)	20A090A	017		35A320H	106
	20A120A	018		50A170H	108
	35A120A	019		50A320H	109
	35A230A	020		40A400B	185
	50A200B	181		40A600B	186
	50A380B	182		80A400B	187
	1ZA200B	183		80A600B	188
	1ZA380B	184			

Note: 1. Code H□□□ for 8 bit interpolation, Code J□□□ for 12 bit interpolation

2. Refer to the following manual for detailed specifications of the Serial Converter Units.
   📖 **Σ-7-Series AC Servo Drive Peripheral Device Selection Manual (Manual No.: SIEP S800001 32)**

3. Contact your Yaskawa representative for information on the water cooling specifications of the SGLFW2.

Serial Converter Unit Cables

Linear Servomotor Model	Length (L)	Order Number	Appearance
All Models	1 m	JZSP-CLP70-01-E	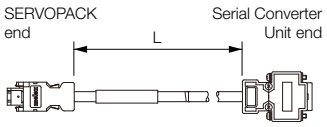
	3 m	JZSP-CLP70-03-E	
	5 m	JZSP-CLP70-05-E	
	10 m	JZSP-CLP70-10-E	
	15 m	JZSP-CLP70-15-E	
	20 m	JZSP-CLP70-20-E	

Sensor Cables

Linear Servomotor Model	Length (L)	Order Number	Appearance
SGLGW-□□A SGLFW-□□A SGLTW-□□A	1 m	JZSP-CLL10-01-E	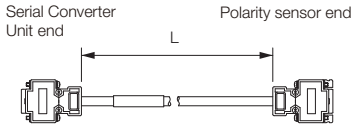
	3 m	JZSP-CLL10-03-E	
	5 m	JZSP-CLL10-05-E	
	10 m	JZSP-CLL10-10-E	
	15 m	JZSP-CLL10-15-E	
SGLFW2-□□A□□□AS□ (With Polarity Sensor)	1 m	JZSP-CL2L100-01-E	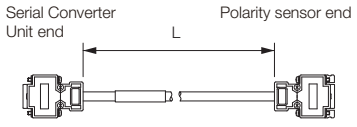
	3 m	JZSP-CL2L100-03-E	
	5 m	JZSP-CL2L100-05-E	
	10 m	JZSP-CL2L100-10-E	
	15 m	JZSP-CL2L100-15-E	
SGLFW2-□□A□□□AT□ (Without Polarity Sensor)	1 m	JZSP-CL2TH00-01-E	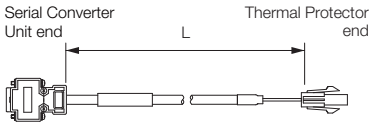
	3 m	JZSP-CL2TH00-03-E	
	5 m	JZSP-CL2TH00-05-E	
	10 m	JZSP-CL2TH00-10-E	
	15 m	JZSP-CL2TH00-15-E	

Linear Encoder Cables

Name	Linear Servomotor Model	Length * (L)	Order Number	Appearance
For linear encoder from Renishaw PLC	All Models	1 m	JZSP-CLL00-01-E	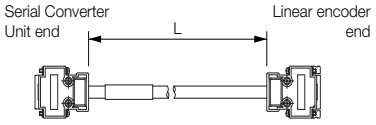
		3 m	JZSP-CLL00-03-E	
		5 m	JZSP-CLL00-05-E	
		10 m	JZSP-CLL00-10-E	
		15 m	JZSP-CLL00-15-E	
For linear encoder from Heidenhain Corporation		1 m	JZSP-CLL30-01-E	
		3 m	JZSP-CLL30-03-E	
		5 m	JZSP-CLL30-05-E	
		10 m	JZSP-CLL30-10-E	
		15 m	JZSP-CLL30-15-E	

* When using a JZDP-J00□-□□□-E Serial Converter Unit, do not exceed a cable length of 3 m.

SGLFW (Earlier Models with F-type Iron Cores)

Model Designations

SGLFW Models

◆ Moving Coil

S G L F W - 20 A 090 A P □

Linear Σ Series Linear Servo Motors | 1st digit | 2nd digit | 3rd+4th digits | 5th digit | 6th+7th+8th digits | 9th digit | 10th digit | 11th digit

1st digit Servo Motor Type

Code	Specification
F	With F-type iron core

2nd digit Moving Coil/Magnetic Way

Code	Specification
W	Moving Coil

3rd+4th digits Magnet Height

Code	Specification
20	20 mm
35	36 mm
50	47.5 mm
1Z	95 mm

5th digit Voltage

Code	Specification
A	200 VAC

6th+7th+8th digits Length of Moving Coil

Code	Specification
090	91 mm
120	127 mm
200	215 mm
230	235 mm
380	395 mm

9th digit Design Revision Order

A, B ...

10th digit Sensor Specification

Code	Specification
P	With polarity sensor
None	Without polarity sensor

11th digit Connector for Servo Motor Main Circuit Cable

Code	Specification	Applicable Models
None	Connector from Tyco Electronics Japan G.K.	All models
D	Connector from Interconnectron GmbH	SGLFW-35, -50, -1Z□200B

■ Non Stock Items

Note: This information is provided to explain model numbers. It is not meant to imply that models are available for all combinations of codes.

◆ Magnetic Way

S G L F M - 20 324 A □

Linear Σ Series Linear Servo Motors | 1st digit | 2nd digit | 3rd+4th digits | 5th+6th+7th digits | 8th digit | 9th digit

1st digit Servo Motor Type

(Same as for the Moving Coil.)

2nd digit Moving Coil/Magnetic Way

Code	Specification
M	Magnetic Way

3rd+4th digits Magnet Height

(Same as for the Moving Coil.)

5th+6th+7th digits Length of Magnetic Way

Code	Specification
324	324 mm
405	405 mm
540	540 mm
675	675 mm
756	756 mm
945	945 mm

8th digit Design Revision Order

A, B ...

9th digit Options

Code	Specification
None	Without options
C	With magnet cover

■ Non Stock Items

Precautions on Moving Coils with Polarity Sensors

Note

When you use a Moving Coil with a Polarity Sensor, the Magnetic Way must cover the bottom of the polarity sensor. Refer to the example that shows the correct installation.
When determining the length of the Moving Coil's stroke or the length of the Magnetic Way, consider the total length (L) of the Moving Coil and the polarity sensor. Refer to the following table.

Correct Installation

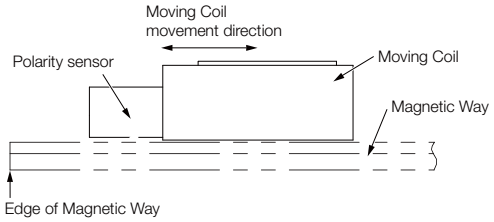

Incorrect Installation

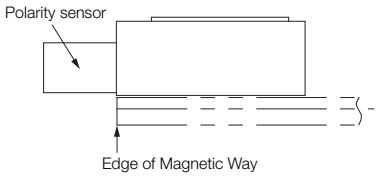

◆ Total Length of Moving Coil with Polarity Sensor

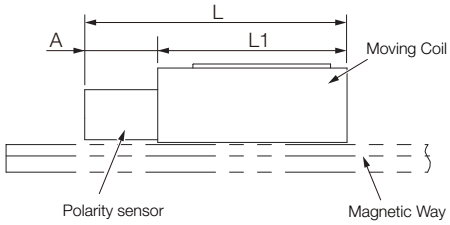

Moving Coil Model SGLFW-	Length of Moving Coil, L1 [mm]	Length of Polarity Sensor, A [mm]	Total Length, L [mm]
20A090AP	91	22	113
20A120AP	127		149
35A120AP□	127	22	149
35A230AP□	235		257
50A200BP□	215	22	237
50A380BP□	395		417
1ZA200BP□	215	22	237
1ZA380BP	395		417

Specifications and Ratings: SGLFW Models

Specifications

Linear Servo Motor Moving Coil Model SGLFW-		20A		35A		50A		1ZA	
		090A	120A	120A	230A	200B	380B	200B	380B
Time Rating		Continuous							
Thermal Class		B							
Insulation Resistance		500 VDC, 10 MΩ min.							
Withstand Voltage		1,500 VAC for 1 minute							
Excitation		Permanent magnet							
Cooling Method		Self-cooled							
Protective Structure		IP00							
Environmental Conditions	Surrounding Air Temperature	0°C to 40°C (with no freezing)							
	Surrounding Air Humidity	20% to 80% relative humidity (with no condensation)							
	Installation Site	• Must be indoors and free of corrosive and explosive gases. • Must be well-ventilated and free of dust and moisture. • Must facilitate inspection and cleaning. • Must have an altitude of 1,000 m or less. • Must be free of strong magnetic fields.							
Shock Resistance	Impact Acceleration Rate	196 m/s^2							
	Number of Impacts	2 times							
Vibration Resistance	Vibration Acceleration Rate	49 m/s^2 (the vibration resistance in three directions, vertical, side-to-side, and front-to-back)							

Ratings

Linear Servo Motor Moving Coil Model SGLFW-			20A		35A		50A		1ZA	
			090A	120A	120A	230A	200B	380B	200B	380B
Rated Motor Speed (Reference Speed during Speed Control)[*1]		m/s	5.0	3.5	2.5	3.0	1.5	1.5	1.5	1.5
Maximum Speed[*1]		m/s	5.0	5.0	5.0	5.0	5.0	5.0	4.9	4.9
Rated Force[*1, *2]		N	25	40	80	160	280	560	560	1120
Maximum Force[*1]		N	86	125	220	440	600	1200	1200	2400
Rated Current[*1]		Arms	0.70	0.80	1.4	2.8	5.0	10.0	8.7	17.5
Maximum Current[*1]		Arms	3.0	2.9	4.4	8.8	12.4	25.0	21.6	43.6
Moving Coil Mass		kg	0.70	0.90	1.3	2.3	3.5	6.9	6.4	12
Force Constant		N/Arms	36.0	54.0	62.4	62.4	60.2	60.2	69.0	69.0
BEMF Constant		Vrms/(m/s)/ phase	12.0	18.0	20.8	20.8	20.1	20.1	23.0	23.0
Motor Constant		$N/\sqrt{W}$	7.95	9.81	14.4	20.4	34.3	48.5	52.4	74.0
Electrical Time Constant		ms	3.2	3.3	3.6	3.6	16	16	18	18
Mechanical Time Constant		ms	11	9.4	6.3	5.5	3.0	2.9	2.3	2.1
Thermal Resistance (with Heat Sink)		K/W	4.35	3.19	1.57	0.96	0.56	0.38	0.47	0.20
Thermal Resistance (without Heat Sink)		K/W	7.69	5.02	4.10	1.94	1.65	0.95	1.30	0.73
Magnetic Attraction		N	310	460	810	1590	1650	3260	3300	6520
Combined Magnetic Way, SGLFM-			20□ □ □ A□		35□ □ □ A□		35□ □ □ A□		35□ □ □ A□	
Combined Serial Converter Unit, JZDP-□ □ □ □			017	018	019	020	181	182	183	184
Applicable SERVOPACKs	SGD7S-		1R6A	1R6A	1R6A	3R8A	5R5A	120A	120A	200A
	SGD7W-		1R6A	1R6A	1R6A	5R5A	5R5A	–	–	–

*1. These values are for operation in combination with a SERVOPACK when the temperature of the armature winding is 100°C. The values for other items are at 20°C. These are typical values.

*2. The rated forces are the continuous allowable force values at a surrounding air temperature of 40°C with an aluminum heat sink of the dimensions given in the following table.

- Heat Sink Dimensions
  - 125 mm × 125 mm × 13 mm: SGLFW-20A090A and -20A120A
  - 254 mm × 254 mm × 25 mm: SGLFW-35A120A and -35A230A
  - 400 mm × 500 mm × 40 mm: SGLFW-50A200B, 50A380B, and -1ZA200B
  - 600 mm × 762 mm × 50 mm: SGLFW-1ZA380B

Force-Motor Speed Characteristics

A : Continuous duty zone ———— (solid lines): With three-phase 200-V input
B : Intermittent duty zone - - - - - - - - (dotted lines): With single-phase 200-V input

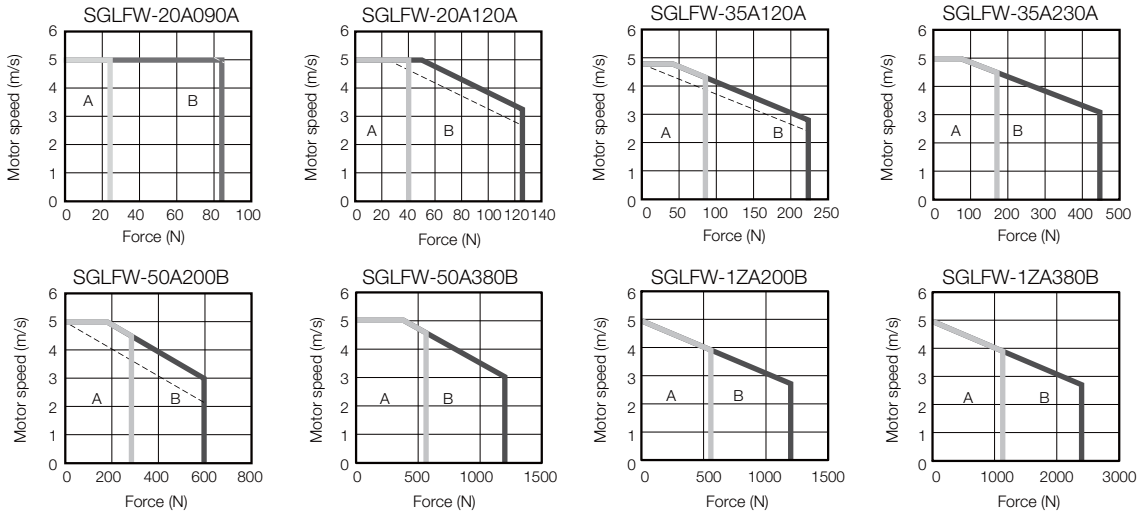

Note: 1. These values are for operation in combination with a SERVOPACK when the temperature of the armature winding is 100°C. These are typical values.

2. The characteristics in the intermittent duty zone depend on the power supply voltage.

3. If the effective force is within the allowable range for the rated force, the Servo Motor can be used within the intermittent duty zone.

4. If you use a Servo Motor Main Circuit Cable that exceeds 20 m, the intermittent duty zone in the torque-motor speed characteristics will become smaller because the voltage drop increases.

Servo Motor Overload Protection Characteristics

The overload detection level is set for hot start conditions with a Servo Motor surrounding air temperature of 40°C.

SGLFW-20A

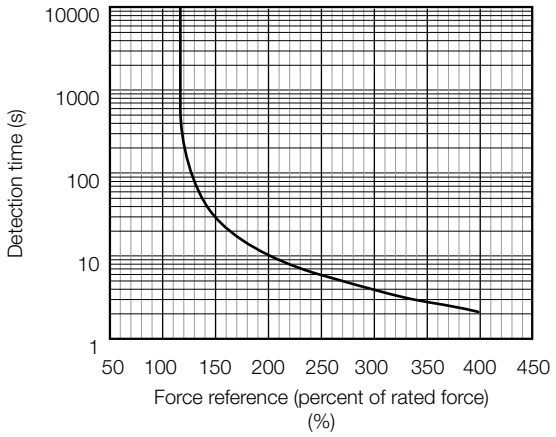

SGLFW-35A

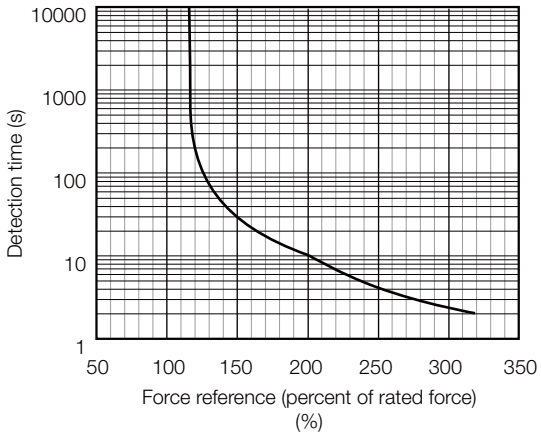

SGLFW-50A and -1ZA

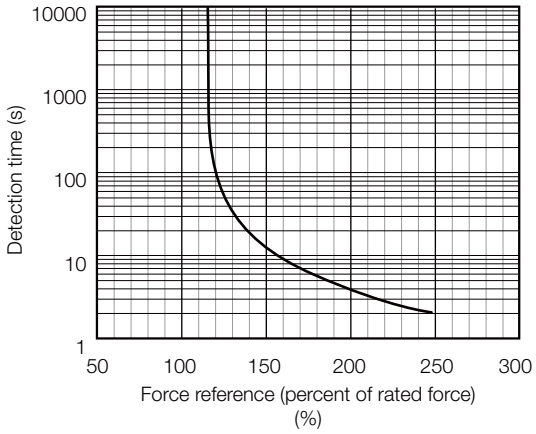

Note: The above overload protection characteristics do not mean that you can perform continuous duty operation with an output of 100% or higher. Use the Servo Motor so that the effective force remains within the continuous duty zone given in *Force-Motor Speed Characteristics* on page 376.

External Dimensions

SGLFW-20

◆ Moving Coils: SGLFW-20A□ □ □ A□

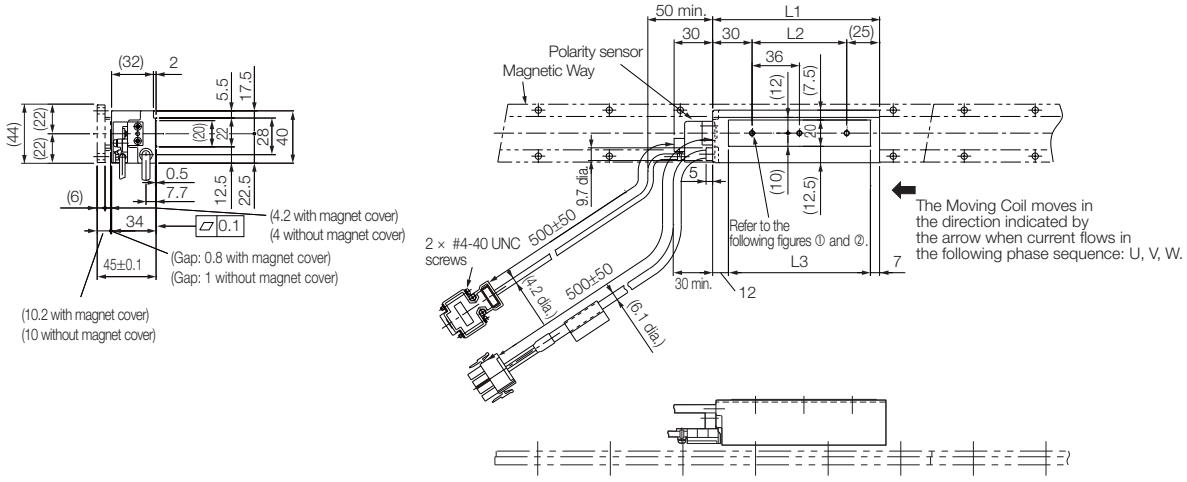

①SGLFW-20A090A□

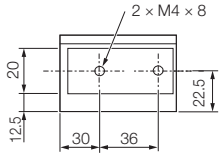

②SGLFW-20A120A□

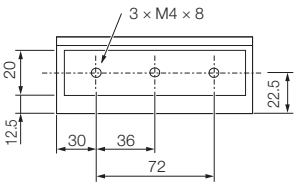

Unit: mm

Moving Coil Model SGLFW-	L1	L2	L3	Approx. Mass [kg]
20A090A□	91	36	72	0.7
20A120A□	127	72	108	0.9

Note: The above dimensional drawing gives the dimensions for both models with polarity sensors and models without polarity sensors.
Refer to the following section for the connector specifications for the Sensor Cable and Servo Motor Main Circuit Cable.

☞ SGLFW-20A□ □ □ A□ and -35A□ □ □ A□ Moving Coils (page 389)

◆ Magnetic Ways: SGLFM-20□ □ □ A

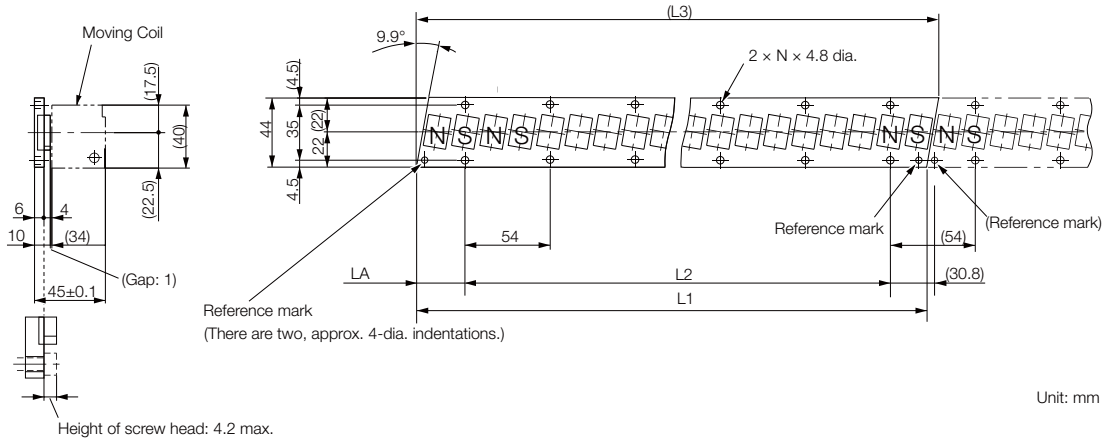

Note: More than one Magnetic Way can be connected. Connect the Magnetic Ways so that the reference marks on them are aligned in the same direction as shown in the figure.

Magnetic Way Model SGLFM-	L1	L2	(L3)	LA	N	Approx. Mass [kg]
20324A	$324^{-0.1}_{-0.3}$	270 (54 × 5)	(331.6)	$30.8^{0}_{-0.2}$	6	0.9
20540A	$540^{-0.1}_{-0.3}$	486 (54 × 9)	(547.6)	$30.8^{0}_{-0.2}$	10	1.4
20756A	$756^{-0.1}_{-0.3}$	702 (54 × 13)	(763.6)	$30.8^{0}_{-0.2}$	14	2

SGLFW-35

◆ Moving Coils: SGLFW-35A□ □ □ A□

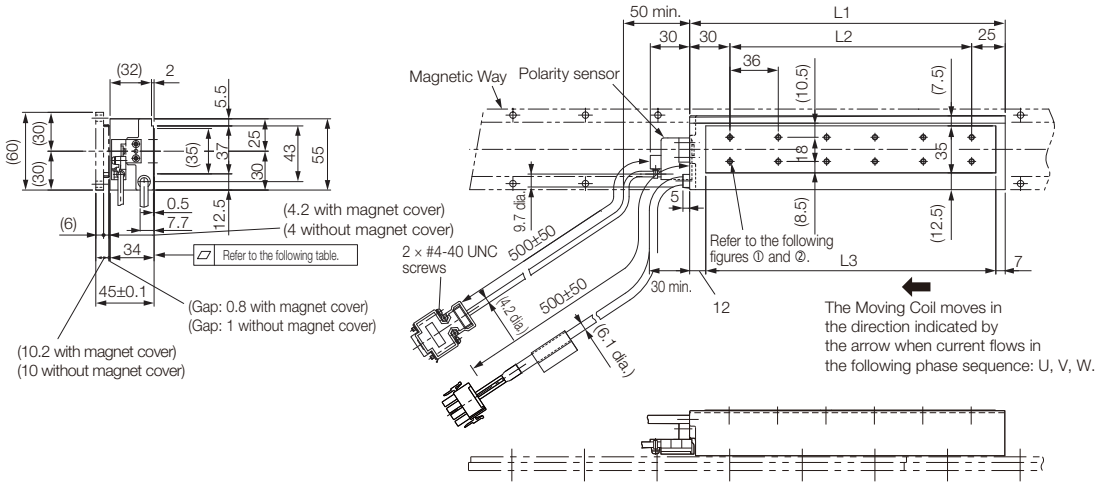

①SGLFW-35A120A□

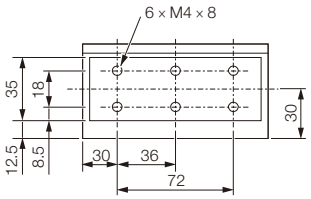

②SGLFW-35A230A□

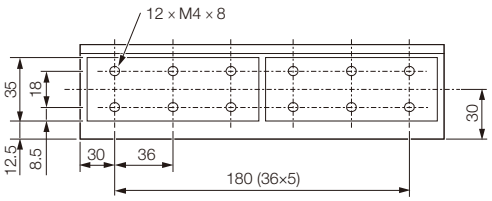

Unit: mm

Moving Coil Model SGLFW-	L1	L2	L3	Approx. Mass [kg]
35A120A□	127	72	108	1.3
35A230A□	235	180	216	2.3

Note: The above dimensional drawing gives the dimensions for both models with polarity sensors and models without polarity sensors.
Refer to the following section for the connector specifications for the Sensor Cable and Servo Motor Main Circuit Cable.

☞ SGLFW-20A□ □ □ A□ and -35A□ □ □ A□ Moving Coils (page 389)

◆ Moving Coils: SGLFW-35A□ □ □ A□ D

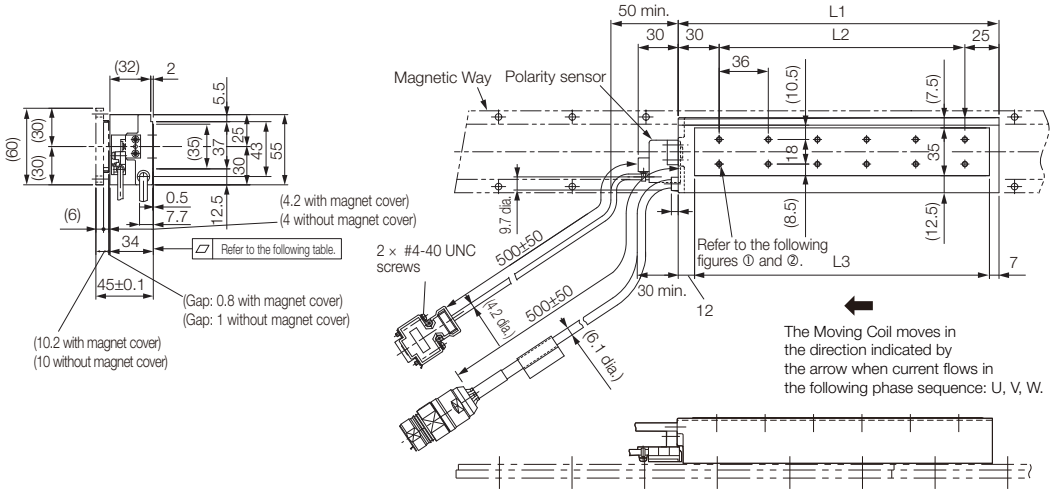

①SGLFW-35A120A□D

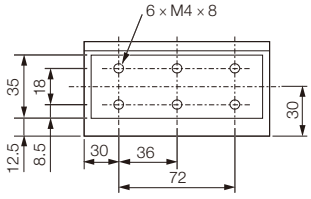

②SGLFW-35A230A□D

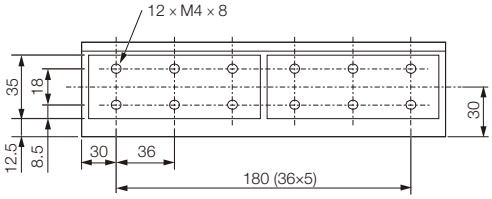

Unit: mm

Moving Coil Model SGLFW-	L1	L2	L3	Approx. Mass [kg]
35A120A□D	127	72	108	1.3
35A230A□D	235	180	216	2.3

Note: The above dimensional drawing gives the dimensions for both models with polarity sensors and models without polarity sensors.

Refer to the following section for the connector specifications for the Sensor Cable and Servo Motor Main Circuit Cable.

☞ SGLFW-35A□ □ □ A□ D and -50A□ □ □ B□ D Moving Coils (page 390)

◆ Magnetic Ways: SGLFM-35□ □ □ A

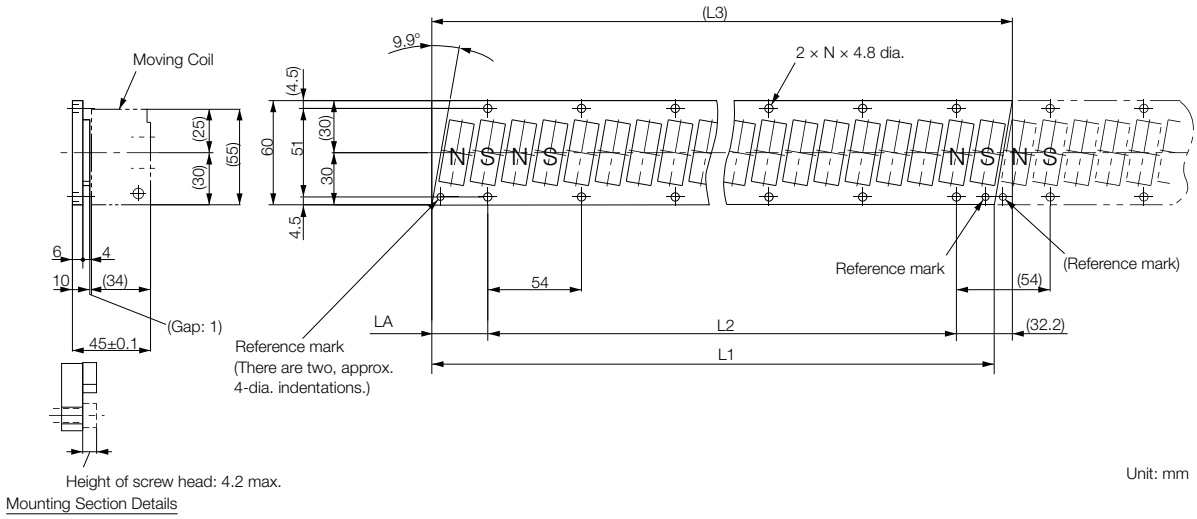

Note: More than one Magnetic Way can be connected. Connect the Magnetic Ways so that the reference marks on them are aligned in the same direction as shown in the figure.

Magnetic Way Model SGLFM-	L1	L2	(L3)	LA	N	Approx. Mass [kg]
35324A	324 $^{-0.1}_{-0.3}$	270 (54 × 5)	(334.4)	32.2 $^{0}_{-0.2}$	6	1.2
35540A	540 $^{-0.1}_{-0.3}$	486 (54 × 9)	(550.4)	32.2 $^{0}_{-0.2}$	10	2
35756A	756 $^{-0.1}_{-0.3}$	702 (54 × 13)	(766.4)	32.2 $^{0}_{-0.2}$	14	2.9

SGLFW-50

◆ Moving Coils: SGLFW-50A□ □ □ B□

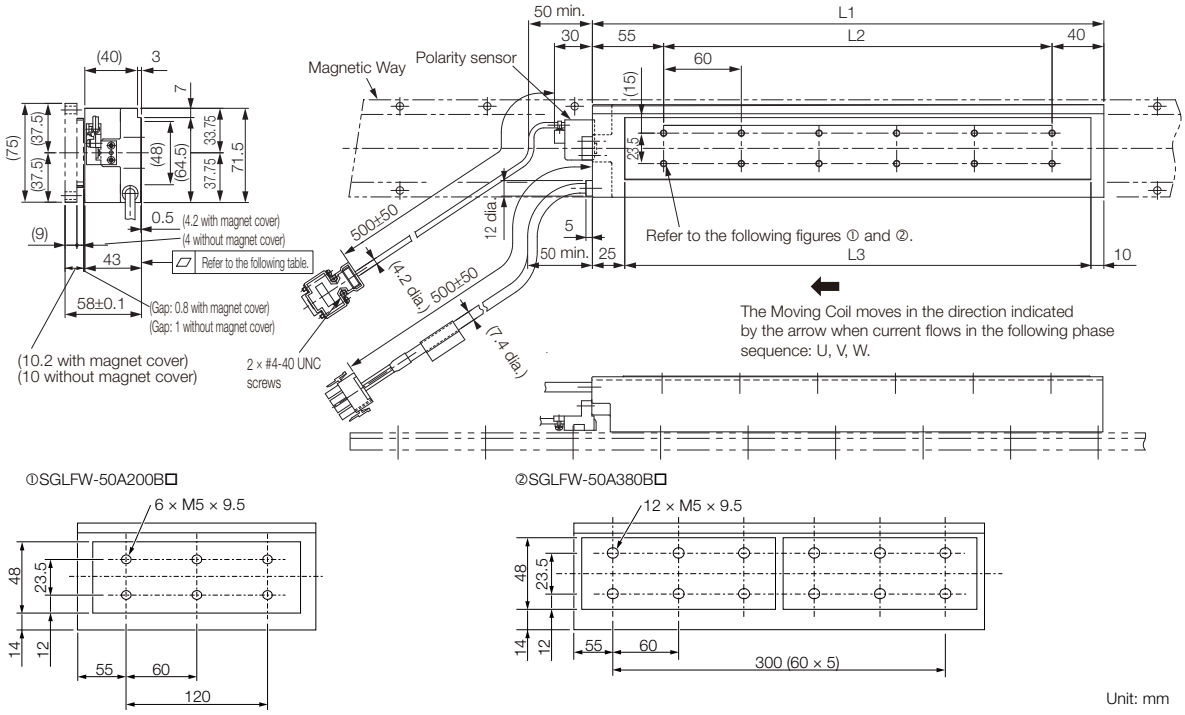

Unit: mm

Moving Coil Model SGLFW-	L1	L2	L3	Approx. Mass [kg]
50A200B□	215	120	180	3.5
50A380B□	395	300	360	6.9

Note: The above dimensional drawing gives the dimensions for both models with polarity sensors and models without polarity sensors.
Refer to the following section for the connector specifications for the Sensor Cable and Servo Motor Main Circuit Cable.

☞ SGLFW-50A□ □ □ B□ Moving Coils (page 391)

◆ Moving Coils: SGLFW-50A□ □ □ B□ D

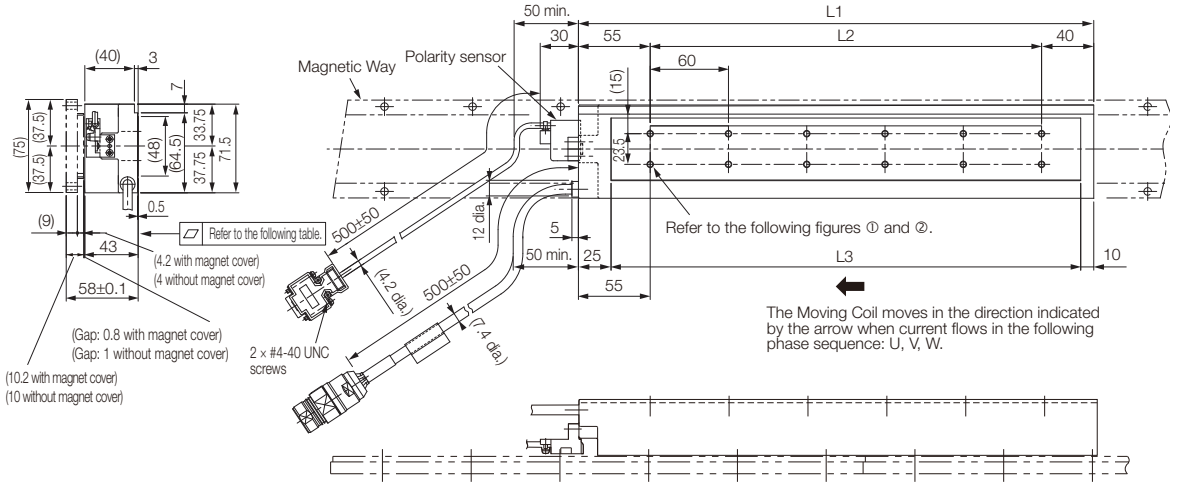

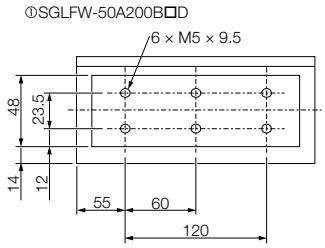

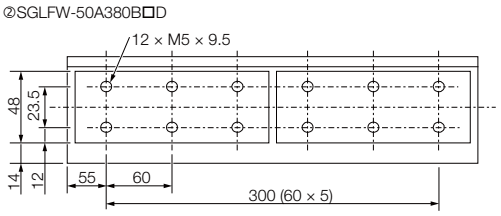

Unit: mm

Moving Coil Model SGLFW-	L1	L2	L3	Flatness	Approx. Mass [kg]
50A200B□D	215	120	180	0.2	3.5
50A380B□D	395	300	360	0.3	6.9

Note: The above dimensional drawing gives the dimensions for both models with polarity sensors and models without polarity sensors.
Refer to the following section for the connector specifications for the Sensor Cable and Servo Motor Main Circuit Cable.

☞ SGLFW-35A□ □ □ A□ D and -50A□ □ □ B□ D Moving Coils (page 390)

◆ Magnetic Ways: SGLFM-50□ □ □ A

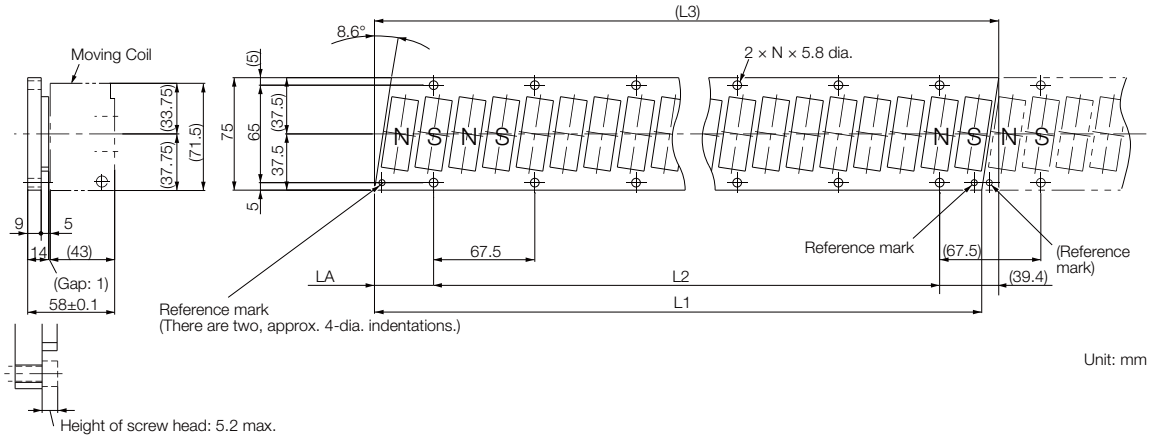

Note: More than one Magnetic Way can be connected. Connect the Magnetic Ways so that the reference marks on them are aligned in the same direction as shown in the figure.

Magnetic Way Model SGLFM-	L1	L2	(L3)	LA	N	Approx. Mass [kg]
50405A	$405^{-0.1}_{-0.3}$	337.5 (67.5 × 5)	(416.3)	$39.4^{0}_{-0.2}$	6	2.8
50675A	$675^{-0.1}_{-0.3}$	607.5 (67.5 × 9)	(686.3)	$39.4^{0}_{-0.2}$	10	4.6
50945A	$945^{-0.1}_{-0.3}$	877.5 (67.5 × 13)	(956.3)	$39.4^{0}_{-0.2}$	14	6.5

SGLFW-1Z

◆ Moving Coils: SGLFW-1ZA□ □ □ B□

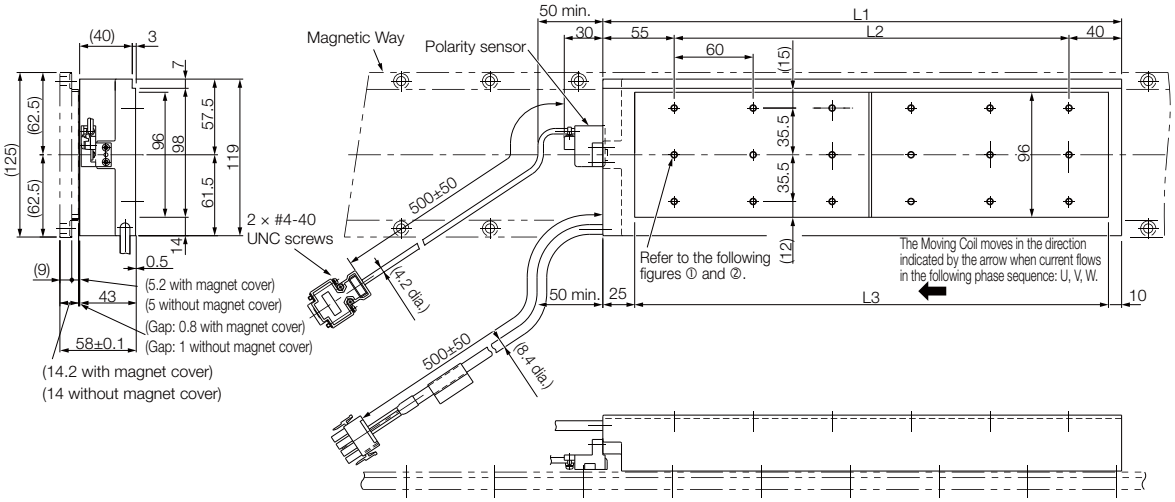

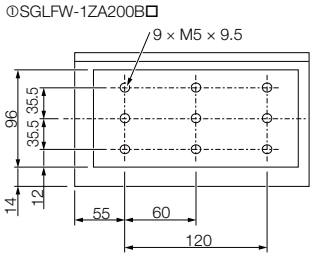

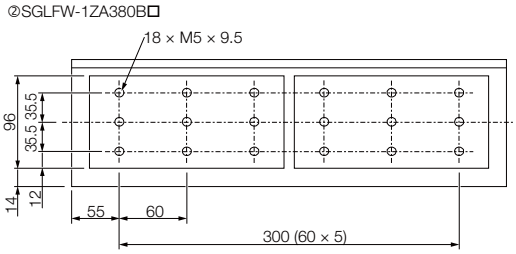

Unit: mm

Moving Coil Model SGLFW-	L1	L2	L3	Approx. Mass [kg]
1ZA200B□	215	120	180	6.4
1ZA380B□	395	300	360	11.5

Note: The above dimensional drawing gives the dimensions for both models with polarity sensors and models without polarity sensors.
Refer to the following section for the connector specifications for the Sensor Cable and Servo Motor Main Circuit Cable.

☞ SGLFW-1ZA□ □ □ B□ Moving Coils (page 392)

◆ Moving Coils: SGLFW-1ZA200B□ D

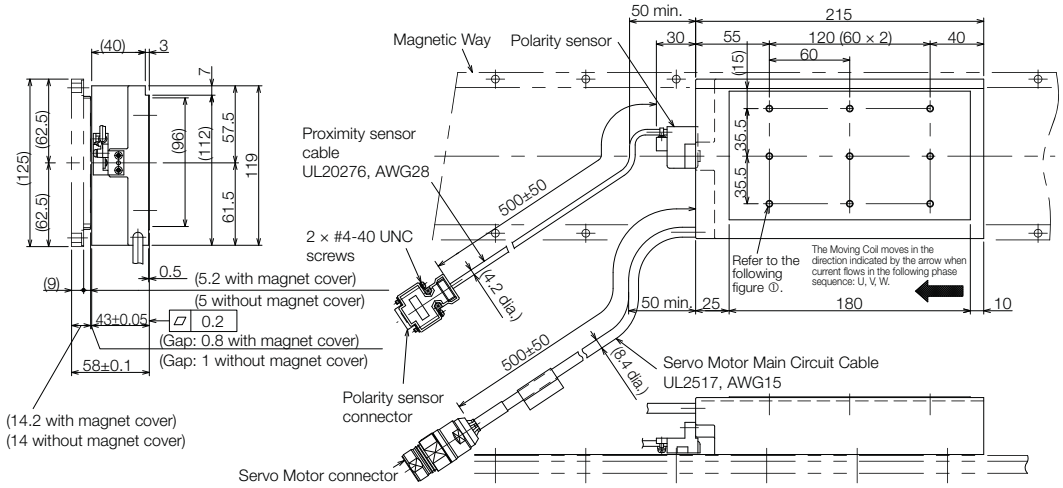

①SGLFW-1ZA200B□D

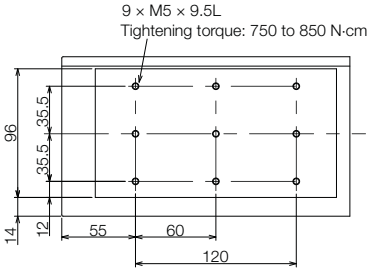

Approx. mass: 6.4 kg

Unit: mm

Note: The above dimensional drawing gives the dimensions for both models with polarity sensors and models without polarity sensors.

Refer to the following section for the connector specifications for the Sensor Cable and Servo Motor Main Circuit Cable.

☞ SGLFW-1ZA200B□ D Moving Coils (page 393)

◆ Magnetic Ways: SGLFM-1Z□ □ □ A

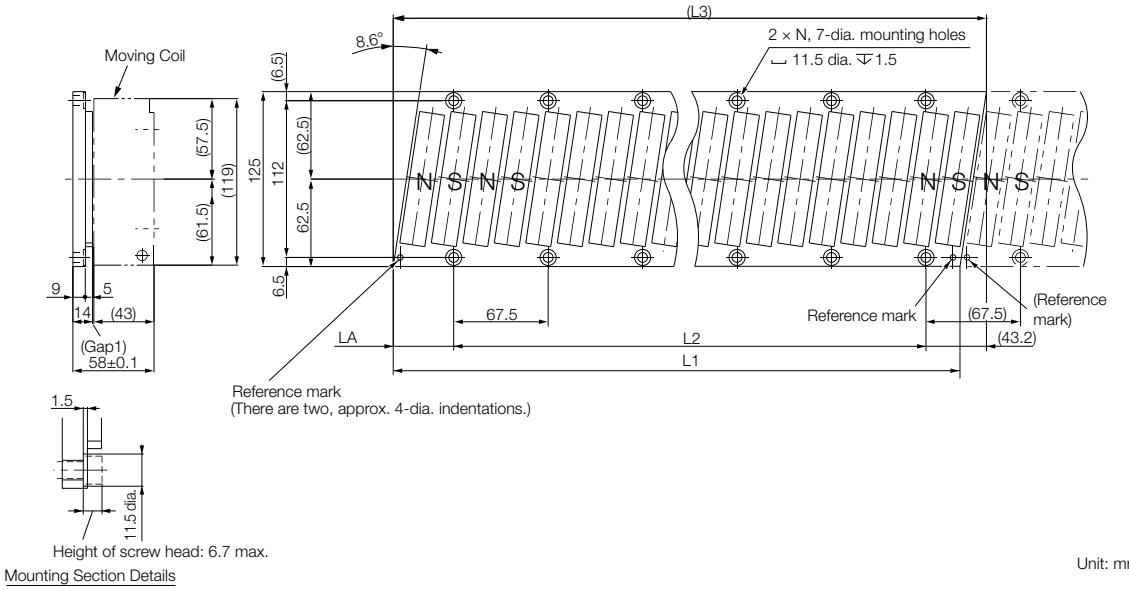

Unit: mm

Note: More than one Magnetic Way can be connected. Connect the Magnetic Ways so that the reference marks on them are aligned in the same direction as shown in the figure.

Magnetic Way Model SGLFM-	L1	L2	(L3)	LA	N	Approx. Mass [kg]
1Z405A	$405^{-0.1}_{-0.3}$	337.5 (67.5 × 5)	(423.9)	$43.2^{0}_{-0.2}$	6	5
1Z675A	$675^{-0.1}_{-0.3}$	607.5 (67.5 × 9)	(693.9)	$43.2^{0}_{-0.2}$	10	8.3
1Z945A	$945^{-0.1}_{-0.3}$	877.5 (67.5 × 13)	(963.9)	$43.2^{0}_{-0.2}$	14	12

◆ SGLFW-20A□ □ □ A□ and -35A□ □ □ A□ Moving Coils

• Servo Motor Connector

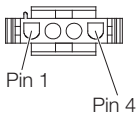

Plug: 350779-1
Pins: 350218-3 or 350547-3 (No.1 to 3)
350654-1 or 350669-1 (No. 4)
Tyco Electronics Japan G.K.

Mating Connector
Cap: 350780-1
Socket: 350536-3 or 350550-3

• Polarity Sensor Connector



Pin connector: 17JE-23090-02 (D8C) -CG
From DDK Ltd.

Mating Connector
Socket connector: 17JE-13090-02 (D8C) A-CG
Studs: 17L-002C or 17L-002C1

• Polarity Sensor Output Signal

The figure on the right shows the relationship between the Su, Sv, and Sw polarity sensor output signals and the inverse power of each motor phase Vu, Vv, and Vw when the Moving Coil moves in the direction indicated by the arrow in the dimensional drawings of the Moving Coil.

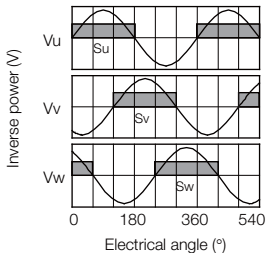

◆ SGLFW-35A□ □ □ A□ D and -50A□ □ □ B□ D Moving Coils

- Servo Motor Connector



Extension: ARRA06AMRPN182
Pins: 021.279.1020
From Interconnectron GmbH

Mating Connector
Plug: APRA06BFRDN170
Socket: 020.105.1020

- Polarity Sensor Connector



Pin connector: 17JE-23090-02 (D8C) -CG
From DDK Ltd.

Mating Connector
Socket connector: 17JE-13090-02 (D8C) A-CG
Studs: 17L-002C or 17L-002C1

- Polarity Sensor Output Signal

The figure on the right shows the relationship between the Su, Sv, and Sw polarity sensor output signals and the inverse power of each motor phase Vu, Vv, and Vw when the Moving Coil moves in the direction indicated by the arrow in the dimensional drawings of the Moving Coil.

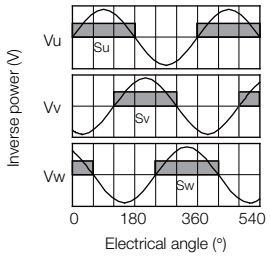

◆ SGLFW-50A□ □ □ B□ Moving Coils

• Servo Motor Connector

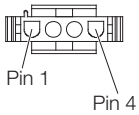

Plug: 350779-1
Pins: 350218-3 or 350547-3 (No.1 to 3)
350654-1 or 350669-1 (No. 4)
Tyco Electronics Japan G.K.

Mating Connector
Cap: 350780-1
Socket: 350537-3 or 350550-3

• Polarity Sensor Connector

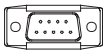

Pin connector: 17JE-23090-02 (D8C) -CG
From DDK Ltd.

Mating Connector
Socket connector: 17JE-13090-02 (D8C) A-CG
Studs: 17L-002C or 17L-002C1

• Polarity Sensor Output Signal

The figure on the right shows the relationship between the Su, Sv, and Sw polarity sensor output signals and the inverse power of each motor phase Vu, Vv, and Vw when the Moving Coil moves in the direction indicated by the arrow in the dimensional drawings of the Moving Coil.

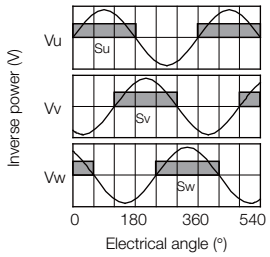

◆ SGLFW-1ZA□ □ □ B□ Moving Coils

• Servo Motor Connector

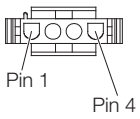

Plug: 350779-1
Pins: 350218-3 or 350547-3 (No.1 to 3)
350654-1 or 350669-1 (No. 4)
Tyco Electronics Japan G.K.

Mating Connector
Cap: 350780-1
Socket: 350537-3 or 350550-3

• Polarity Sensor Connector

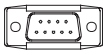

Pin connector: 17JE-23090-02 (D8C) -CG
From DDK Ltd.

Mating Connector
Socket connector: 17JE-13090-02 (D8C) A-CG
Studs: 17L-002C or 17L-002C1

• Polarity Sensor Output Signal

The figure on the right shows the relationship between the Su, Sv, and Sw polarity sensor output signals and the inverse power of each motor phase Vu, Vv, and Vw when the Moving Coil moves in the direction indicated by the arrow in the dimensional drawings of the Moving Coil.

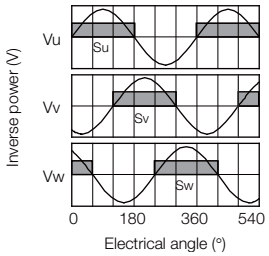

◆ SGLFW-1ZA200B□ D Moving Coils

• Servo Motor Connector

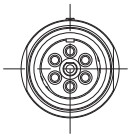

Extension: SROC06JMSCN169
Pins: 021.423.1020
From Interconnectron GmbH

Mating Connector
Plug: SPUC06KFSDN236
Socket: 020.030.1020

• Polarity Sensor Connector



Pin connector: 17JE-23090-02 (D8C) -CG
From DDK Ltd.

Mating Connector
Socket connector: 17JE-13090-02 (D8C) A-CG
Studs: 17L-002C or 17L-002C1

• Polarity Sensor Output Signal

The figure on the right shows the relationship between the Su, Sv, and Sw polarity sensor output signals and the inverse power of each motor phase Vu, Vv, and Vw when the Moving Coil moves in the direction indicated by the arrow in the dimensional drawings of the Moving Coil.

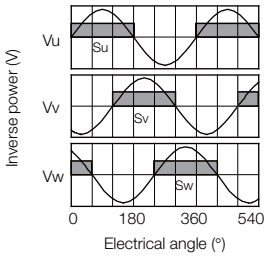

Selecting Cables

◆ System Configurations

Example: SGLFW Servo Motors with F-type Iron Cores

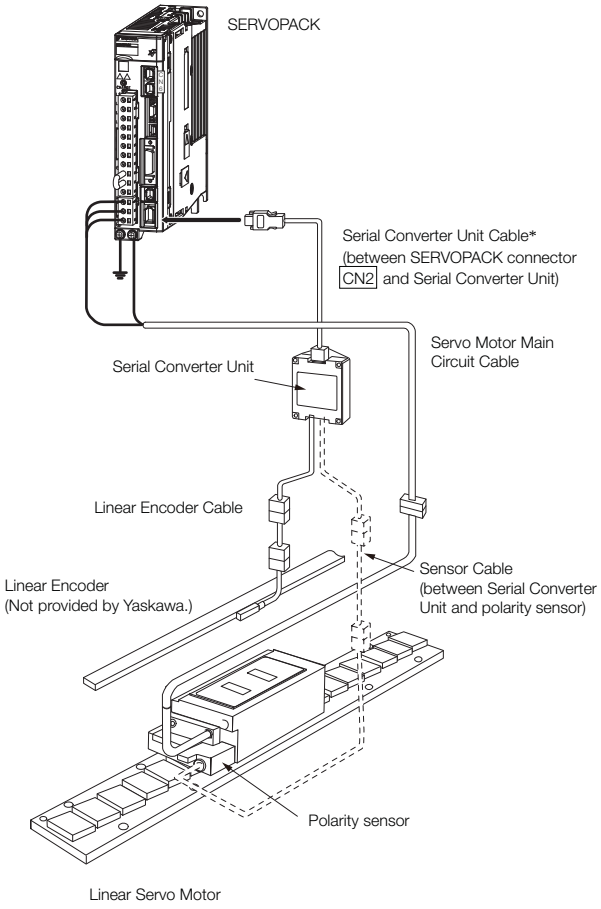

* You can connect directly to an absolute linear encoder.

Note: 1. The above system configurations are for SGLFW Servo Motors with F-type Iron Cores. Refer to the manual for the Linear Servo Motor for configurations with other models.

2. Refer to the following manual for the following information.
   - Cable dimensional drawings and cable connection specifications
   - Order numbers and specifications of individual connectors for cables
   - Order numbers and specifications for wiring materials

   📖 *Σ-7-Series AC Servo Drive Peripheral Device Selection Manual* (Manual No.: SIEP S800001 32)

Servo Motor Main Circuit Cables

Servo Motor Model	Length (L)	Order Number	Appearance
SGLFW-20A, -35A	1 m	JZSP-CLN11-01-E	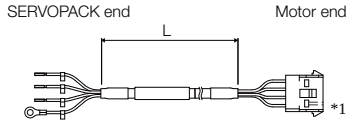
	3 m	JZSP-CLN11-03-E	
	5 m	JZSP-CLN11-05-E	
	10 m	JZSP-CLN11-10-E	
	15 m	JZSP-CLN11-15-E	
	20 m	JZSP-CLN11-20-E	
SGLFW-50A, -1ZA	1 m	JZSP-CLN21-01-E	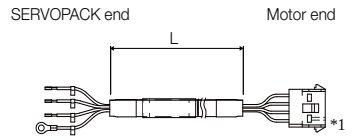
	3 m	JZSP-CLN21-03-E	
	5 m	JZSP-CLN21-05-E	
	10 m	JZSP-CLN21-10-E	
	15 m	JZSP-CLN21-15-E	
	20 m	JZSP-CLN21-20-E	
SGLFW- ☐☐A☐☐☐☐☐D	1 m	JZSP-CLN14-01-E	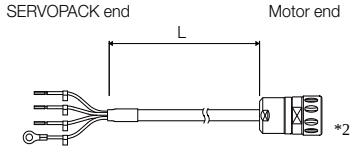
	3 m	JZSP-CLN14-03-E	
	5 m	JZSP-CLN14-05-E	
	10 m	JZSP-CLN14-10-E	
	15 m	JZSP-CLN14-15-E	
	20 m	JZSP-CLN14-20-E	

Note: Shaded model numbers are non-stock items

*1. Connector from Tyco Electronics Japan G.K.

*2. Connector from Interconnectron GmbH

*3. A connector is not provided on the Linear Servo Motor end. Obtain a connector according to your specifications. Refer to the next page for information on connectors.

Linear Encoder Cables

Name	Servo Motor Model	Length* (L)	Order Number	Appearance
For linear encoder from Renishaw PLC	All Models	1 m	JZSP-CLL00-01-E	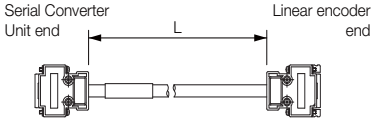
		3 m	JZSP-CLL00-03-E	
		5 m	JZSP-CLL00-05-E	
		10 m	JZSP-CLL00-10-E	
		15 m	JZSP-CLL00-15-E	
For linear encoder from Heidenhain Corporation		1 m	JZSP-CLL30-01-E	
		3 m	JZSP-CLL30-03-E	
		5 m	JZSP-CLL30-05-E	
		10 m	JZSP-CLL30-10-E	
		15 m	JZSP-CLL30-15-E	

* When using a JZDP-J00☐ - ☐☐☐ - E Serial Converter Unit, do not exceed a cable length of 3 m.

Serial Converter Unit Cables

Servo Motor Model	Length (L)	Order Number	Appearance
All Models	1 m	JZSP-CLP70-01-E	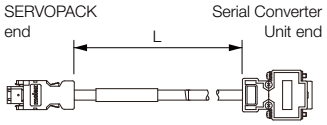
	3 m	JZSP-CLP70-03-E	
	5 m	JZSP-CLP70-05-E	
	10 m	JZSP-CLP70-10-E	
	15 m	JZSP-CLP70-15-E	
	20 m	JZSP-CLP70-20-E	

Sensor Cables

Servo Motor Model	Length (L)	Order Number	Appearance
SGLFW-□ □ A	1 m	JZSP-CLL10-01-E	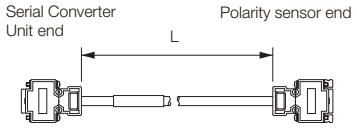
	3 m	JZSP-CLL10-03-E	
	5 m	JZSP-CLL10-05-E	
	10 m	JZSP-CLL10-10-E	
	15 m	JZSP-CLL10-15-E	

SERVOPACKs

Σ-7S Single-axis Analog Voltage/Pulse Train Reference SERVOPACKs 398

Σ-7S Single-axis MECHATROLINK-III Communications Reference SERVOPACKs 408

Σ-7S Single-axis EtherCAT Communications Reference SERVOPACKs 422

Σ-7W Two-axis MECHATROLINK-III Communications Reference SERVOPACKs 438

Σ-7W Two-axis EtherCAT Communications Reference SERVOPACKs 452

SERVOPACK External Dimensions 458

Σ-7S Single-axis Analog Voltage/Pulse Train Reference SERVOPACKs

Model Designations

SGD7S - R70 A 00 A

Σ-7 Series
Σ-7S SERVOPACKs

1st+2nd+3rd digits | 4th digit | 5th+6th digits | 7th digit

1st+2nd+3rd digits Maximum Applicable Motor Capacity

Voltage	Code	Specification
Three-phase, 200 VAC	R70*1	0.05 kW
	R90*1	0.1 kW
	1R6*1	0.2 kW
	2R8*1	0.4 kW
	3R8	0.5 kW
	5R5*1	0.75 kW
	7R6	1.0 kW
	120*3	1.5 kW
	180	2.0 kW
	200	3.0 kW
	330	5.0 kW
	470	6.0 kW
	550	7.5 kW
	590	11 kW
	780	15 kW
Single-phase, 100 VAC	R70	0.05 kW
	R90	0.1 kW
	2R1	0.2 kW
	2R8	0.4 kW

4th digit Voltage

Code	Specification
A	200 VAC
F	100 VAC

5th+6th digits Interface*2

Code	Specification
00	Analog voltage/pulse train reference

7th digit Design Revision Order

A

*1. You can use these models with either a single-phase or three-phase power supply input.

*2. The same SERVOPACKs are used for both Rotary Servo Motors and Linear Servo Motors.

*3. A model with a single-phase, 200-VAC power supply input is available as a hardware option (model: SGD7S-120A00A008).

Ratings and Specifications

Ratings

◆ Single-phase, 100 VAC

Model SGD7S-		R70F	R90F	2R1F	2R8F
Maximum Applicable Motor Capacity [kW]		0.05	0.1	0.2	0.4
Continuous Output Current [Arms]		0.66	0.91	2.1	2.8
Instantaneous Maximum Output Current [Arms]		2.1	3.2	6.5	9.3
Main Circuit	Power Supply	100 VAC to 120 VAC, -15% to +10%, 50/60 Hz			
	Input Current [Arms]*	1.5	2.5	5	10
Control Power Supply		100 VAC to 120 VAC, -15% to +10%, 50/60 Hz			
Power Supply Capacity [kVA]*		0.2	0.3	0.6	1.4
Power Loss*	Main Circuit Power Loss [W]	5.3	7.8	14.2	26.2
	Control Circuit Power Loss [W]	12	12	12	12
	Total Power Loss [W]	17.3	19.8	26.2	38.2
Regenerative Resistor	Minimum Allowable External Resistance [Ω]	40	40	40	40
Overvoltage Category		III			

* This is the net value at the rated load.

◆ Three-phase, 200 VAC

Model SGD7S-			R70A	R90A	1R6A	2R8A	3R8A	5R5A	7R6A	120A	180A	200A	330A
Maximum Applicable Motor Capacity [kW]			0.05	0.1	0.2	0.4	0.5	0.75	1.0	1.5	2.0	3.0	5.0
Continuous Output Current [Arms]			0.66	0.91	1.6	2.8	3.8	5.5	7.6	11.6	18.5	19.6	32.9
Instantaneous Maximum Output Current [Arms]			2.1	3.2	5.9	9.3	11	16.9	17	28	42	56	84.0
Main Circuit	Power Supply		200 VAC to 240 VAC, -15% to +10%, 50 Hz/60 Hz										
	Input Current [Arms]*		0.4	0.8	1.3	2.5	3.0	4.1	5.7	7.3	10	15	25
Control Power Supply			200 VAC to 240 VAC, -15% to +10%, 50 Hz/60 Hz										
Power Supply Capacity [kVA]*			0.2	0.3	0.5	1.0	1.3	1.6	2.3	3.2	4.0	5.9	7.5
Power Loss*	Main Circuit Power Loss [W]		5.1	7.3	13.5	24.0	20.1	43.8	53.6	65.8	111.9	113.8	263.7
	Control Circuit Power Loss [W]		17	17	17	17	17	17	17	22	22	22	27
	Built-in Regenerative Resistor Power Loss [W]		-	-	-	-	8	8	8	10	16	16	36.0
	Total Power Loss [W]		22.1	24.3	30.5	41.0	45.1	68.8	78.6	97.8	149.9	151.8	326.7
Regenerative Resistor	Built-In Regenerative Resistor	Resistance [Ω]	-	-	-	-	40	40	40	20	12	12	8
		Capacity [W]	-	-	-	-	40	40	40	60	60	60	180
	Minimum Allowable External Resistance [Ω]		40	40	40	40	40	40	40	20	12	12	8
Overvoltage Category			III										

* This is the net value at the rated load.

Model SGD7S-			470A	550A	590A	780A
Maximum Applicable Motor Capacity [kW]			6.0	7.5	11	15
Continuous Output Current [Arms]			46.9	54.7	58.6	78.0
Instantaneous Maximum Output Current [Arms]			110	130	140	170
Main Circuit	Power Supply		200 VAC to 240 VAC, -15% to +10%, 50 Hz/60 Hz			
	Input Current [Arms]*1		29	37	54	73
Control Power Supply			200 VAC to 240 VAC, -15% to +10%, 50 Hz/60 Hz			
Power Supply Capacity [kVA]*1			10.7	14.6	21.7	29.6
Power Loss*1	Main Circuit Power Loss [W]		279.4	357.8	431.7	599.0
	Control Circuit Power Loss [W]		33	33	48	48
	External Regenerative Resistor Unit Power Loss [W]		180*2	180*3	350*3	350*3
	Total Power Loss [W]		312.4	390.8	479.7	647.0
External Regenerative Resistor Unit	External Regenerative Resistor Unit	Resistance [Ω]	6.25*2	3.13*3	3.13*3	3.13*3
		Capacity [W]	880*2	1760*3	1760*3	1760*3
	Minimum Allowable External Resistance [Ω]		5.8	2.9	2.9	2.9
Overvoltage Category			III			

*1. This is the net value at the rated load.

*2. This value is for the optional JUSP-RA04-E Regenerative Resistor Unit.

*3. This value is for the optional JUSP-RA05-E Regenerative Resistor Unit.

◆ Single-phase, 200 VAC

Model SGD7S-			R70A	R90A	1R6A	2R8A	5R5A
Maximum Applicable Motor Capacity [kW]			0.05	0.1	0.2	0.4	0.75
Continuous Output Current [Arms]			0.66	0.91	1.6	2.8	5.5
Instantaneous Maximum Output Current [Arms]			2.1	3.2	5.9	9.3	16.9
Main Circuit	Power Supply		200 VAC to 240 VAC, -15% to +10%, 50 Hz/60 Hz				
	Input Current [Arms]*		0.8	1.6	2.4	5.0	8.7
Control Power Supply			200 VAC to 240 VAC, -15% to +10%, 50 Hz/60 Hz				
Power Supply Capacity [kVA]*			0.2	0.3	0.6	1.2	1.9
Power Loss*	Main Circuit Power Loss [W]		5.1	7.3	13.5	24.0	43.8
	Control Circuit Power Loss [W]		17	17	17	17	17
	Built-in Regenerative Resistor Power Loss [W]		-	-	-	-	8
	Total Power Loss [W]		22.1	24.3	30.5	41.0	68.8
Regenerative Resistor	Built-In Regenerative Resistor	Resistance [Ω]	-	-	-	-	40
		Capacity [W]	-	-	-	-	40
	Minimum Allowable External Resistance [Ω]		40	40	40	40	40
Overvoltage Category			III				

* This is the net value at the rated load.

◆ 270 VDC

Model SGD7S-		R70A	R90A	1R6A	2R8A	3R8A	5R5A	7R6A	120A
Maximum Applicable Motor Capacity [kW]		0.05	0.1	0.2	0.4	0.5	0.75	1.0	1.5
Continuous Output Current [Arms]		0.66	0.91	1.6	2.8	3.8	5.5	7.6	11.6
Instantaneous Maximum Output Current [Arms]		2.1	3.2	5.9	9.3	11.0	16.9	17.0	28.0
Main Circuit	Power Supply	270 VDC to 324 VDC, -15% to +10%							
	Input Current [Arms]*	0.5	1.0	1.5	3.0	3.8	4.9	6.9	11
Control Power Supply		270 VDC to 324 VDC, -15% to +10%							
Power Supply Capacity [kVA]*		0.2	0.3	0.6	1	1.4	1.6	2.3	3.2
Power Loss*	Main Circuit Power Loss [W]	4.6	6.3	11.7	20.2	16.9	37.9	46.0	53.2
	Control Circuit Power Loss [W]	17	17	17	17	17	17	17	22
	Total Power Loss [W]	21.6	23.3	28.7	37.2	33.9	54.9	63.0	75.2
Overvoltage Category		III							

* This is the net value at the rated load.

Model SGD7S-		180A	200A	330A	470A	550A	590A	780A
Maximum Applicable Motor Capacity [kW]		2.0	3.0	5.0	6.0	7.5	11.0	15.0
Continuous Output Current [Arms]		18.5	19.6	32.9	46.9	54.7	58.6	78.0
Instantaneous Maximum Output Current [Arms]		42.0	56.0	84.0	110	130	140	170
Main Circuit	Power Supply	270 VDC to 324 VDC, -15% to +10%						
	Input Current [Arms]*	14	20	34	36	48	68	92
Control Power Supply		270 VDC to 324 VDC, -15% to +10%						
Power Supply Capacity [kVA]*		4.0	5.9	7.5	10.7	14.6	21.7	29.6
Power Loss*	Main Circuit Power Loss [W]	95.8	87.6	163.7	203.4	261.2	246.6	346.5
	Control Circuit Power Loss [W]	22	22	27	33	33	48	48
	Total Power Loss [W]	117.8	109.6	190.7	236.4	294.2	294.6	394.5
Overvoltage Category		III						

* This is the net value at the rated load.

SERVOPACK Overload Protection Characteristics

The overload detection level is set for hot start conditions with a SERVOPACK surrounding air temperature of 55°C.

An overload alarm (A.710 or A.720) will occur if overload operation that exceeds the overload protection characteristics shown in the following diagram (i.e., operation on the right side of the applicable line) is performed.

The actual overload detection level will be the detection level of the connected SERVOPACK or Servo Motor that has the lower overload protection characteristics.

In most cases, that will be the overload protection characteristics of the Servo Motor.

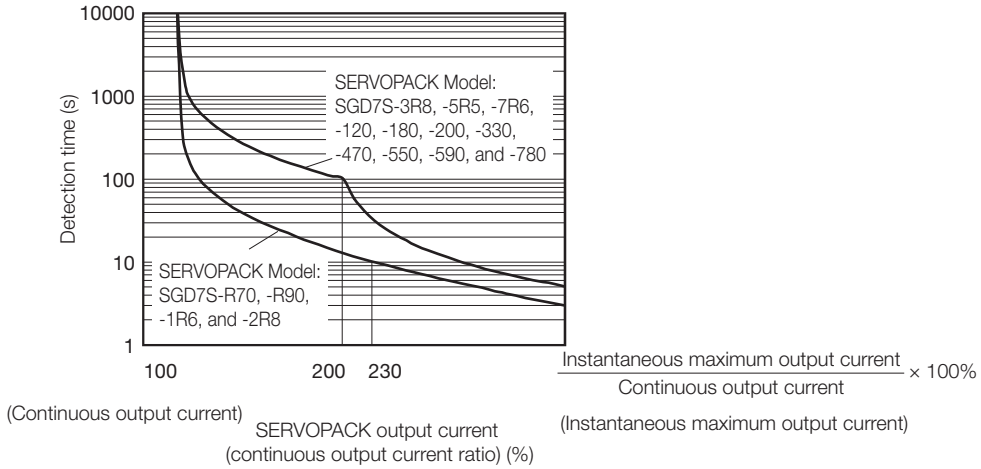

Note: The above overload protection characteristics do not mean that you can perform continuous duty operation with an output of 100% or higher.
For a Yaskawa-specified combination of SERVOPACK and Servo Motor, maintain the effective torque (or effective force) within the continuous duty zone of the torque-motor speed characteristic (or force-motor speed characteristics) of the Servo Motor.

Specifications

<table>
<tr><th colspan="2">Item</th><th>Specification</th></tr>
<tr><td colspan="2">Control Method</td><td>IGBT-based PWM control, sine wave current drive</td></tr>
<tr><td rowspan="2">Feedback</td><td>With Rotary Servo Motor</td><td>Serial encoder: 20 bits or 24 bits (incremental encoder/absolute encoder)</td></tr>
<tr><td>With Linear Servo Motor</td><td>• Absolute linear encoder (The signal resolution depends on the absolute linear encoder.)
• Incremental linear encoder (The signal resolution depends on the incremental linear encoder or Serial Converter Unit.)</td></tr>
<tr><td rowspan="8">Environmental Conditions</td><td>Surrounding Air Temperature*1</td><td>-5°C to 55°C
With derating, usage is possible between 55°C and 60°C.
Refer to the following section for derating specifications.
☞ Derating Specifications (page 407)</td></tr>
<tr><td>Storage Temperature</td><td>-20°C to 85°C</td></tr>
<tr><td>Surrounding Air Humidity</td><td>95% relative humidity max. (with no freezing or condensation)</td></tr>
<tr><td>Storage Humidity</td><td>95% relative humidity max. (with no freezing or condensation)</td></tr>
<tr><td>Vibration Resistance</td><td>4.9 m/s^2</td></tr>
<tr><td>Shock Resistance</td><td>19.6 m/s^2</td></tr>
<tr><td>Degree of Protection</td><td><table><tr><th>Class</th><th>SERVOPACK Model: SGD7S-</th></tr><tr><td>IP20</td><td>R70A, R90A, 1R6A, 2R8A, 3R8A, 5R5A, 7R6A, 120A</td></tr><tr><td>IP10</td><td>180A, 200A, 330A, 470A, 550A, 590A, 780A</td></tr></table></td></tr>
<tr><td>Pollution Degree</td><td>2
• Must be no corrosive or flammable gases.
• Must be no exposure to water, oil, or chemicals.
• Must be no dust, salts, or iron dust.</td></tr>
<tr><td>Altitude*1</td><td>1,000 m or less.
With derating, usage is possible between 1,000 m and 2,000 m.
Refer to the following section for derating specifications.
☞ Derating Specifications (page 407)</td></tr>
<tr><td>Others</td><td>Do not use the SERVOPACK in the following locations: Locations subject to static electricity noise, strong electromagnetic/magnetic fields, or radioactivity</td></tr>
<tr><td colspan="2">Applicable Standards</td><td>UL 61800-5-1, CSA C22.2 No.274, EN 50178, EN 61800-5-1, EN 55011 group 1 class A, EN 61000-6-2, EN 61000-6-4, EN 61800-3, IEC 61508-1 to 4, IEC 61800-5-2, IEC 62061, ISO 13849-1, and IEC 61326-3-1</td></tr>
<tr><td colspan="2">Mounting</td><td><table><tr><th>Mounting</th><th>SERVOPACK Model: SGD7S-</th></tr><tr><td>Base-mounted</td><td>All Models</td></tr><tr><td>Rack-mounted</td><td>R70A, R90A, 1R6A, 2R8A, 3R8A, 5R5A, 7R6A, 120A, 180A, 200A, 330A</td></tr><tr><td>Duct-ventilated</td><td>470A, 550A, 590A, 780A</td></tr></table></td></tr>
<tr><td rowspan="5">Performance</td><td>Speed Control Range</td><td>1:5000 (At the rated torque, the lower limit of the speed control range must not cause the Servo Motor to stop.)</td></tr>
<tr><td rowspan="3">Coefficient of Speed Fluctuation*2</td><td>±0.01% of rated speed max. (for a load fluctuation of 0% to 100%)</td></tr>
<tr><td>0% of rated speed max. (for a voltage fluctuation of ±10%)</td></tr>
<tr><td>±0.1% of rated speed max. (for a temperature fluctuation of 25°C ±25°C)</td></tr>
<tr><td>Torque Control Precision (Repeatability)</td><td>±1%</td></tr>
<tr><td>Soft Start Time Setting</td><td>0 s to 10 s (Can be set separately for acceleration and deceleration.)</td></tr>
</table>

Continued on next page.

Continued from previous page.

Item			Specification
I/O Signals	Encoder Divided Pulse Output		Phase A, phase B, phase C: Line-driver output Number of divided output pulses: Any setting is allowed.
	Linear Servo Motor Overheat Protection Signal Input		Number of input points: 1 Input voltage range: 0 V to +5 V
	Sequence Input Signals	Fixed Input	Allowable voltage range: 5 VDC ±5% Number of input points: 1 Absolute Data Request (SEN)
		Input Signals That Can Be Allocated	Allowable voltage range: 24 VDC ±20% Number of input points: 7
			Input method: Sink inputs or source inputs Input Signals: • Servo ON (/S-ON) • Proportional Control (/P-CON) • Forward Drive Prohibit (P-OT) and Reverse Drive Prohibit (N-OT) • Alarm Reset (/ALM-RST) • Forward External Torque Limit (/P-CL) and Reverse External Torque Limit (/N-CL) • Motor Direction (/SPD-D) • Internal Set Speed Selection (/SPD-A and /SPD-B) • Control Selection (/C-SEL) • Zero Clamping (/ZCLAMP) • Reference Pulse Inhibit (/INHIBIT) • Polarity Detection (/P-DET) • Gain Selection (/G-SEL) • Reference Pulse Input Multiplication Switch (/PSEL) • Absolute Data Request (SEN) A signal can be allocated and the positive and negative logic can be changed.
	Sequence Output Signals	Fixed Output	Allowable voltage range: 5 VDC to 30 VDC Number of output points: 1 Output signal: Servo Alarm (ALM)
		Output Signals That Can Be Allocated	Allowable voltage range: 5 VDC to 30 VDC Number of output points: 6 (A photocoupler output (isolated) is used for three of the outputs.) (An open-collector output (non-isolated) is used for the other three outputs.)
			Output Signals: • Positioning Completion (/COIN) • Speed Coincidence Detection (/V-CMP) • Rotation Detection (/TGON) • Servo Ready Output (/S-RDY) • Torque Limit Detection (/CLT) • Speed Limit Detection (/VLT) • Brake (/BK) • Warning Output (/WARN) • Near Output (/NEAR) • Reference Pulse Input Multiplication Switching (/PSELA) • Alarm Code (ALO1, ALO2, and ALO3) A signal can be allocated and the positive and negative logic can be changed.
Communications	RS-422A Communications (CN3)	Interfaces	Digital Operator (JUSP-OP05A-1-E) and personal computer (with SigmaWin+)
		1:N Communications	Up to N = 15 stations possible for RS-422A port
		Axis Address Setting	Set with parameters.
	USB Communications (CN7)	Interface	Personal computer (with SigmaWin+)
		Communications Standard	Conforms to USB2.0 standard (12 Mbps).
Displays/Indicators			CHARGE indicator and five-digit seven-segment display
Panel Operator			Four push switches

Continued from previous page.

Item					Specification
Analog Monitor (CN5)					Number of points: 2 Output voltage range: ±10 VDC (effective linearity range: ±8 V) Resolution: 16 bits Accuracy: ±20 mV (Typ) Maximum output current: ±10 mA Settling time (±1%): 1.2 ms (Typ)
Dynamic Brake (DB)					Activated when a servo alarm or overtravel (OT) occurs, or when the power supply to the main circuit or servo is OFF.
Regenerative Processing					Built-in (An external resistor must be connected to the SGD7S-470A to -780A.) ☞ *Built-In Regenerative Resistor* (page 539)
Overtravel (OT) Prevention					Stopping with dynamic brake, deceleration to a stop, or coasting to a stop for the P-OT (Forward Drive Prohibit) or N-OT (Reverse Drive Prohibit) signal
Protective Functions					Overcurrent, overvoltage, low voltage, overload, regeneration error, etc.
Utility Functions					Gain adjustment, alarm history, jogging, origin search, etc.
Safety Functions		Inputs			/HWBB1 and /HWBB2: Base block signals for Power Modules
		Output			EDM1: Monitors the status of built-in safety circuit (fixed output).
		Applicable Standards*3			ISO13849-1 PLe (Category 3) and IEC61508 SIL3
Option Module					Fully-Closed Modules and Safety Modules Note: You cannot use a Fully-Closed Module and a Safety Module together.
Controls	Speed Control	Soft Start Time Setting			0 s to 10 s (Can be set separately for acceleration and deceleration.)
		Input Signal		Reference Voltage	• Maximum input voltage: ±12 V (forward motor rotation for positive reference). • 6 VDC at rated speed (default setting). Input gain setting can be changed.
				Input Impedance	Approx. 14 kΩ
				Circuit Time Constant	30 μs
		Internal Set Speed Control		Rotation Direction Selection	With Proportional Control signal
				Speed Selection	With Forward/Reverse External Torque Limit signals (speed 1 to 3 selection). Servo Motor stops or another control method is used when both signals are OFF.
	Position Control	Feedforward Compensation			0% to 100%
		Output Signal Positioning Completed Width Setting			0 to 1,073,741,824 reference units
		Input Signals	Reference pulses	Reference Pulse Form	One of the following is selected: Sign + pulse train, CW + CCW pulse trains, and two-phase pulse trains with 90° phase differential
				Input Form	Line driver or open collector
				Maximum Input Frequency	• Line Driver Sign + pulse train or CW + CCW pulse trains: 4 Mpps Two-phase pulse trains with 90° phase differential: 1 Mpps • Open Collector Sign + pulse train or CW + CCW pulse trains: 200 kpps Two-phase pulse trains with 90° phase differential: 200 kpps
				Input Multiplication Switching	1 to 100 times
			Clear Signal		Position deviation clear Line driver or open collector

Continued from previous page.

Item				Specification
Controls	Torque Control	Input Signal	Reference Voltage	• Maximum input voltage: ±12 V (forward torque output for positive reference). • 3 VDC at rated torque (default setting). Input gain setting can be changed.
			Input Impedance	Approx. 14 kΩ
			Circuit Time Constant	16 μs

*1. If you combine a Σ-7-Series SERVOPACK with a Σ-V-Series Option Module, the following Σ-V-Series SERVOPACKs specifications must be used: a surrounding air temperature of 0°C to 55°C and an altitude of 1,000 m max. Also, the applicable range cannot be increased by derating.

*2. The coefficient of speed fluctuation for load fluctuation is defined as follows:

$$\text{Coefficient of speed fluctuation} = \frac{\text{No-load motor speed - Total-load motor speed}}{\text{Rated motor speed}} \times 100\%$$

*3. Always perform risk assessment for the system and confirm that the safety requirements are met.

Derating Specifications

If you use the SERVOPACK at a surrounding air temperature of 55°C to 60°C or at an altitude of 1,000 m to 2,000 m, you must apply the derating rates given in the following graphs.

◆ SGD7S-R70A, -R90A, -1R6A, and -2R8A

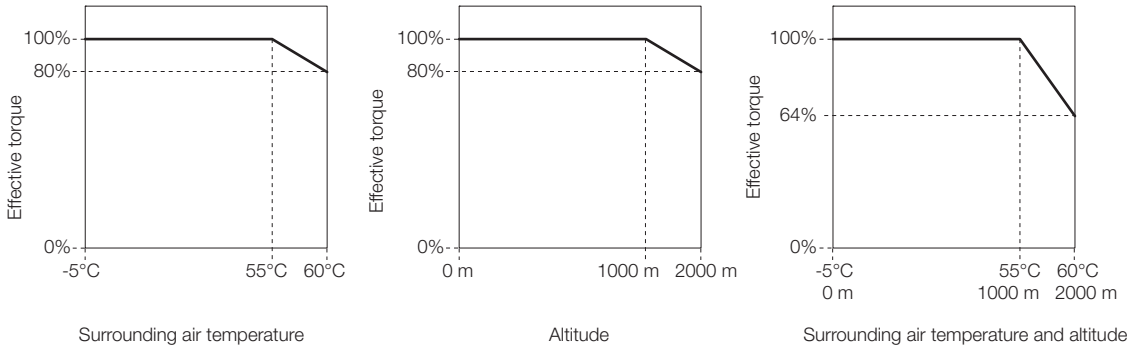

◆ SGD7S-3R8A, -5R5A, -7R6A, -120A, -180A, -200A, -330A, -470A, -550A, -590A, and -780A

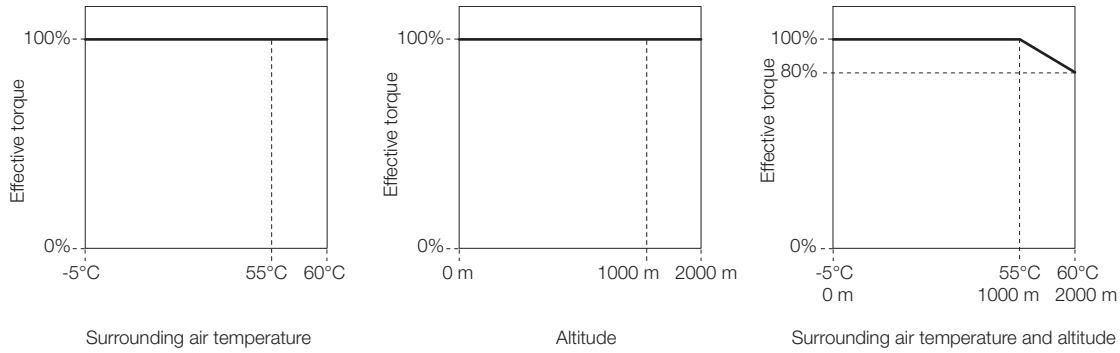

Model Designations

SGD7S - R70 A 30 A 000 F64

Σ-7 Series
Σ-7S SERVOPACKs

1st+2nd+3rd digits | 4th digit | 5th+6th digits | 7th digit | 8th+9th+10th digits | 11th+12th+13th digits

1st+2nd+3rd digits Maximum Applicable Motor Capacity

Voltage	Code	Specification
Three-phase, 200 VAC	R70*1	0.05 kW
	R90*1	0.1 kW
	1R6*1	0.2 kW
	2R8*1	0.4 kW
	3R8	0.5 kW
	5R5*1	0.75 kW
	7R6	1.0 kW
	120*3	1.5 kW
	180	2.0 kW
	200	3.0 kW
	330	5.0 kW
	470	6.0 kW
	550	7.5 kW
	590	11 kW
	780	15 kW
Single-phase, 100 VAC	R70	0.05 kW
	R90	0.1 kW
	2R1	0.2 kW
	2R8	0.4 kW

Voltage	Code	Specification
Three-phase, 400 VAC	1R9	0.5 kW
	3R5	1.0 kW
	5R4	1.5 kW
	8R4	2.0 kW
	120	3.0 kW
	170	5.0 kW
	210	6.0 kW
	260	7.5 kW
	280	11 kW
	370	15 kW

4th digit Voltage

Code	Specification
D	400 VAC
A	200 VAC
F	100 VAC

Shaded items are non-stock

*1. You can use these models with either a single-phase or three-phase power supply input.

*2. The same SERVOPACKs are used for both Rotary Servo Motors and Linear Servo Motors.

*3. A model with a single-phase, 200-VAC power supply input is available as a hardware option (model: SGD7S-120A30A008).

5th+6th digits Interface*2

Code	Specification
30	MECHATROLINK-III communications reference

7th digit Design Revision Order

Code	Specification
A	Global Design Revision for 200V
B	Global Design Revision for 400V

8th+9th+10th digits

Hardware Options (400V Models ONLY)

Code	Specification
000	Without options
026	With relay for holding brake

11th+12th+13th digits

FT/EX Spec (400V Models ONLY)

Code	Specification
000	Without options
F64	Zone Table

Note: F64 options is standard for 400V amps and not available for 200V amps.

Ratings and Specifications

Ratings

◆ Single-phase, 100 VAC

Model SGD7S-		R70F	R90F	2R1F	2R8F
Maximum Applicable Motor Capacity [kW]		0.05	0.1	0.2	0.4
Continuous Output Current [Arms]		0.66	0.91	2.1	2.8
Instantaneous Maximum Output Current [Arms]		2.1	3.2	6.5	9.3
Main Circuit	Power Supply	100 VAC to 120 VAC, -15% to +10%, 50/60 Hz			
	Input Current [Arms]*	1.5	2.5	5	10
Control Power Supply		100 VAC to 120 VAC, -15% to +10%, 50/60 Hz			
Power Supply Capacity [kVA]*		0.2	0.3	0.6	1.4
Power Loss*	Main Circuit Power Loss [W]	5.3	7.8	14.2	26.2
	Control Circuit Power Loss [W]	12	12	12	12
	Total Power Loss [W]	17.3	19.8	26.2	38.2
Regenerative Resistor	Minimum Allowable External Resistance [Ω]	40	40	40	40
Overvoltage Category		III			

* This is the net value at the rated load.

◆ Three-phase, 200 VAC

Model SGD7S-			R70A	R90A	1R6A	2R8A	3R8A	5R5A	7R6A	120A	180A	200A	**330A**
Maximum Applicable Motor Capacity [kW]			0.05	0.1	0.2	0.4	0.5	0.75	1.0	1.5	2.0	3.0	5.0
Continuous Output Current [Arms]			0.66	0.91	1.6	2.8	3.8	5.5	7.6	11.6	18.5	19.6	32.9
Instantaneous Maximum Output Current [Arms			2.1	3.2	5.9	9.3	11	16.9	17	28	42	56	84.0
Main Circuit	Power Supply		200 VAC to 240 VAC, -15%% to +10%, 50 Hz/60 Hz										
	Input Current [Arms]*		0.4	0.8	1.3	2.5	3.0	4.1	5.7	7.3	10	15	25
Control Power Supply			200 VAC to 240 VAC, -15%% to +10%, 50 Hz/60 Hz										
Power Supply Capacity [kVA]*			0.2	0.3	0.5	1.0	1.3	1.6	2.3	3.2	4.0	5.9	7.5
Power Loss*	Main Circuit Power Loss [W]		5.1	7.3	13.5	24.0	20.1	43.8	53.6	65.8	111.9	113.8	263.7
	Control Circuit Power Loss [W]		17	17	17	17	17	17	17	22	22	22	27
	Built-in Regenerative Resistor Power Loss [W]		–	–	–	–	8	8	8	10	16	16	36.0
	Total Power Loss [W]		22.1	24.3	30.5	41.0	45.1	68.8	78.6	97.8	149.9	151.8	326.7
Regenerative Resistor	Built-In Regenerative Resistor	Resistance [Ω]	–	–	–	–	40	40	40	20	12	12	8
		Capacity [W]	–	–	–	–	40	40	40	60	60	60	180
	Minimum Allowable External Resistance [Ω]		40	40	40	40	40	40	40	20	12	12	8
Overvoltage Category			III										

* This is the net value at the rated load.

Model SGD7S-			470A	550A	590A	780A
Maximum Applicable Motor Capacity [kW]			6.0	7.5	11	15
Continuous Output Current [Arms]			46.9	54.7	58.6	78.0
Instantaneous Maximum Output Current [Arms]			110	130	140	170
Main Circuit	Power Supply		200 VAC to 240 VAC, -15%% to +10%, 50 Hz/60 Hz			
	Input Current [Arms]*1		29	37	54	73
Control Power Supply			200 VAC to 240 VAC, -15%% to +10%, 50 Hz/60 Hz			
Power Supply Capacity [kVA]*1			10.7	14.6	21.7	29.6
Power Loss*1	Main Circuit Power Loss [W]		279.4	357.8	431.7	599.0
	Control Circuit Power Loss [W]		33	33	48	48
	External Regenerative Resistor Unit Power Loss [W]		180*2	180*3	350*3	350*3
	Total Power Loss [W]		312.4	390.8	479.7	647.0
External Regenerative Resistor Unit	External Regenerative Resistor Unit	Resistance [Ω]	6.25*2	3.13*3	3.13*3	3.13*3
		Capacity [W]	880*2	1760*3	1760*3	1760*3
	Minimum Allowable External Resistance [Ω]		5.8	2.9	2.9	2.9
Overvoltage Category			III			

*1. This is the net value at the rated load.

*2. This value is for the optional JUSP-RA04-E Regenerative Resistor Unit.

*3. This value is for the optional JUSP-RA05-E Regenerative Resistor Unit.

◆ Single-phase, 200 VAC

Model SGD7S-			R70A	R90A	1R6A	2R8A	5R5A
Maximum Applicable Motor Capacity [kW]			0.05	0.1	0.2	0.4	0.75
Continuous Output Current [Arms]			0.66	0.91	1.6	2.8	5.5
Instantaneous Maximum Output Current [Arms]			2.1	3.2	5.9	9.3	16.9
Main Circuit	Power Supply		200 VAC to 240 VAC, -15% to +10%, 50 Hz/60 Hz				
	Input Current [Arms]*		0.8	1.6	2.4	5.0	8.7
Control Power Supply			200 VAC to 240 VAC, -15% to +10%, 50 Hz/60 Hz				
Power Supply Capacity [kVA]*			0.2	0.3	0.6	1.2	1.9
Power Loss*	Main Circuit Power Loss [W]		5.1	7.3	13.5	24.0	43.8
	Control Circuit Power Loss [W]		17	17	17	17	17
	Built-in Regenerative Resistor Power Loss [W]		–	–	–	–	8
	Total Power Loss [W]		22.1	24.3	30.5	41.0	68.8
Regenerative Resistor	Built-In Regenerative Resistor	Resistance [Ω]	–	–	–	–	40
		Capacity [W]	–	–	–	–	40
	Minimum Allowable External Resistance [Ω]		40	40	40	40	40
Overvoltage Category			III				

* This is the net value at the rated load.

◆ 270 VDC

Model SGD7S-		R70A	R90A	1R6A	2R8A	3R8A	5R5A	7R6A	120A
Maximum Applicable Motor Capacity [kW]		0.05	0.1	0.2	0.4	0.5	0.75	1.0	1.5
Continuous Output Current [Arms]		0.66	0.91	1.6	2.8	3.8	5.5	7.6	11.6
Instantaneous Maximum Output Current [Arms]		2.1	3.2	5.9	9.3	11.0	16.9	17.0	28.0
Main Circuit	Power Supply	270 VDC to 324 VDC, -15% to +10%							
	Input Current [Arms]*	0.5	1.0	1.5	3.0	3.8	4.9	6.9	11
Control Power Supply		270 VDC to 324 VDC, -15% to +10%							
Power Supply Capacity [kVA]*		0.2	0.3	0.6	1	1.4	1.6	2.3	3.2
Power Loss*	Main Circuit Power Loss [W]	4.6	6.3	11.7	20.2	16.9	37.9	46.0	53.2
	Control Circuit Power Loss [W]	17	17	17	17	17	17	17	22
	Total Power Loss [W]	21.6	23.3	28.7	37.2	33.9	54.9	63.0	75.2
Overvoltage Category		III							

* This is the net value at the rated load.

Model SGD7S-		180A	200A	330A	470A	550A	590A	780A
Maximum Applicable Motor Capacity [kW]		2.0	3.0	5.0	6.0	7.5	11.0	15.0
Continuous Output Current [Arms]		18.5	19.6	32.9	46.9	54.7	58.6	78.0
Instantaneous Maximum Output Current [Arms]		42.0	56.0	84.0	110	130	140	170
Main Circuit	Power Supply	270 VDC to 324 VDC, -15% to +10%						
	Input Current [Arms]*	14	20	34	36	48	68	92
Control Power Supply		270 VDC to 324 VDC, -15% to +10%						
Power Supply Capacity [kVA]*		4.0	5.9	7.5	10.7	14.6	21.7	29.6
Power Loss*	Main Circuit Power Loss [W]	95.8	87.6	163.7	203.4	261.2	246.6	346.5
	Control Circuit Power Loss [W]	22	22	27	33	33	48	48
	Total Power Loss [W]	117.8	109.6	190.7	236.4	294.2	294.6	394.5
Overvoltage Category		III						

* This is the net value at the rated load.

◆ Three-phase, 400 VAC

Model SGD7S-			1R9D	3R5D	5R4D	8R4D	120D	170D	210D	260D	280D	370D
Maximum Applicable Motor Capacity [kW]			0.5	1	1.5	2	3	5	6	7.5	11	15
Continuous Output Current [Arms]			1.9	3.5	5.4	8.4	11.9	16	20.8	25.7	28.1	37.2
Instantaneous Maximum Output Current [Arms			5.5	8.5	14	21	28	42	55	65	70	85
Main Circuit	Power Supply		Three-phase, 380 VAC to 480 VAC, -15%% to +10%, 50 Hz/60 Hz									
	Input Current [Arms]*		1.4	2.9	4.3	5.8	8.6	14.5	17.4	21.7	31.8	43.4
Control Power Supply	Power Supply		24 VDC ±15%									
	Input Current [Arms]*		1.2						1.4		1.5	
Power Supply Capacity [kVA]*			1.1	2.3	3.5	4.5	7.1	11.7	12.4	14.4	21.9	30.6
Power Loss*	Main Circuit Power Loss [W]		19.2	30	62.3	89.4	136.8	188.7	188.4	228.5	278.2	389.8
	Control Circuit Power Loss [W]		21					22	28		32	
	Built-in Regenerative Resistor Power Loss [W]		14	14	28	28	28	36	(180)		(240)	
	Total Power Loss [W]		54.2	65	111.3	138.4	185.5	246.7	216.4	256.5	310.2	389.8
Regenerative Resistor	Built-In Regenerative Resistor	Resistance [Ω]	75	75	75	43	43	27	-			
		Capacity [W]	70	70	140	140	140	180	-			
	Minimum Allowable External Resistance [Ω]		75	75	75	43	43	27	18		14.25	
Overvoltage Category			III									

* This is the net value at the rated load.

◆ 540 VDC

Model SGD7S-		1R9D	3R5D	5R4D	8R4D	120D	170D	210D	260D	280D	370D
Maximum Applicable Motor Capacity [kW]		0.5	1	1.5	2	3	5	6	7.5	11	15
Continuous Output Current [Arms]		1.9	3.5	5.4	8.4	11.9	16	20.8	25.7	28.1	37.2
Instantaneous Maximum Output Current [Arms		5.5	8.5	14	21	28	42	55	65	70	85
Main Circuit	Power Supply	513 VDC to 648 VDC, -15%, +10%									
	Input Current [Arms]*	2	3.3	5.5	6.8	11	18	19.6	26.2	38.3	47.6
Control Power Supply	Power Supply	24 VDC ±15%									
	Input Current [Arms]*	1.2						1.4		1.5	
Power Supply Capacity [kVA]*		1.1	2.3	3.5	4.5	7.1	11.7	12.4	14.4	21.9	30.6
Power Loss*	Main Circuit Power Loss [W]	19.2	30	62.3	89.4	136.8	188.7	188.4	228.5	278.2	389.8
	Control Circuit Power Loss [W]	21					22	28		32	
	Built-in Regenerative Resistor Power Loss [W]	14	14	28	28	28	36	(180)		(240)	
	Total Power Loss [W]	37.4	45.4	69.5	94.7	131.4	166.5	216.4	228.5	310.2	389.8
Overvoltage Category		III									

* This is the net value at the rated load.

SERVOPACK Overload Protection Characteristics (200V)

The overload detection level is set for hot start conditions with a SERVOPACK surrounding air temperature of 55°C.

An overload alarm (A.710 or A.720) will occur if overload operation that exceeds the overload protection characteristics shown in the following diagram (i.e., operation on the right side of the applicable line) is performed.

The actual overload detection level will be the detection level of the connected SERVOPACK or Servo Motor that has the lower overload protection characteristics.

In most cases, that will be the overload protection characteristics of the Servo Motor.

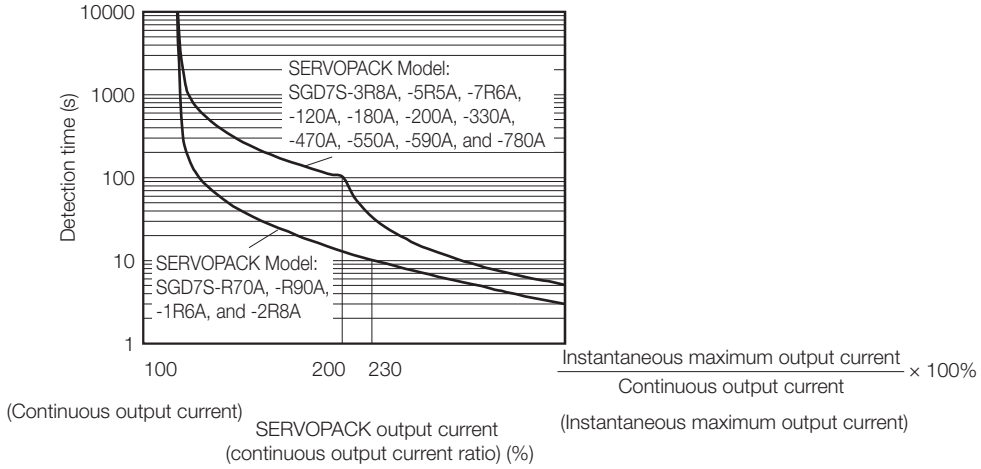

Note: The above overload protection characteristics do not mean that you can perform continuous duty operation with an output of 100% or higher.
For a Yaskawa-specified combination of SERVOPACK and Servo Motor, maintain the effective torque (or effective force) within the continuous duty zone of the torque-motor speed characteristic (or force-motor speed characteristics) of the Servo Motor.

SERVOPACK Overload Protection Characteristics (400V)

The overload detection level is set for hot start conditions with a SERVOPACK surrounding air temperature of 55°C*.

An overload alarm (A.710 or A.720) will occur if overload operation that exceeds the overload protection characteristics shown in the following diagram (i.e., operation on the right side of the applicable line) is The actual overload detection level will be the detection level of the connected SERVOPACK or Servomotor that has the lower overload protection characteristics.

In most cases, that will be the overload protection characteristics of the Servomotor.

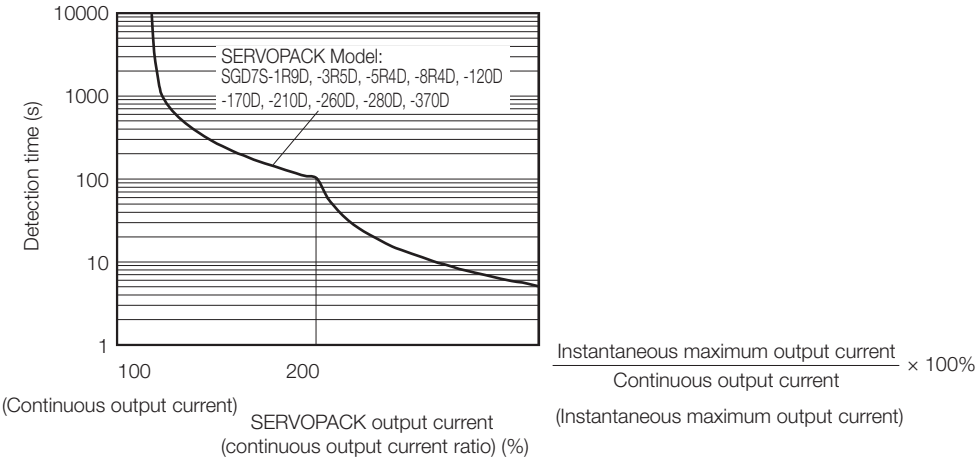

Note: The above overload protection characteristics do not mean that you can perform continuous duty operation with an output of 100% or higher.
For a YASKAWA-specified combination of SERVOPACK and Servomotor, maintain the effective torque within the continuous duty zone of the torque-motor speed characteristic of the Servomotor.
* However, the range for the SGD7S-370D is -5°C to 40°C.

Specifications (200 V Models)

<table>
<tr><th colspan="2">Item</th><th>Specification</th></tr>
<tr><td colspan="2">Drive Method</td><td>IGBT-based PWM control, sine wave current drive</td></tr>
<tr><td rowspan="2">Feedback</td><td>With Rotary Servo Motor</td><td>Serial encoder: 20 bits or 24 bits (incremental encoder/absolute encoder)</td></tr>
<tr><td>With Linear Servo Motor</td><td>• Absolute linear encoder (The signal resolution depends on the absolute linear encoder.)
• Incremental linear encoder (The signal resolution depends on the incremental linear encoder or Serial Converter Unit.)</td></tr>
<tr><td rowspan="8">Environmental Conditions</td><td>Surrounding Air Temperature*1</td><td>-5°C to 55°C
With derating, usage is possible between 55°C and 60°C.
Refer to the following section for derating specifications.
☞ Specifications (400 V Models) (page 418)</td></tr>
<tr><td>Storage Temperature</td><td>-20°C to 85°C</td></tr>
<tr><td>Surrounding Air Humidity</td><td>95% relative humidity max. (with no freezing or condensation)</td></tr>
<tr><td>Storage Humidity</td><td>95% relative humidity max. (with no freezing or condensation)</td></tr>
<tr><td>Vibration Resistance</td><td>4.9 m/s^2</td></tr>
<tr><td>Shock Resistance</td><td>19.6 m/s^2</td></tr>
<tr><td>Degree of Protection</td><td><table><tr><th>Class</th><th>SERVOPACK Model: SGD7S-</th></tr><tr><td>IP20</td><td>R70A, R90A, 1R6A, 2R8A, 3R8A, 5R5A, 7R6A, 120A</td></tr><tr><td>IP10</td><td>180A, 200A, 330A, 470A, 550A, 590A, 780A</td></tr></table></td></tr>
<tr><td>Pollution Degree</td><td>2
• Must be no corrosive or flammable gases.
• Must be no exposure to water, oil, or chemicals.
• Must be no dust, salts, or iron dust.</td></tr>
<tr><td>Altitude*1</td><td>1,000 m or less.
With derating, usage is possible between 1,000 m and 2,000 m.
Refer to the following section for derating specifications.
☞ Specifications (400 V Models) (page 418)</td></tr>
<tr><td>Others</td><td>Do not use the SERVOPACK in the following locations: Locations subject to static electricity noise, strong electromagnetic/magnetic fields, or radioactivity</td></tr>
<tr><td colspan="2">Applicable Standards</td><td>UL 61800-5-1, CSA C22.2 No.274, EN 50178, EN 61800-5-1, EN 55011 group 1 class A, EN 61000-6-2, EN 61000-6-4, EN 61800-3, IEC 61508-1 to 4, IEC 61800-5-2, IEC 62061, ISO 13849-1, and IEC 61326-3-1</td></tr>
<tr><td colspan="2">Mounting</td><td><table><tr><th>Mounting</th><th>SERVOPACK Model: SGD7S-</th></tr><tr><td>Base-mounted</td><td>All Models</td></tr><tr><td>Rack-mounted</td><td>R70A, R90A, 1R6A, 2R8A, 3R8A, 5R5A, 7R6A, 120A, 180A, 200A, 330A</td></tr><tr><td>Duct-ventilated</td><td>470A, 550A, 590A, 780A</td></tr></table></td></tr>
<tr><td rowspan="5">Performance</td><td>Speed Control Range</td><td>1:5000 (At the rated torque, the lower limit of the speed control range must not cause the Servo Motor to stop.)</td></tr>
<tr><td rowspan="3">Coefficient of Speed Fluctuation*2</td><td>±0.01% of rated speed max. (for a load fluctuation of 0% to 100%)</td></tr>
<tr><td>0% of rated speed max. (for a voltage fluctuation of ±10%)</td></tr>
<tr><td>±0.1% of rated speed max. (for a temperature fluctuation of 25°C ±25°C)</td></tr>
<tr><td>Torque Control Precision (Repeatability)</td><td>±1%</td></tr>
<tr><td>Soft Start Time Setting</td><td>0 s to 10 s (Can be set separately for acceleration and deceleration.)</td></tr>
</table>

Continued from previous page.

Item			Specification
I/O Signals	Encoder Divided Pulse Output		Phase A, phase B, phase C: Line-driver output Number of divided output pulses: Any setting is allowed.
	Linear Servo Motor Overheat Protection Signal Input		Number of input points: 1 Input voltage range: 0 V to +5 V
	Sequence Input Signals	Input Signals That Can Be Allocated	Allowable voltage range: 24 VDC ±20% Number of input points: 7
			Input method: Sink inputs or source inputs Input Signals: • Origin Return Deceleration Switch (/DEC) • External Latch 1 to 3 (/EXT 1 to 3) • Forward Drive Prohibit (P-OT) and Reverse Drive Prohibit (N-OT) • Forward External Torque Limit (/P-CL) and Reverse External Torque Limit (/N-CL) • Polarity Detection (/P-DET) A signal can be allocated and the positive and negative logic can be changed.
	Sequence Output Signals	Fixed Output	Allowable voltage range: 5 VDC to 30 VDC Number of output points: 1 Output signal: Servo Alarm (ALM)
		Output Signals That Can Be Allocated	Allowable voltage range: 5 VDC to 30 VDC Number of output points: 3 (A photocoupler output (isolated) is used.)
			Output Signals: • Positioning Completion (/COIN) • Speed Coincidence Detection (/V-CMP) • Rotation Detection (/TGON) • Servo Ready Output (/S-RDY) • Torque Limit Detection (/CLT) • Speed Limit Detection (/VLT) • Brake (/BK) • Warning Output (/WARN) • Near Output (/NEAR) A signal can be allocated and the positive and negative logic can be changed.
Communications	RS-422A Communications (CN3)	Interfaces	Digital Operator (JUSP-OP05A-1-E) and personal computer (with SigmaWin+)
		1:N Communications	Up to N = 15 stations possible for RS-422A port
		Axis Address Setting	Set with parameters.
	USB Communications (CN7)	Interface	Personal computer (with SigmaWin+)
		Communications Standard	Conforms to USB2.0 standard (12 Mbps).
Displays/Indicators			CHARGE, PWR, COM, L1, and L2 indicators, and one-digit seven-segment display
MECHATROLINK-III Communications	Communications Protocol		MECHATROLINK-III
	Station Address Settings		03 to EF hex (maximum number of slaves: 62) The rotary switches (S1 and S2) are used to set the station address.
	Baud Rate		100 Mbps
	Transmission Cycle		125 μs, 250 μs, 500 μs, 750 μs, 1.0 ms to 4.0 ms (multiples of 0.5 ms)
	Number of Transmission Bytes		32 or 48 bytes/station A DIP switch (S3) is used to select the number of transmission bytes.
Reference Method	Performance		Position, speed, or torque control with MECHATROLINK-III communications
	Reference Input		MECHATROLINK-III commands (sequence, motion, data setting, data access, monitoring, adjustment, etc.)
	Profile		MECHATROLINK-III standard servo profile
MECHATROLINK-III Communications Setting Switches			Rotary switch (S1 and S2) positions: 16
			Number of DIP switch (S3) pins: 4

Continued from previous page.

Item		Specification
Analog Monitor (CN5)		Number of points: 2 Output voltage range: ±10 VDC (effective linearity range: ±8 V) Resolution: 16 bits Accuracy: ±20 mV (Typ) Maximum output current: ±10 mA Settling time (±1%): 1.2 ms (Typ)
Dynamic Brake (DB)		Activated when a servo alarm or overtravel (OT) occurs, or when the power supply to the main circuit or servo is OFF.
Regenerative Processing		Built-in (An external resistor must be connected to the SGD7S-470A to -780A.) ☞ *Built-In Regenerative Resistor* **(page 539)**
Overtravel (OT) Prevention		Stopping with dynamic brake, deceleration to a stop, or coasting to a stop for the P-OT (Forward Drive Prohibit) or N-OT (Reverse Drive Prohibit) signal
Protective Functions		Overcurrent, overvoltage, low voltage, overload, regeneration error, etc.
Utility Functions		Gain adjustment, alarm history, jogging, origin search, etc.
Safety Functions	Inputs	/HWBB1 and /HWBB2: Base block signals for Power Modules
	Output	EDM1: Monitors the status of built-in safety circuit (fixed output).
	Applicable Standards*3	ISO13849-1 PLe (Category 3), IEC61508 SIL3
Option Module		Fully-Closed Modules and Safety Modules Note: You cannot use a Fully-Closed Module and a Safety Module together.

*1. If you combine a Σ-7-Series SERVOPACK with a Σ-V-Series Option Module, the following Σ-V-Series SERVOPACKs specifications must be used: a surrounding air temperature of 0°C to 55°C and an altitude of 1,000 m max. Also, the applicable range cannot be increased by derating.

*2. The coefficient of speed fluctuation for load fluctuation is defined as follows:

$$\text{Coefficient of speed fluctuation} = \frac{\text{No-load motor speed - Total-load motor speed}}{\text{Rated motor speed}} \times 100\%$$

*3. Always perform risk assessment for the system and confirm that the safety requirements are met.

Specifications (400 V Models)

Item		Specification
Drive Method		IGBT-based PWM control, sine wave current drive
Feedback	With Rotary Servo Motor	Serial encoder: 24 bits (incremental encoder/absolute encoder)
	With Linear Servo Motor	• Absolute linear encoder (The signal resolution depends on the absolute linear encoder.) • Incremental linear encoder (The signal resolution depends on the incremental linear encoder or Serial Converter Unit.)
Environmental Conditions	Surrounding Air Temperature*1	-5°C to 55°C (60°C with derating) However the range for the SGD7S-370D is -5°C to 40°C Refer to the following section for derating specifications. ☞ *Specifications (400 V Models)* **(page 418)**
	Storage Temperature	-20°C to 85°C
	Surrounding Air Humidity	95% relative humidity max. (with no freezing or condensation)
	Storage Humidity	95% relative humidity max. (with no freezing or condensation)
	Vibration Resistance	4.9 m/s^2
	Shock Resistance	19.6 m/s^2
	Degree of Protection	IP10
	Pollution Degree	2 • Must be no corrosive or flammable gases. • Must be no exposure to water, oil, or chemicals. • Must be no dust, salts, or iron dust.
	Altitude*1	1,000 m or less. With derating, usage is possible between 1,000 m and 2,000 m. Refer to the following section for derating specifications. ☞ *Specifications (400 V Models)* **(page 418)**
	Others	Do not use the SERVOPACK in the following locations: Locations subject to static electricity noise, strong electromagnetic/magnetic fields, or radioactivity
Applicable Standards		UL 61800-5-1, CSA C22.2 No.274, EN 50178, EN 61800-5-1, EN 55011 group 1 class A, EN 61000-6-2, EN 61000-6-4, EN 61800-3, IEC 61508-1 to 4, IEC 61800-5-2, IEC 62061, ISO 13849-1, and IEC 61326-3-1
Mounting		Base-mounted
Performance	Speed Control Range	1:5000 (At the rated torque, the lower limit of the speed control range must not cause the Servo Motor to stop.)
	Coefficient of Speed Fluctuation*2	±0.01% of rated speed max. (for a load fluctuation of 0% to 100%)
		0% of rated speed max. (for a voltage fluctuation of ±10%)
		±0.1% of rated speed max. (for a temperature fluctuation of 25°C ±25°C)
	Torque Control Precision (Repeatability)	±1%
	Soft Start Time Setting	0 s to 10 s (Can be set separately for acceleration and deceleration.)

Continued from previous page.

Item			Specification
I/O Signals	Encoder Divided Pulse Output		Phase A, phase B, phase C: Line-driver output Number of divided output pulses: Any setting is allowed.
	Linear Servo Motor Overheat Protection Signal Input		Number of input points: 1 Input voltage range: 0 V to +5 V
	Sequence Input Signals	Input Signals That Can Be Allocated	Allowable voltage range: 24 VDC ±20% Number of input points: 7
			Input method: Sink inputs or source inputs Input Signals: • P-OT (Forward Drive Prohibit) and N-OT (Reverse Drive Prohibit) signals • /Probe1 (Probe 1 Latch Input) signal • /Probe2 (Probe 2 Latch Input) signal • /Home (Home Switch Input) signal • /P-CL (Forward External Torque Limit) and /N-CL (Reverse External Torque Limit) signals • /SI0 and /SI3 (General-Purpose Input) signals A signal can be allocated and the positive and negative logic can be changed.
	Sequence Output Signals	Fixed Output	Allowable voltage range: 5 VDC to 30 VDC Number of output points: 1 Output signal: Servo Alarm (ALM)
		Output Signals That Can Be Allocated	Allowable voltage range: 5 VDC to 30 VDC Number of output points: 5 (A photocoupler output (isolated) is used.)
			Output Signals: • /COIN (Positioning Completion) signal • /V-CMP (Speed Coincidence Detection) signal • /TGON (Rotation Detection) signal • /S-RDY (Servo Ready) signal • /CLT (Torque Limit Detection) signal • /VLT (Speed Limit Detection) signal • /BK (Brake) signal • /WARN (Warning) signal • /NEAR (Near) signal • /ZONE0 (ZONE Signal 1 Output) signal • /ZONE1 (ZONE Signal 2 Output) signal • /ZONE2 (ZONE Signal 3 Output) signal • /ZONE3 (ZONE Signal 4 Output) signal • /nZONE (nZONE output) signal A signal can be allocated and the positive and negative logic can be changed.
Communications	RS-422A Communications (CN3)	Interfaces	Digital Operator (JUSP-OP05A-1-E)
		1:N Communications	Up to N = 15 stations possible for RS-422A port
		Axis Address Setting	Set with parameters.
	USB Communications (CN7)	Interface	Personal Computer (with SigmaWin+) The software version of the SigmaWin+ must be version 7.11 or higher.
		Communications Standard	Conforms to USB2.0 standard (12 Mbps).
Displays/Indicators			CHARGE, PWR, COM, L1, and L2 indicators, and one-digit seven-segment display
MECHATROLINK-III Communications	Communications Protocol		MECHATROLINK-III
	Station Address Settings		03 to EF hex (maximum number of slaves: 62) The rotary switches (S1 and S2) are used to set the station address.
	Baud Rate		100 Mbps
	Transmission Cycle		125 μs, 250 μs, 500 μs, 750 μs, 1.0 ms to 4.0 ms (multiples of 0.5 ms)
	Number of Transmission Bytes		32 or 48 bytes/station A DIP switch (S3) is used to select the number of transmission bytes.

Continued from previous page.

Item		Specification
Reference Method	Performance	Position, speed, or torque control with MECHATROLINK-III communications
	Reference Input	MECHATROLINK-III commands (sequence, motion, data setting, data access, monitoring, adjustment, etc.)
	Profile	MECHATROLINK-III standard servo profile
MECHATROLINK-III Communications Setting Switches		Rotary switch (S1 and S2) positions: 16
		Number of DIP switch (S3) pins: 4
Analog Monitor (CN5)		Number of points: 2 Output voltage range: ±10 VDC (effective linearity range: ±8 V) Resolution: 16 bits Accuracy: ±20 mV (Typ) Maximum output current: ±10 mA Settling time (±1%): 1.2 ms (Typ)
Dynamic Brake (DB)		Activated when a servo alarm or overtravel (OT) occurs, or when the power supply to the main circuit or servo is OFF.
Regenerative Processing		Built-in (An external resistor must be connected to the SGD7S-470A to -780A.) ☞ *Built-In Regenerative Resistor* **(page 539)**
Overtravel (OT) Prevention		Stopping with dynamic brake, deceleration to a stop, or coasting to a stop for the P-OT (Forward Drive Prohibit) or N-OT (Reverse Drive Prohibit) signal
Protective Functions		Overcurrent, overvoltage, low voltage, overload, regeneration error, etc.
Utility Functions		Gain adjustment, alarm history, jogging, origin search, etc.
Safety Functions	Inputs	/HWBB1 and /HWBB2: Base block signals for Power Modules
	Output	EDM1: Monitors the status of built-in safety circuit (fixed output).
	Applicable Standards*3	ISO13849-1 PLe (Category 3), IEC61508 SIL3
Option Module		Fully-Closed Modules

*1. If you combine a Σ-7-Series SERVOPACK with a Σ-V-Series Option Module, the surrounding air temperature of 0°C to 55°C and an altitude of 1,000 m max. must be used. Also, the applicable range cannot be increased by derating.

*2. The coefficient of speed fluctuation for load fluctuation is defined as follows:

$$\text{Coefficient of speed fluctuation} = \frac{\text{No-load motor speed - Total-load motor speed}}{\text{Rated motor speed}} \times 100\%$$

*3. Always perform risk assessment for the system and confirm that the safety requirements are met.

Derating Specifications

If you use the SERVOPACK at a surrounding air temperature of 55°C to 60°C or at an altitude of 1,000 m to 2,000 m, you must apply the derating rates given in the following graphs.

◆ SGD7S-R70A, -R90A, -1R6A, and -2R8A

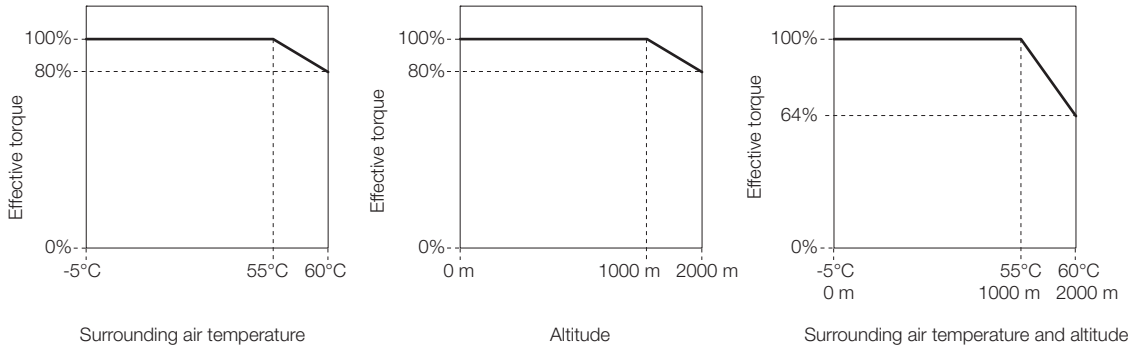

◆ SGD7S-3R8A, -5R5A, -7R6A, -120A, -180A, -200A, -330A, -470A, -550A, -590A, and -780A

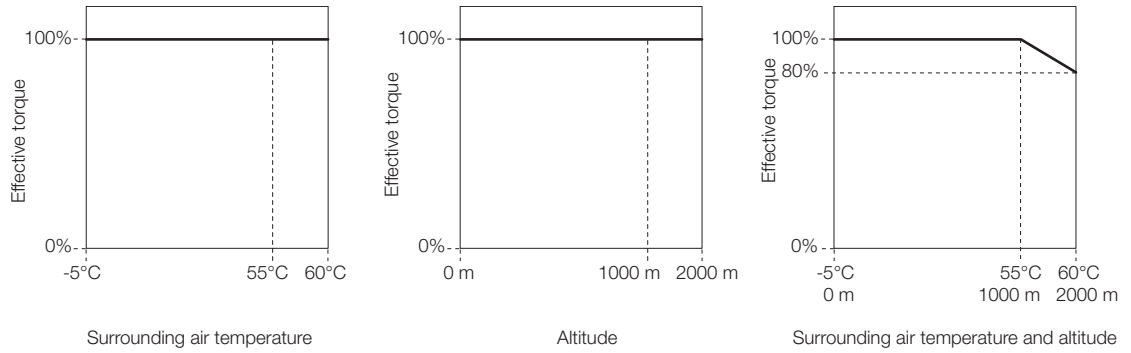

Model Designations

SGD7S - R70 A A0 A 000 F64

Σ-7 Series Σ-7S SERVOPACKs | 1st+2nd+3rd digits | 4th digit | 5th+6th digits | 7th digit | 8th+9th+10th digits | 11th+12th+13th digits

1st+2nd+3rd digits Maximum Applicable Motor Capacity

Voltage	Code	Specification
Three-phase, 200 VAC	R70*1	0.05 kW
	R90*1	0.1 kW
	1R6*1	0.2 kW
	2R8*1	0.4 kW
	3R8	0.5 kW
	5R5*1	0.75 kW
	7R6	1.0 kW
	120*3	1.5 kW
	180	2.0 kW
	200	3.0 kW
	330	5.0 kW
	470	6.0 kW
	550	7.5 kW
	590	11 kW
	780	15 kW
Single-phase, 100 VAC	R70	0.05 kW
	R90	0.1 kW
	2R1	0.2 kW
	2R8	0.4 kW

Voltage	Code	Specification
Three-phase, 400 VAC	1R9	0.5 kW
	3R5	1.0 kW
	5R4	1.5 kW
	8R4	2.0 kW
	120	3.0 kW
	170	5.0 kW
	210	6.0 kW
	260	7.5 kW
	280	11 kW
	370	15 kW

4th digit Voltage

Code	Specification
D	400 VAC
A	200 VAC
F	100 VAC

Shaded items are non-stock

5th+6th digits Interface*2

Code	Specification
A0	EtherCAT communications reference

7th digit Design Revision Order

Code	Specification
A	Global Design Revision for 200V
B	Global Design Revision for 400V

8th+9th+10th digits

Hardware Options (400V Models ONLY)

Code	Specification
000	Without options
026	With relay for holding brake

11th+12th+13th digits

FT/EX Spec (400V Models ONLY)

Code	Specification
000	Without options
F64	Zone Table

Note: F64 options is standard for 400V amps and not available for 200V amps.

*1. You can use these models with either a single-phase or three-phase power supply input.

*2. The same SERVOPACKs are used for both Rotary Servo Motors and Linear Servo Motors.

*3. A model with a single-phase, 200-VAC power supply input is available as a hardware option (model: SGD7S-120A30A008).

Ratings and Specifications

Ratings

◆ Single-phase, 100 VAC

Model SGD7S-		R70F	R90F	2R1F	2R8F
Maximum Applicable Motor Capacity [kW]		0.05	0.1	0.2	0.4
Continuous Output Current [Arms]		0.66	0.91	2.1	2.8
Instantaneous Maximum Output Current [Arms]		2.1	3.2	6.5	9.3
Main Circuit	Power Supply	100 VAC to 120 VAC, -15% to +10%, 50/60 Hz			
	Input Current [Arms]*	1.5	2.5	5	10
Control Power Supply		100 VAC to 120 VAC, -15% to +10%, 50/60 Hz			
Power Supply Capacity [kVA]*		0.2	0.3	0.6	1.4
Power Loss*	Main Circuit Power Loss [W]	5.3	7.8	14.2	26.2
	Control Circuit Power Loss [W]	12	12	12	12
	Total Power Loss [W]	17.3	19.8	26.2	38.2
Regenerative Resistor	Minimum Allowable External Resistance [Ω]	40	40	40	40
Overvoltage Category		III			

* This is the net value at the rated load.

◆ Three-phase, 200 VAC

Model SGD7S-			R70A	R90A	1R6A	2R8A	3R8A	5R5A	7R6A	120A	180A	200A	**330A**
Maximum Applicable Motor Capacity [kW]			0.05	0.1	0.2	0.4	0.5	0.75	1.0	1.5	2.0	3.0	5.0
Continuous Output Current [Arms]			0.66	0.91	1.6	2.8	3.8	5.5	7.6	11.6	18.5	19.6	32.9
Instantaneous Maximum Output Current [Arms]			2.1	3.2	5.9	9.3	11	16.9	17	28	42	56	84.0
Main Circuit	Power Supply		200 VAC to 240 VAC, -15% to +10%, 50 Hz/60 Hz										
	Input Current [Arms]*		0.4	0.8	1.3	2.5	3.0	4.1	5.7	7.3	10	15	25
Control Power Supply			200 VAC to 240 VAC, -15% to +10%, 50 Hz/60 Hz										
Power Supply Capacity [kVA]*			0.2	0.3	0.5	1.0	1.3	1.6	2.3	3.2	4.0	5.9	7.5
Power Loss*	Main Circuit Power Loss [W]		5.1	7.3	13.5	24.0	20.1	43.8	53.6	65.8	111.9	113.8	263.7
	Control Circuit Power Loss [W]		17	17	17	17	17	17	17	22	22	22	27
	Built-in Regenerative Resistor Power Loss [W]		–	–	–	–	8	8	8	10	16	16	36.0
	Total Power Loss [W]		22.1	24.3	30.5	41.0	45.1	68.8	78.6	97.8	149.9	151.8	326.7
Regenerative Resistor	Built-In Regenerative Resistor	Resistance [Ω]	–	–	–	–	40	40	40	20	12	12	8
		Capacity [W]	–	–	–	–	40	40	40	60	60	60	180
	Minimum Allowable External Resistance [Ω]		40	40	40	40	40	40	40	20	12	12	8
Overvoltage Category			III										

* This is the net value at the rated load.

Model SGD7S-			470A	550A	590A	780A
Maximum Applicable Motor Capacity [kW]			6.0	7.5	11	15
Continuous Output Current [Arms]			46.9	54.7	58.6	78.0
Instantaneous Maximum Output Current [Arms]			110	130	140	170
Main Circuit	Power Supply		200 VAC to 240 VAC, -15% to +10%, 50 Hz/60 Hz			
	Input Current [Arms]*1		29	37	54	73
Control Power Supply			200 VAC to 240 VAC, -15% to +10%, 50 Hz/60 Hz			
Power Supply Capacity [kVA]]*1			10.7	14.6	21.7	29.6
Power Loss]*1	Main Circuit Power Loss [W]		279.4	357.8	431.7	599.0
	Control Circuit Power Loss [W]		33	33	48	48
	External Regenerative Resistor Unit Power Loss [W]		180*2	180*3	350*3	350*3
	Total Power Loss [W]		312.4	390.8	479.7	647.0
External Regenerative Resistor Unit	External Regenerative Resistor Unit	Resistance [Ω]	6.25*2	3.13*3	3.13*3	3.13*3
		Capacity [W]	880*2	1760*3	1760*3	1760*3
	Minimum Allowable External Resistance [Ω]		5.8	2.9	2.9	2.9
Overvoltage Category			III			

*1. This is the net value at the rated load.

*2. This value is for the optional JUSP-RA04-E Regenerative Resistor Unit.

*3. This value is for the optional JUSP-RA05-E Regenerative Resistor Unit.

◆ Single-phase, 200 VAC

Model SGD7S-			R70A	R90A	1R6A	2R8A	5R5A
Maximum Applicable Motor Capacity [kW]			0.05	0.1	0.2	0.4	0.75
Continuous Output Current [Arms]			0.66	0.91	1.6	2.8	5.5
Instantaneous Maximum Output Current [Arms]			2.1	3.2	5.9	9.3	16.9
Main Circuit	Power Supply		200 VAC to 240 VAC, -15% to +10%, 50 Hz/60 Hz				
	Input Current [Arms]*		0.8	1.6	2.4	5.0	8.7
Control Power Supply			200 VAC to 240 VAC, -15% to +10%, 50 Hz/60 Hz				
Power Supply Capacity [kVA]*			0.2	0.3	0.6	1.2	1.9
Power Loss*	Main Circuit Power Loss [W]		5.1	7.3	13.5	24.0	43.8
	Control Circuit Power Loss [W]		17	17	17	17	17
	Built-in Regenerative Resistor Power Loss [W]		–	–	–	–	8
	Total Power Loss [W]		22.1	24.3	30.5	41.0	68.8
Regenerative Resistor	Built-In Regenerative Resistor	Resistance [Ω]	–	–	–	–	40
		Capacity [W]	–	–	–	–	40
	Minimum Allowable External Resistance [Ω]		40	40	40	40	40
Overvoltage Category			III				

* This is the net value at the rated load.

◆ 270 VDC

Model SGD7S-		R70A	R90A	1R6A	2R8A	3R8A	5R5A	7R6A	120A
Maximum Applicable Motor Capacity [kW]		0.05	0.1	0.2	0.4	0.5	0.75	1.0	1.5
Continuous Output Current [Arms]		0.66	0.91	1.6	2.8	3.8	5.5	7.6	11.6
Instantaneous Maximum Output Current [Arms]		2.1	3.2	5.9	9.3	11.0	16.9	17.0	28.0
Main Circuit	Power Supply	270 VDC to 324 VDC, -15% to +10%							
	Input Current [Arms]*	0.5	1.0	1.5	3.0	3.8	4.9	6.9	11
Control Power Supply		270 VDC to 324 VDC, -15% to +10%							
Power Supply Capacity [kVA]*		0.2	0.3	0.6	1	1.4	1.6	2.3	3.2
Power Loss*	Main Circuit Power Loss [W]	4.6	6.3	11.7	20.2	16.9	37.9	46.0	53.2
	Control Circuit Power Loss [W]	17	17	17	17	17	17	17	22
	Total Power Loss [W]	21.6	23.3	28.7	37.2	33.9	54.9	63.0	75.2
Overvoltage Category		III							

* This is the net value at the rated load.

Model SGD7S-		180A	200A	330A	470A	550A	590A	780A
Maximum Applicable Motor Capacity [kW]		2.0	3.0	5.0	6.0	7.5	11.0	15.0
Continuous Output Current [Arms]		18.5	19.6	32.9	46.9	54.7	58.6	78.0
Instantaneous Maximum Output Current [Arms]		42.0	56.0	84.0	110	130	140	170
Main Circuit	Power Supply	270 VDC to 324 VDC, -15% to +10%						
	Input Current [Arms]*	14	20	34	36	48	68	92
Control Power Supply		270 VDC to 324 VDC, -15% to +10%						
Power Supply Capacity [kVA]*		4.0	5.9	7.5	10.7	14.6	21.7	29.6
Power Loss*	Main Circuit Power Loss [W]	95.8	87.6	163.7	203.4	261.2	246.6	346.5
	Control Circuit Power Loss [W]	22	22	27	33	33	48	48
	Total Power Loss [W]	117.8	109.6	190.7	236.4	294.2	294.6	394.5
Overvoltage Category		III						

* This is the net value at the rated load.

◆ Three-phase, 400 VAC

Model SGD7S-			1R9D	3R5D	5R4D	8R4D	120D	170D	210D	260D	280D	370D
Maximum Applicable Motor Capacity [kW]			0.5	1	1.5	2	3	5	6	7.5	11	15
Continuous Output Current [Arms]			1.9	3.5	5.4	8.4	11.9	16	20.8	25.7	28.1	37.2
Instantaneous Maximum Output Current [Arms			5.5	8.5	14	21	28	42	55	65	70	85
Main Circuit	Power Supply		Three-phase, 380 VAC to 480 VAC, -15%% to +10%, 50 Hz/60 Hz									
	Input Current [Arms]*		1.4	2.9	4.3	5.8	8.6	14.5	17.4	21.7	31.8	43.4
Control Power Supply	Power Supply		24 VDC ±15%									
	Input Current [Arms]*		1.2						1.4		1.5	
Power Supply Capacity [kVA]*			1.1	2.3	3.5	4.5	7.1	11.7	12.4	14.4	21.9	30.6
Power Loss*	Main Circuit Power Loss [W]		19.2	30	62.3	89.4	136.8	188.7	188.4	228.5	278.2	389.8
	Control Circuit Power Loss [W]		21					22	28		32	
	Built-in Regenerative Resistor Power Loss [W]		14	14	28	28	28	36	(180)		(240)	
	Total Power Loss [W]		54.2	65	111.3	138.4	185.5	246.7	216.4	256.5	310.2	389.8
Regenerative Resistor	Built-In Regenerative Resistor	Resistance [Ω]	75	75	75	43	43	27	-			
		Capacity [W]	70	70	140	140	140	180	-			
	Minimum Allowable External Resistance [Ω]		75	75	75	43	43	27	18		14.25	
Overvoltage Category			III									

* This is the net value at the rated load.

◆ 540 VDC

Model SGD7S-		1R9D	3R5D	5R4D	8R4D	120D	170D	210D	260D	280D	370D
Maximum Applicable Motor Capacity [kW]		0.5	1	1.5	2	3	5	6	7.5	11	15
Continuous Output Current [Arms]		1.9	3.5	5.4	8.4	11.9	16	20.8	25.7	28.1	37.2
Instantaneous Maximum Output Current [Arms		5.5	8.5	14	21	28	42	55	65	70	85
Main Circuit	Power Supply	513 VDC to 648 VDC, -15%, +10%									
	Input Current [Arms]*	2	3.3	5.5	6.8	11	18	19.6	26.2	38.3	47.6
Control Power Supply	Power Supply	24 VDC ±15%									
	Input Current [Arms]*	1.2						1.4		1.5	
Power Supply Capacity [kVA]*		1.1	2.3	3.5	4.5	7.1	11.7	12.4	14.4	21.9	30.6
Power Loss*	Main Circuit Power Loss [W]	19.2	30	62.3	89.4	136.8	188.7	188.4	228.5	278.2	389.8
	Control Circuit Power Loss [W]	21					22	28		32	
	Built-in Regenerative Resistor Power Loss [W]	14	14	28	28	28	36	(180)		(240)	
	Total Power Loss [W]	37.4	45.4	69.5	94.7	131.4	166.5	216.4	228.5	310.2	389.8
Overvoltage Category		III									

* This is the net value at the rated load.

SERVOPACK Overload Protection Characteristics (200V)

The overload detection level is set for hot start conditions with a SERVOPACK surrounding air temperature of 55°C.

An overload alarm (A.710 or A.720) will occur if overload operation that exceeds the overload protection characteristics shown in the following diagram (i.e., operation on the right side of the applicable line) is performed.

The actual overload detection level will be the detection level of the connected SERVOPACK or Servo Motor that has the lower overload protection characteristics.

In most cases, that will be the overload protection characteristics of the Servo Motor.

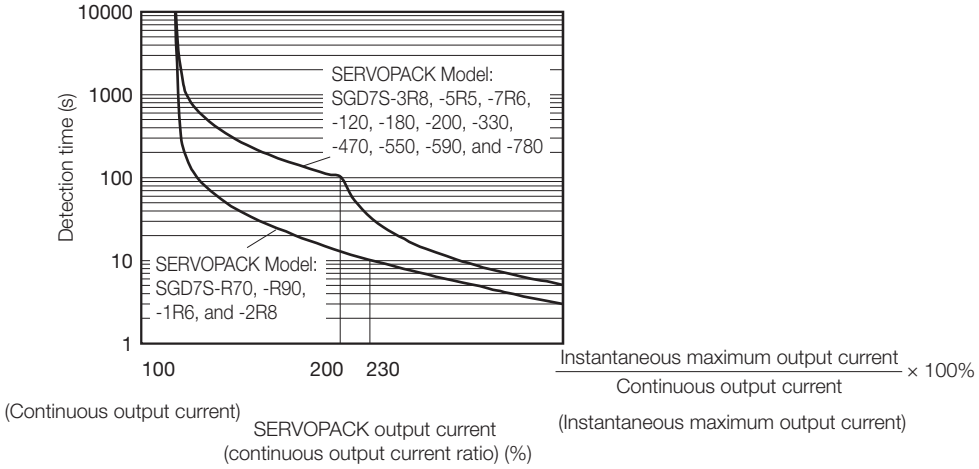

Note: The above overload protection characteristics do not mean that you can perform continuous duty operation with an output of 100% or higher.
For a Yaskawa-specified combination of SERVOPACK and Servo Motor, maintain the effective torque (or effective force) within the continuous duty zone of the torque-motor speed characteristic (or force-motor speed characteristics) of the Servo Motor.

SERVOPACK Overload Protection Characteristics (400V)

The overload detection level is set for hot start conditions with a SERVOPACK surrounding air temperature of 55°C*.

An overload alarm (A.710 or A.720) will occur if overload operation that exceeds the overload protection characteristics shown in the following diagram (i.e., operation on the right side of the applicable line) is The actual overload detection level will be the detection level of the connected SERVOPACK or Servomotor that has the lower overload protection characteristics.

In most cases, that will be the overload protection characteristics of the Servomotor.

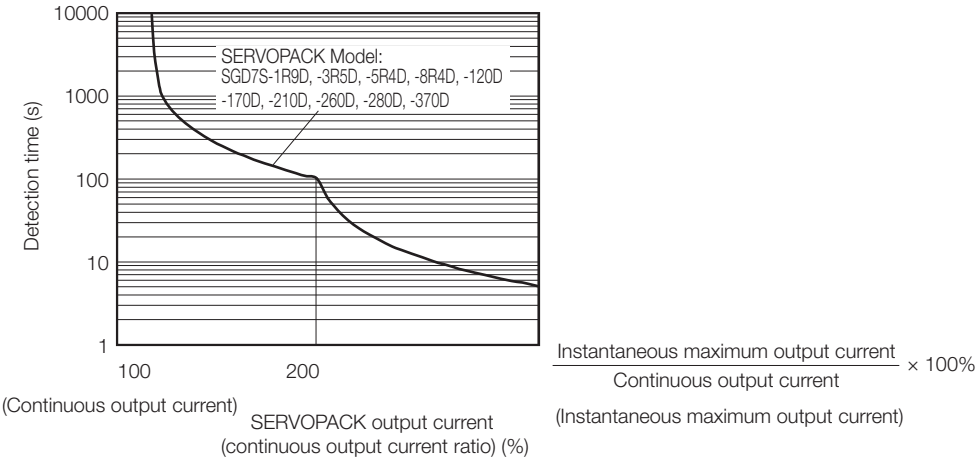

Note: The above overload protection characteristics do not mean that you can perform continuous duty operation with an output of 100% or higher.
For a YASKAWA-specified combination of SERVOPACK and Servomotor, maintain the effective torque within the continuous duty zone of the torque-motor speed characteristic of the Servomotor.
* However, the range for the SGD7S-370D is -5°C to 40°C.

Specifications (200V Models)

<table>
<tr><th colspan="2">Item</th><th>Specification</th></tr>
<tr><td colspan="2">Control Method</td><td>IGBT-based PWM control, sine wave current drive</td></tr>
<tr><td rowspan="2">Feedback</td><td>With Rotary Servo Motor</td><td>Serial encoder: 20 bits or 24 bits (incremental encoder/absolute encoder)</td></tr>
<tr><td>With Linear Servo Motor</td><td>• Absolute linear encoder (The signal resolution depends on the absolute linear encoder.)
• Incremental linear encoder (The signal resolution depends on the incremental linear encoder or Serial Converter Unit.)</td></tr>
<tr><td rowspan="8">Environmental Conditions</td><td>Surrounding Air Temperature*1</td><td>-5°C to 55°C
With derating, usage is possible between 55°C and 60°C.
Refer to the following section for derating specifications.
☞ Specifications (400 V Models) (page 433)</td></tr>
<tr><td>Storage Temperature</td><td>-20°C to 85°C</td></tr>
<tr><td>Surrounding Air Humidity</td><td>95% relative humidity max. (with no freezing or condensation)</td></tr>
<tr><td>Storage Humidity</td><td>95% relative humidity max. (with no freezing or condensation)</td></tr>
<tr><td>Vibration Resistance</td><td>4.9 m/s^2</td></tr>
<tr><td>Shock Resistance</td><td>19.6 m/s^2</td></tr>
<tr><td>Degree of Protection</td><td><table><tr><th>Class</th><th>SERVOPACK Model: SGD7S-</th></tr><tr><td>IP20</td><td>R70A, R90A, 1R6A, 2R8A, 3R8A, 5R5A, 7R6A, 120A</td></tr><tr><td>IP10</td><td>180A, 200A, 330A, 470A, 550A, 590A, 780A</td></tr></table></td></tr>
<tr><td>Pollution Degree</td><td>2
• Must be no corrosive or flammable gases.
• Must be no exposure to water, oil, or chemicals.
• Must be no dust, salts, or iron dust.</td></tr>
<tr><td>Altitude*1</td><td>1,000 m or less.
With derating, usage is possible between 1,000 m and 2,000 m.
Refer to the following section for derating specifications.
☞ Specifications (400 V Models) (page 433)</td></tr>
<tr><td>Others</td><td>Do not use the SERVOPACK in the following locations: Locations subject to static electricity noise, strong electromagnetic/magnetic fields, or radioactivity</td></tr>
<tr><td colspan="2">Applicable Standards</td><td>UL 61800-5-1, CSA C22.2 No.274, EN 50178, EN 61800-5-1, EN 55011 group 1 class A, EN 61000-6-2, EN 61000-6-4, EN 61800-3, IEC 61508-1 to 4, IEC 61800-5-2, IEC 62061, ISO 13849-1, and IEC 61326-3-1</td></tr>
<tr><td colspan="2">Mounting</td><td><table><tr><th>Mounting</th><th>SERVOPACK Model: SGD7S-</th></tr><tr><td>Base-mounted</td><td>All Models</td></tr><tr><td>Rack-mounted</td><td>R70A, R90A, 1R6A, 2R8A, 3R8A, 5R5A, 7R6A, 120A, 180A, 200A, 330A</td></tr><tr><td>Duct-ventilated</td><td>470A, 550A, 590A, 780A</td></tr></table></td></tr>
<tr><td rowspan="5">Performance</td><td>Speed Control Range</td><td>1:5000 (At the rated torque, the lower limit of the speed control range must not cause the Servo MotorServo Motor to stop.)</td></tr>
<tr><td rowspan="3">Coefficient of Speed Fluctuation*2</td><td>±0.01% of rated speed max. (for a load fluctuation of 0% to 100%)</td></tr>
<tr><td>0% of rated speed max. (for a voltage fluctuation of ±10%)</td></tr>
<tr><td>±0.1% of rated speed max. (for a temperature fluctuation of 25°C ±25°C)</td></tr>
<tr><td>Torque Control Precision (Repeatability)</td><td>±1%</td></tr>
<tr><td>Soft Start Time Setting</td><td>0 s to 10 s (Can be set separately for acceleration and deceleration.)</td></tr>
</table>

Continued from previous page.

Item			Specification
I/O Signals	Encoder Divided Pulse Output		Phase A, phase B, phase C: Line-driver output Number of divided output pulses: Any setting is allowed.
	Linear Servo Motor Overheat Protection Signal Input		Number of input points: 1 Input voltage range: 0 V to +5 V
	Sequence Input Signals	Input Signals That Can Be Allocated	Allowable voltage range: 24 VDC ±20% Number of input points: 7
			Input method: Sink inputs or source inputs Input Signals: • Origin Return Deceleration Switch (/DEC) • External Latch 1 to 3 (/EXT 1 to 3) • Forward Drive Prohibit (P-OT) and Reverse Drive Prohibit (N-OT) • Forward External Torque Limit (/P-CL) and Reverse External Torque Limit (/N-CL) • Polarity Detection (/P-DET) A signal can be allocated and the positive and negative logic can be changed.
	Sequence Output Signals	Fixed Output	Allowable voltage range: 5 VDC to 30 VDC Number of output points: 1 Output signal: Servo Alarm (ALM)
		Output Signals That Can Be Allocated	Allowable voltage range: 5 VDC to 30 VDC Number of output points: 3 (A photocoupler output (isolated) is used.)
			Output Signals: • Positioning Completion (/COIN) • Speed Coincidence Detection (/V-CMP) • Rotation Detection (/TGON) • Servo Ready Output (/S-RDY) • Torque Limit Detection (/CLT) • Speed Limit Detection (/VLT) • Brake (/BK) • Warning Output (/WARN) • Near Output (/NEAR) A signal can be allocated and the positive and negative logic can be changed.
Communications	RS-422A Communications (CN3)	Interfaces	Digital Operator (JUSP-OP05A-1-E) and personal computer (with SigmaWin+)
		1:N Communications	Up to N = 15 stations possible for RS-422A port
		Axis Address Setting	Set with parameters.
	USB Communications (CN7)	Interface	Personal computer (with SigmaWin+)
		Communications Standard	Conforms to USB2.0 standard (12 Mbps).
Displays/Indicators			CHARGE, PWR, and COM indicators, and one-digit seven-segment display

Continued from previous page.

Item		Specification
EtherCAT Communications	Applicable Communications Standards	IEC 61158 Type 12, IEC 61800-7 CiA402 Drive Profile
	Physical Layer	100BASE-TX (IEEE 802.3)
	Communications Connectors	CN6A (RJ45): EtherCAT signal input connector CN6B (RJ45): EtherCAT signal output connector
	Cable	Category 5, 4 shielded twisted pairs * The cable is automatically detected with AUTO MDIX.
	Sync Manager	SM0: Mailbox output, SM1: Mailbox input, SM2: Process data output, and SM3: Process data input
	FMMU	FMMU 0: Mapped in process data output (RxPDO) area. FMMU 1: Mapped in process data input (TxPDO) area. FMMU 2: Mapped to mailbox status.
	EtherCAT Commands (Data Link Layer)	APRD, FPRD, BRD, LRD, APWR, FPWR, BWR, LWR, ARMW, and FRMW (APRW, FPRW, BRW, and LRW commands are not supported.)
	Process Data	Assignments can be changed with PDO mapping.
	Mailbox (CoE)	Emergency messages, SDO requests, SDO responses, and SDO information (TxPDO/RxPDO and remote TxPDO/RxPDO are not supported.)
	Distributed Clocks	Free-Run Mode and DC Mode (Can be switched.) Applicable DC cycles: 125 µs to 4 ms in 125-µs increments
	Slave Information Interface	256 bytes (read-only)
	Indicators	EtherCAT communications in progress: Link/Activity x 2 EtherCAT communications status: RUN x 1 EtherCAT error status: ERR x 1
CiA402 Drive Profile		• Homing Mode • Profile Position Mode • Interpolated Position Mode • Profile Velocity Mode • Profile Torque Mode • Cyclic Synchronous Position Mode • Cyclic Synchronous Velocity Mode • Cyclic Synchronous Torque Mode • Touch Probe Function • Torque Limit Function
Analog Monitor (CN5)		Number of points: 2 Output voltage range: ±10 VDC (effective linearity range: ±8 V) Resolution: 16 bits Accuracy: ±20 mV (Typ) Maximum output current: ±10 mA Settling time (±1%): 1.2 ms (Typ)
Dynamic Brake (DB)		Activated when a servo alarm or overtravel (OT) occurs, or when the power supply to the main circuit or servo is OFF.
Regenerative Processing		Built-in (An external resistor must be connected to the SGD7S-470A to -780A.) ☞ *Built-In Regenerative Resistor* **(page 539)**
Overtravel (OT) Prevention		Stopping with dynamic brake, deceleration to a stop, or coasting to a stop for the P-OT (Forward Drive Prohibit) or N-OT (Reverse Drive Prohibit) signal
Protective Functions		Overcurrent, overvoltage, low voltage, overload, regeneration error, etc.
Utility Functions		Gain adjustment, alarm history, jogging, origin search, etc.
Safety Functions	Inputs	/HWBB1 and /HWBB2: Base block signals for Power Modules
	Output	EDM1: Monitors the status of built-in safety circuit (fixed output).
	Applicable Standards*3	ISO13849-1 PLe (Category 3), IEC61508 SIL3
Option Module		Fully-Closed Modules and Safety Modules Note: You cannot use a Fully-Closed Module and a Safety Module together.

*1. If you combine a Σ-7-Series SERVOPACK with a Σ-V-Series Option Module, the following Σ-V-Series SERVOPACKs specifications must be used: a surrounding air temperature of 0°C to 55°C and an altitude of 1,000 m max. Also, the applicable range cannot be increased by derating.

*2. The coefficient of speed fluctuation for load fluctuation is defined as follows:

$$\text{Coefficient of speed fluctuation} = \frac{\text{No-load motor speed - Total-load motor speed}}{\text{Rated motor speed}} \times 100\%$$

*3. Always perform risk assessment for the system and confirm that the safety requirements are met.

Specifications (400 V Models)

Item		Specification
Drive Method		IGBT-based PWM control, sine wave current drive
Feedback	With Rotary Servo Motor	Serial encoder: 24 bits (incremental encoder/absolute encoder)
	With Linear Servo Motor	• Absolute linear encoder (The signal resolution depends on the absolute linear encoder.) • Incremental linear encoder (The signal resolution depends on the incremental linear encoder or Serial Converter Unit.)
Environmental Conditions	Surrounding Air Temperature*1	-5°C to 55°C (60°C with derating) However the range for the SGD7S-370D is -5°C to 40°C Refer to the following section for derating specifications. ☞ *Specifications (400 V Models)* **(page 433)**
	Storage Temperature	-20°C to 85°C
	Surrounding Air Humidity	95% relative humidity max. (with no freezing or condensation)
	Storage Humidity	95% relative humidity max. (with no freezing or condensation)
	Vibration Resistance	4.9 m/s^2
	Shock Resistance	19.6 m/s^2
	Degree of Protection	IP10
	Pollution Degree	2 • Must be no corrosive or flammable gases. • Must be no exposure to water, oil, or chemicals. • Must be no dust, salts, or iron dust.
	Altitude*1	1,000 m or less. With derating, usage is possible between 1,000 m and 2,000 m. Refer to the following section for derating specifications. ☞ *Specifications (400 V Models)* **(page 433)**
	Others	Do not use the SERVOPACK in the following locations: Locations subject to static electricity noise, strong electromagnetic/magnetic fields, or radioactivity
Applicable Standards		UL 61800-5-1, CSA C22.2 No.274, EN 50178, EN 61800-5-1, EN 55011 group 1 class A, EN 61000-6-2, EN 61000-6-4, EN 61800-3, IEC 61508-1 to 4, IEC 61800-5-2, IEC 62061, ISO 13849-1, and IEC 61326-3-1
Mounting		Base-mounted
Performance	Speed Control Range	1:5000 (At the rated torque, the lower limit of the speed control range must not cause the Servo Motor to stop.)
	Coefficient of Speed Fluctuation*2	±0.01% of rated speed max. (for a load fluctuation of 0% to 100%)
		0% of rated speed max. (for a voltage fluctuation of ±10%)
		±0.1% of rated speed max. (for a temperature fluctuation of 25°C ±25°C)
	Torque Control Precision (Repeatability)	±1%
	Soft Start Time Setting	0 s to 10 s (Can be set separately for acceleration and deceleration.)

Continued from previous page.

Item			Specification
I/O Signals	Encoder Divided Pulse Output		Phase A, phase B, phase C: Line-driver output Number of divided output pulses: Any setting is allowed.
	Linear Servo Motor Overheat Protection Signal Input		Number of input points: 1 Input voltage range: 0 V to +5 V
	Sequence Input Signals	Input Signals That Can Be Allocated	Allowable voltage range: 24 VDC ±20% Number of input points: 7
			Input method: Sink inputs or source inputs Input Signals: • P-OT (Forward Drive Prohibit) and N-OT (Reverse Drive Prohibit) signals • /Probe1 (Probe 1 Latch Input) signal • /Probe2 (Probe 2 Latch Input) signal • /Home (Home Switch Input) signal • /P-CL (Forward External Torque Limit) and /N-CL (Reverse External Torque Limit) signals • /SI0 and /SI3 (General-Purpose Input) signals A signal can be allocated and the positive and negative logic can be changed.
	Sequence Output Signals	Fixed Output	Allowable voltage range: 5 VDC to 30 VDC Number of output points: 1 Output signal: Servo Alarm (ALM)
		Output Signals That Can Be Allocated	Allowable voltage range: 5 VDC to 30 VDC Number of output points: 5 (A photocoupler output (isolated) is used.)
			Output Signals: • /COIN (Positioning Completion) signal • /V-CMP (Speed Coincidence Detection) signal • /TGON (Rotation Detection) signal • /S-RDY (Servo Ready) signal • /CLT (Torque Limit Detection) signal • /VLT (Speed Limit Detection) signal • /BK (Brake) signal • /WARN (Warning) signal • /NEAR (Near) signal • /ZONE0 (ZONE Signal 1 Output) signal • /ZONE1 (ZONE Signal 2 Output) signal • /ZONE2 (ZONE Signal 3 Output) signal • /ZONE3 (ZONE Signal 4 Output) signal • /nZONE (nZONE output) signal A signal can be allocated and the positive and negative logic can be changed.
Communications	RS-422A Communications (CN3)	Interfaces	Digital Operator (JUSP-OP05A-1-E)
		1:N Communications	Up to N = 15 stations possible for RS-422A port
		Axis Address Setting	Set with parameters.
	USB Communications (CN7)	Interface	Personal Computer (with SigmaWin+) The software version of the SigmaWin+ must be version 7.11 or higher.
		Communications Standard	Conforms to USB2.0 standard (12 Mbps).
Displays/Indicators			CHARGE, PWR, RUN, ERR, and L/A (A and B) indicators, and one-digit seven-segment display
EtherCAT Communications Setting Switches			EtherCAT secondary address (S1 and S2), 16 positions

Continued from previous page.

Item		Specification
EtherCAT Communications	Applicable Communications Standards	IEC 61158 Type 12, IEC 61800-7 CiA402 Drive Profile
	Physical Layer	03100BASE-TX (IEEE 802.3)
	Communications Connectors	CN6A (RJ45): EtherCAT signal input connector CN6B (RJ45): EtherCAT signal output connector
	Cable	Category 5, 4 shielded twisted pairs * The cable is automatically detected with AUTO MDIX.
	Sync Manager	SM0: Mailbox output, SM1: Mailbox input, SM2: Process data output, and SM3: Process data input
	FMMU	FMMU 0: Mapped in process data output (RxPDO) area. FMMU 1: Mapped in process data input (TxPDO) area. FMMU 2: Mapped to mailbox status
	EtherCAT Commands (Data Link Layer)	APRD, FPRD, BRD, LRD, APWR, FPWR, BWR, LWR, ARMW, and FRMW (APRW, FPRW, BRW, and LRW commands are not supported.)
	Process Data	Assignments can be changed with PDO mapping
	Mailbox (CoE)	Emergency messages, SDO requests, SDO responses, and SDO information (TxPDO/RxPDO and remote TxPDO/RxPDO are not supported.)
	Distributed Clocks	Free-Run Mode and DC Mode (Can be switched.) Applicable DC cycles: 125 s to 4 ms in 125-s increments
	Slave Information Interface	256 bytes (read-only)
	Indicators	EtherCAT communications in progress: Link/Activity x 2 EtherCAT communications status: RUN x 1 EtherCAT error status: ERR x 1
CiA402 Drive Profile		• Homing Mode • Profile Position Mode • Interpolated Position Mode • Profile Velocity Mode • Profile Torque Mode • Cyclic Synchronous Position Mode • Cyclic Synchronous Velocity Mode • Cyclic Synchronous Torque Mode • Touch Probe Function • Torque Limit Function
Analog Monitor (CN5)		Number of points: 2 Output voltage range: ±10 VDC (effective linearity range: ±8 V) Resolution: 16 bits Accuracy: ±20 mV (Typ) Maximum output current: ±10 mA Settling time (±1%): 1.2 ms (Typ)
Dynamic Brake (DB)		Activated when a servo alarm or overtravel (OT) occurs, or when the power supply to the main circuit or servo is OFF.
Regenerative Processing		Built-in ☞ *Built-In Regenerative Resistor* (page 539)
Overtravel (OT) Prevention		Stopping with dynamic brake, deceleration to a stop, or coasting to a stop for the P-OT (Forward Drive Prohibit) or N-OT (Reverse Drive Prohibit) signal
Protective Functions		Overcurrent, overvoltage, low voltage, overload, regeneration error, etc.
Utility Functions		Gain adjustment, alarm history, jogging, origin search, etc.
Safety Functions	Inputs	/HWBB1 and /HWBB2: Base block signals for Power Modules
	Output	EDM1: Monitors the status of built-in safety circuit (fixed output).
	Applicable Standards[*3]	ISO13849-1 PLe (Category 3), IEC61508 SIL3
Option Module		Fully-Closed Modules

*1. If you combine a Σ-7-Series SERVOPACK with a Σ-V-Series Option Module, the surrounding air temperature of 0°C to 55°C and an altitude of 1,000 m max. must be used. Also, the applicable range cannot be increased by derating.

*2. The coefficient of speed fluctuation for load fluctuation is defined as follows:

$$\text{Coefficient of speed fluctuation} = \frac{\text{No-load motor speed - Total-load motor speed}}{\text{Rated motor speed}} \times 100\%$$

*3. Always perform risk assessment for the system and confirm that the safety requirements are met.

Derating Specifications

If you use the SERVOPACK at a surrounding air temperature of 55°C to 60°C or at an altitude of 1,000 m to 2,000 m, you must apply the derating rates given in the following graphs.

◆ SGD7S-R70A, -R90A, -1R6A, and -2R8A

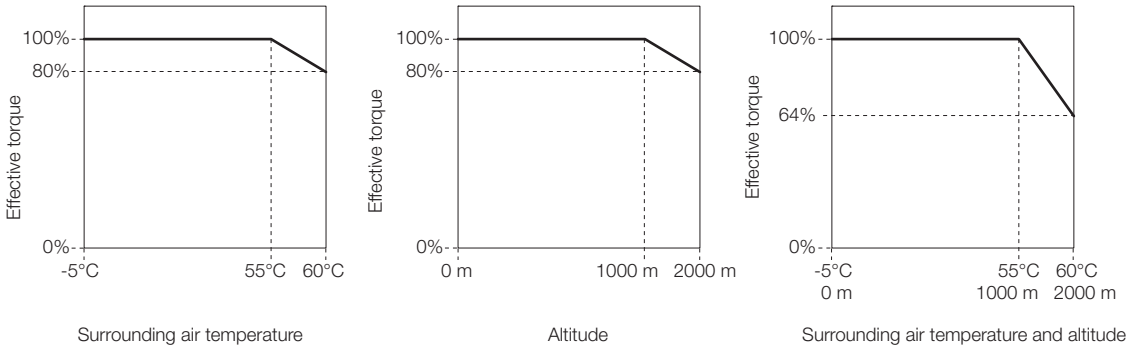

◆ SGD7S-3R8A, -5R5A, -7R6A, -120A, -180A, -200A, -330A, -470A, -550A, -590A, and -780A

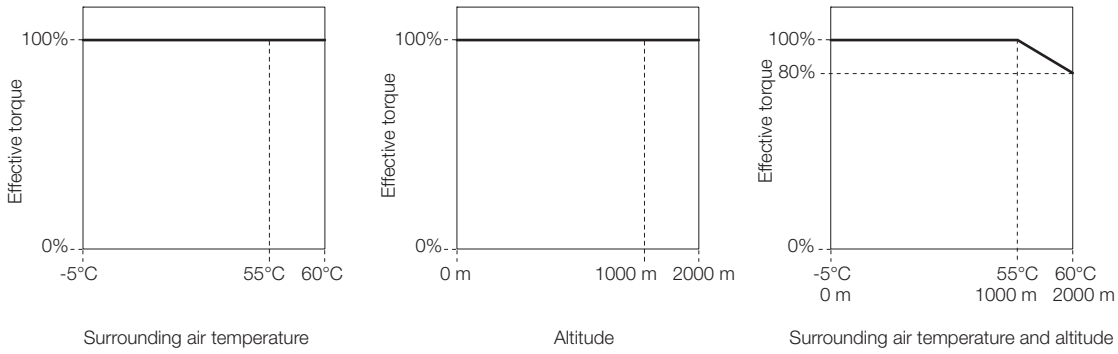

Σ-7W Two-axis MECHATROLINK-III Communications Reference SERVOPACKs

Model Designations

SGD7W - 2R8 A 20 A 700

- SGD7W: Σ-7 Series Σ-7W SERVOPACKs
- 1st+2nd+3rd digits
- 4th digit
- 5th+6th digits
- 7th digit
- 8th+9th+10th digits

1st+2nd+3rd digits Maximum Applicable Motor Capacity per Axis

Voltage	Code	Specification
Three-phase, 200 VAC	1R6 *1	0.2 kW
	2R8 *1	0.4 kW
	5R5 *1	0.75 kW
	7R6	1.0 kW
Three-phase, 400 VAC	2R6	0.75 kW
	5R4	1.5 kW

5th+6th digits Interface*2

Code	Specification
20	MECHATROLINK-III communications reference with IMI connector (200V: 0.75 kW and 1.0 kW Units)
30	MECHATROLINK-III communications reference with RJ45 connector (200V: 0.2 kW and 0.4 kW Units and 400V Units)

8th+9th+10th digits Hardware Options Specification

Code	Specification	Applicable Models
700	HWBB Option *3	200 V
-	Without options	400 V
026	With relay for holding brake	

Shaded options are non-stock

4th digit Voltage

Code	Specification
D	400 VAC

7th digit Design Revision Order

Code	Specification
A	Global Design Revision for 200V
B	Global Design Revision for 400V

*1. You can use these models with either a single-phas or three phase power supply input

*2. The same SERVOPACKs are used for both Rotary Servo Motors and Linear Servo Motors

*3. Refer to the following manual for details:
Sigma-7 Series AC Servo Drive SGD7W SERVOPACK with Hardware Option Specifications HWBB Function Product Manual (Manual No: SIEPS800000172)

Ratings and Specifications

Ratings

◆ Three-phase, 200 VAC

Model SGD7W-			1R6A	2R8A	5R5A	7R6A
Maximum Applicable Motor Capacity per Axis [kW]			0.2	0.4	0.75	1.0
Continuous Output Current per Axis [Arms]			1.6	2.8	5.5	7.6
Instantaneous Maximum Output Current per Axis [Arms]			5.9	9.3	16.9	17.0
Main Circuit	Power Supply		200 VAC to 240 VAC, -15% to +10%, 50 Hz/60 Hz			
	Input Current [Arms]*		2.5	4.7	7.8	11
Control Power Supply			200 VAC to 240 VAC, -15% to +10%, 50 Hz/60 Hz			
Power Supply Capacity [kVA]*			1.0	1.9	3.2	4.5
Power Loss*	Main Circuit Power Loss [W]		27.0	48.0	87.6	107.2
	Control Circuit Power Loss [W]		24	24	24	24
	Built-in Regenerative Resistor Power Loss [W]		8	8	16	16
	Total Power Loss [W]		59.0	80.0	127.6	147.2
Regenerative Resistor	Built-In Regenerative Resistor	Resistance [Ω]	40	40	12	12
		Capacity [W]	40	40	60	60
	Minimum Allowable External Resistance [Ω]		40	40	40	40
Overvoltage Category			III			

* This is the net value at the rated load.

◆ Single-phase, 200 VAC

Model SGD7W-			1R6A	2R8A	5R5A*1
Maximum Applicable Motor Capacity per Axis [kW]			0.2	0.4	0.75
Continuous Output Current per Axis [Arms]			1.6	2.8	5.5
Instantaneous Maximum Output Current per Axis [Arms]			5.9	9.3	16.9
Main Circuit	Power Supply		200 VAC to 240 VAC, -15% to +10%, 50 Hz/60 Hz		
	Input Current [Arms]*2		5.5	11	12
Control Power Supply			200 VAC to 240 VAC, -15% to +10%, 50 Hz/60 Hz		
Power Supply Capacity [kVA]*2			1.3	2.4	2.7
Power Loss*2	Main Circuit Power Loss [W]		27.0	48.0	87.6
	Control Circuit Power Loss [W]		24	24	24
	Built-in Regenerative Resistor Power Loss [W]		8	8	16
	Total Power Loss [W]		59.0	80.0	127.6
Regenerative Resistor	Built-In Regenerative Resistor	Resistance [Ω]	40	40	12
		Capacity [W]	40	40	60
	Minimum Allowable External Resistance [Ω]		40	40	40
Overvoltage Category			III		

*1. If you use the SGD7W-5R5A with a single-phase 200-VAC power supply input, derate the load ratio to 65%. An example is given below.
If the load ratio of the first axis is 90%, use a load ratio of 40% for the second axis so that average load ratio for both axes is 65% ((90% + 40%)/2 = 65%).

*2. This is the net value at the rated load.

◆ 270 VDC

Model SGD7W-		**1R6A**	**2R8A**	**5R5A**	**7R6A**
Maximum Applicable Motor Capacity [kW]		0.2	0.4	0.75	1.0
Continuous Output Current [Arms]		1.6	2.8	5.5	7.6
Instantaneous Maximum Output Current [Arms]		5.9	9.3	16.9	17.0
Main Circuit	Power Supply	270 VDC to 324 VDC, -15% to +10%			
	Input Current [Arms]*	3.0	5.8	9.7	14
Control Power Supply		270 VDC to 324 VDC, -15% to +10%			
Power Supply Capacity [kVA]*		1.2	2	3.2	4.6
Power Loss*	Main Circuit Power Loss [W]	23	40	76	92
	Control Circuit Power Loss [W]	24	24	24	24
	Total Power Loss [W]	47	64	100	116
Overvoltage Category		III			

* This is the net value at the rated load.

◆ Three-phase, 400 VAC

Model SGD7W-			2R6D	5R4D
Maximum Applicable Motor Capacity per Axis [kW]			0.75	1.5
Continuous Output Current per Axis [Arms]			2.6	5.4
Instantaneous Maximum Output Current per Axis [Arms]			8.5	14
Main Circuit	Power Supply		Three-phase 380 VAC to 480 VAC, -15% to +10%, 50 Hz/60 Hz	
	Input Current [Arms]*		4.4	8.6
Control	Power Supply		24 VDC ±15%	
	Input Current [Arms]*		1.2	
Power Supply Capacity [kVA]*			3.5	6.8
Power Loss*	Main Circuit Power Loss [W]		65.4	108.6
	Control Circuit Power Loss [W]		21	
	Built-in Regenerative Resistor Power Loss [W]		28	28
	Total Power Loss [W]		114.4	157.6
Regenerative Resistor	Built-In Regenerative Resistor	Resistance [Ω]	43	43
		Capacity [W]	140	140
	Minimum Allowable External Resistance [Ω]		43	43
Overvoltage Category			III	

* This is the net value at the rated load.

◆ 540 VDC

Model SGD7W-		2R6D	5R4D
Maximum Applicable Motor Capacity per Axis [kW]		0.75	1.5
Continuous Output Current per Axis [Arms]		2.6	5.4
Instantaneous Maximum Output Current per Axis [Arms]		8.5	14
Main Circuit	Power Supply	513 VDC to 648 VDC, -15% to +10%	
	Input Current [Arms]*	5	11
Control	Power Supply	24 VDC ±15%	
	Input Current [Arms]*	1.2	
Power Supply Capacity [kVA]*		3.5	6.8
Power Loss*	Main Circuit Power Loss [W]	47.4	90.6
	Control Circuit Power Loss [W]	21	
	Total Power Loss [W]	68.4	111.6
Overvoltage Category		III	

* This is the net value at the rated load.

SERVOPACK Overload Protection Characteristics (200 V Models)

The overload detection level is set for hot start conditions with a SERVOPACK surrounding air temperature of 55°C.

An overload alarm (A.710 or A.720) will occur if overload operation that exceeds the overload protection characteristics shown in the following diagram (i.e., operation on the right side of the applicable line) is performed.

The actual overload detection level will be the detection level of the connected SERVOPACK or Servo Motor that has the lower overload protection characteristics.

In most cases, that will be the overload protection characteristics of the Servo Motor.

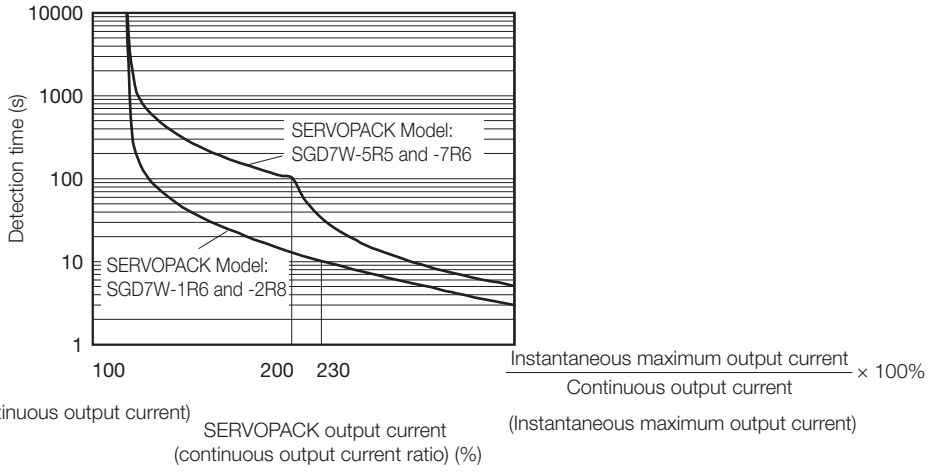

Note: The above overload protection characteristics do not mean that you can perform continuous duty operation with an output of 100% or higher.
For a Yaskawa-specified combination of SERVOPACK and Servo Motor, maintain the effective torque (or effective force) within the continuous duty zone of the torque-motor speed characteristic (or force-motor speed characteristics) of the Servo Motor.

SERVOPACK Overload Protection Characteristics (400 V Models)

The overload detection level is set for hot start conditions with a SERVOPACK surrounding air temperature of 55°C.

An overload alarm (A.710 or A.720) will occur if overload operation that exceeds the overload protection characteristics shown in the following diagram (i.e., operation on the right side of the applicable line) is performed.

The actual overload detection level will be the detection level of the connected SERVOPACK or Servo Motor that has the lower overload protection characteristics.

In most cases, that will be the overload protection characteristics of the Servo Motor.

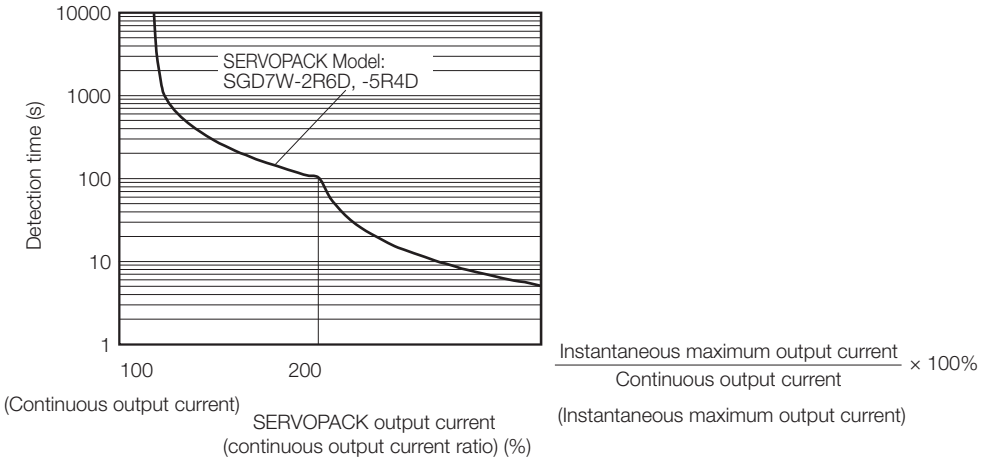

Note: The above overload protection characteristics do not mean that you can perform continuous duty operation with an output of 100% or higher.
For a Yaskawa-specified combination of SERVOPACK and Servo Motor, maintain the effective torque (or effective force) within the continuous duty zone of the torque-motor speed characteristic (or force-motor speed characteristics) of the Servo Motor.

Specifications (200V Models)

Item		Specification
Control Method		IGBT-based PWM control, sine wave current drive
Feedback	With Rotary Servo Motor	Serial encoder: 20 bits or 24 bits (incremental encoder/absolute encoder)
	With Linear Servo Motor	• Absolute linear encoder (The signal resolution depends on the absolute linear encoder.) • Incremental linear encoder (The signal resolution depends on the incremental linear encoder or Serial Converter Unit.)
Environmental Conditions	Surrounding Air Temperature	-5°C to 55°C With derating, usage is possible between 55°C and 60°C. Refer to the following section for derating specifications. ☞ *Specifications (400V Models)* (page 447)
	Storage Temperature	-20°C to 85°C
	Surrounding Air Humidity	95% relative humidity max. (with no freezing or condensation)
	Storage Humidity	95% relative humidity max. (with no freezing or condensation)
	Vibration Resistance	4.9 m/s^2
	Shock Resistance	19.6 m/s^2
	Degree of Protection	IP20
	Pollution Degree	2 • Must be no corrosive or flammable gases. • Must be no exposure to water, oil, or chemicals. • Must be no dust, salts, or iron dust.
	Altitude	1,000 m or less. With derating, usage is possible between 1,000 m and 2,000 m. Refer to the following section for derating specifications. ☞ *Specifications (400V Models)* (page 447)
	Others	Do not use the SERVOPACK in the following locations: Locations subject to static electricity noise, strong electromagnetic/magnetic fields, or radioactivity
Applicable Standards		UL 61800-5-1, CSA C22.2 No.274, EN50178, EN 61800-5-1, EN 55011 group 1 class A, EN 61000-6-2, EN 61000-6-4, and EN 61800-3
Mounting		Base-mounted or rack-mounted
Performance	Speed Control Range	1:5000 (At the rated torque, the lower limit of the speed control range must not cause the Servo Motor to stop.)
	Coefficient of Speed Fluctuation*	±0.01% of rated speed max. (for a load fluctuation of 0% to 100%)
		0% of rated speed max. (for a voltage fluctuation of ±10%)
		±0.1% of rated speed max. (for a temperature fluctuation of 25°C ±25°C)
	Torque Control Precision (Repeatability)	±1%
	Soft Start Time Setting	0 s to 10 s (Can be set separately for acceleration and deceleration.)

Continued on next page.

Continued from previous page.

Item			Specification
I/O Signals	Linear Servo Motor Overheat Protection Signal Input		Number of input points: 2 Input voltage range: 0 V to +5 V
	Sequence Input Signals	Input Signals That Can Be Allocated	Allowable voltage range: 24 VDC ±20% Number of input points: 12
			Input method: Sink inputs or source inputs Input Signals • Origin Return Deceleration Switch (/DEC) • External Latch (/EXT 1 to 3) • Forward Drive Prohibit (P-OT) and Reverse Drive Prohibit (N-OT) • Forward External Torque Limit (/P-CL) and Reverse External Torque Limit (/N-CL) • Polarity Detection (/P-DET) A signal can be allocated and the positive and negative logic can be changed.
	Sequence Output Signals	Fixed Output	Allowable voltage range: 5 VDC to 30 VDC Number of output points: 2 Output signal: Servo Alarm (ALM)
		Output Signals That Can Be Allocated	Allowable voltage range: 5 VDC to 30 VDC Number of output points: 5 (A photocoupler output (isolated) is used.)
			Output Signals • Positioning Completion (/COIN) • Speed Coincidence Detection (/V-CMP) • Rotation Detection (/TGON) • Servo Ready (/S-RDY) • Torque Limit Detection (/CLT) • Speed Limit Detection (/VLT) • Brake (/BK) • Warning (/WARN) • Near (/NEAR) A signal can be allocated and the positive and negative logic can be changed.
Communications	RS-422A Communications (CN3)	Interfaces	Digital Operator (JUSP-OP05A-1-E) and personal computer (with SigmaWin+)
		1:N Communications	Up to N = 15 stations possible for RS-422A port
		Axis Address Settings	Set with parameters.
	USB Communications (CN7)	Interface	Personal computer (with SigmaWin+)
		Communications Standard	Conforms to USB2.0 standard (12 Mbps).
Displays/Indicators			CHARGE, PWR, COM, L1, and L2 indicators, and two, one-digit seven-segment displays

Continued on next page.

Continued from previous page.

Item		Specification
MECHATROLINK-III Communications	Communications Protocol	MECHATROLINK-III
	Station Address Settings	03 to EF hex (maximum number of slaves: 62) The rotary switches (S1 and S2) are used to set the station address.
	Extended Address Setting	Axis 1: 00 hex, Axis 2: 01 hex
	Baud Rate	100 Mbps
	Transmission Cycle	250 μs, 500 μs, 750 μs, 1.0 ms to 4.0 ms (multiples of 0.5 ms)
	Number of Transmission Bytes	32 or 48 bytes/station A DIP switch (S3) is used to select the baud rate.
Reference Method	Performance	Position, speed, or torque control with MECHATROLINK-III communications
	Reference Input	MECHATROLINK-III commands (sequence, motion, data setting, data access, monitoring, adjustment, etc.)
	Profile	MECHATROLINK-III standard servo profile
MECHATROLINK-III Communications Setting Switches		Rotary switch (S1 and S2) positions: 16
		Number of DIP switch (S3) pins: 4
Analog Monitor (CN5)		Number of points: 2 Output voltage range: ±10 VDC (effective linearity range: ±8 V) Resolution: 16 bits Accuracy: ±20 mV (Typ) Maximum output current: ±10 mA Settling time (±1%): 1.2 ms (Typ)
Dynamic Brake (DB)		Activated when a servo alarm or overtravel (OT) occurs, or when the power supply to the main circuit or servo is OFF.
Regenerative Processing		Built-in
Overtravel (OT) Prevention		Stopping with dynamic brake, deceleration to a stop, or coasting to a stop for the P-OT (Forward Drive Prohibit) or N-OT (Reverse Drive Prohibit) signal
Protective Functions		Overcurrent, overvoltage, low voltage, overload, regeneration error, etc.
Utility Functions		Gain adjustment, alarm history, jogging, origin search, etc.
Option Module		Option Module cannot be attached.

* The coefficient of speed fluctuation for load fluctuation is defined as follows:

$$\text{Coefficient of speed fluctuation} = \frac{\text{No-load motor speed - Total-load motor speed}}{\text{Rated motor speed}} \times 100\%$$

Specifications (400V Models)

Item		Specification
Control Method		IGBT-based PWM control, sine wave current drive
Feedback	With Rotary Servo Motor	Serial encoder: 24 bits (incremental encoder/absolute encoder)
	With Linear Servo Motor	• Absolute linear encoder (The signal resolution depends on the absolute linear encoder.) • Incremental linear encoder (The signal resolution depends on the incremental linear encoder or Serial Converter Unit.)
Environmental Conditions	Surrounding Air Temperature	-5°C to 55°C With derating, usage is possible between 55°C and 60°C. Refer to the following section for derating specifications. ☞ *Specifications (400V Models)* (page 447)
	Storage Temperature	-20°C to 85°C
	Surrounding Air Humidity	95% relative humidity max. (with no freezing or condensation)
	Storage Humidity	95% relative humidity max. (with no freezing or condensation)
	Vibration Resistance	4.9 m/s^2
	Shock Resistance	19.6 m/s^2
	Degree of Protection	IP10
	Pollution Degree	2 • Must be no corrosive or flammable gases. • Must be no exposure to water, oil, or chemicals. • Must be no dust, salts, or iron dust.
	Altitude	1,000 m or less. With derating, usage is possible between 1,000 m and 2,000 m. Refer to the following section for derating specifications. ☞ *Specifications (400V Models)* (page 447)
	Others	Do not use the SERVOPACK in the following locations: Locations subject to static electricity noise, strong electromagnetic/magnetic fields, or radioactivity
Applicable Standards		UL 61800-5-1, CSA C22.2 No.274, EN50178, EN 61800-5-1, EN 55011 group 1 class A, EN 61000-6-2, EN 61000-6-4, and EN 61800-3
Mounting		Base-mounted
Performance	Speed Control Range	1:5000 (At the rated torque, the lower limit of the speed control range must not cause the Servo Motor to stop.)
	Coefficient of Speed Fluctuation*	±0.01% of rated speed max. (for a load fluctuation of 0% to 100%)
		0% of rated speed max. (for a voltage fluctuation of ±10%)
		±0.1% of rated speed max. (for a temperature fluctuation of 25°C ±25°C)
	Torque Control Precision (Repeatability)	±1%
	Soft Start Time Setting	0 s to 10 s (Can be set separately for acceleration and deceleration.)

Continued on next page.

Continued from previous page.

Item			Specification
I/O Signals	Linear Servo Motor Overheat Protection Signal Input		Number of input points: 2 Input voltage range: 0 V to +5 V
	Sequence Input Signals	Input Signals That Can Be Allocated	Allowable voltage range: 24 VDC ±20% Number of input points: 10
			Input method: Sink inputs or source inputs Input Signals • /DEC (Origin Return Deceleration Switch) signal • /EXT1 to /EXT3 (External Latch Input 1 to 3) signals • P-OT (Forward Drive Prohibit) and N-OT (Reverse Drive Prohibit) signals • /P-CL (Forward External Torque Limit) and /N-CL (Reverse External • Torque Limit) signals • /P-DET (Polarity Detection) signal A signal can be allocated and the positive and negative logic can be changed.
	Sequence Output Signals	Fixed Output	Allowable voltage range: 5 VDC to 30 VDC Number of output points: 1 Output signal: Servo Alarm (ALM)
		Output Signals That Can Be Allocated	Allowable voltage range: 5 VDC to 30 VDC Number of output points: 6 (A photocoupler output (isolated) is used.)
			Output Signals • /COIN (Positioning Completion) signal • /V-CMP (Speed Coincidence Detection) signal • /TGON (Rotation Detection) signal • /S-RDY (Servo Ready) signal • /CLT (Torque Limit Detection) signal • /VLT (Speed Limit Detection) signal • /BK (Brake) signal • /WARN (Warning) signal • /NEAR (Near) signal A signal can be allocated and the positive and negative logic can be changed.
Communications	RS-422A Communications (CN3)	Interfaces	Digital Operator (JUSP-OP05A-1-E)
		1:N Communications	Up to N = 15 stations possible for RS-422A port
		Axis Address Settings	Set with parameters.
	USB Communications (CN7)	Interface	Personal Computer (with SigmaWin+) The software version of the SigmaWin+ must be version 7.11 or higher.
		Communications Standard	Conforms to USB2.0 standard (12 Mbps).
Displays/Indicators			CHARGE, PWR, CN, L1, and L2 indicators, and two, one-digit seven-segment displays

Continued on next page.

Continued from previous page.

Item		Specification
MECHATROLINK-III Communications	Communications Protocol	MECHATROLINK-III
	Station Address Settings	03 to EF hex (maximum number of slaves: 62) The rotary switches (S1 and S2) are used to set the station address.
	Extended Address Setting	Axis 1: 00 hex, Axis 2: 01 hex
	Baud Rate	100 Mbps
	Transmission Cycle	250 μs, 500 μs, 750 μs, 1.0 ms to 4.0 ms (multiples of 0.5 ms)
	Number of Transmission Bytes	32 or 48 bytes/station A DIP switch (S3) is used to select the baud rate.
Reference Method	Performance	Position, speed, or torque control with MECHATROLINK-III communications
	Reference Input	MECHATROLINK-III commands (sequence, motion, data setting, data access, monitoring, adjustment, etc.)
	Profile	MECHATROLINK-III standard servo profile
Analog Monitor (CN5)		Number of points: 2 Output voltage range: ±10 VDC (effective linearity range: ±8 V) Resolution: 16 bits Accuracy: ±20 mV (Typ) Maximum output current: ±10 mA Settling time (±1%): 1.2 ms (Typ)
Dynamic Brake (DB)		Activated when a servo alarm or overtravel (OT) occurs, or when the power supply to the main circuit or servo is OFF.
Regenerative Processing		Built-in
Overtravel (OT) Prevention		Stopping with dynamic brake, deceleration to a stop, or coasting to a stop for the P-OT (Forward Drive Prohibit) or N-OT (Reverse Drive Prohibit) signal
Protective Functions		Overcurrent, overvoltage, low voltage, overload, regeneration error, etc.
Utility Functions		Gain adjustment, alarm history, jogging, origin search, etc.
Safety Functions	Inputs	/HWBB_A1, /HWWB_A2, /HWWB_B1 and /HWBB_B2: Base block signals for Power Modules
	Outputs	EDM_A and EDM_B: Monitor the status of built-in safety circuits (fixed outputs).
	Applicable Standards	ISO13849-1 PLe (Category 3), IEC61508 SIL3
Option Module		Option Module Safety

*1. The coefficient of speed fluctuation for load fluctuation is defined as follows:

$$\text{Coefficient of speed fluctuation} = \frac{\text{No-load motor speed - Total-load motor speed}}{\text{Rated motor speed}} \times 100\%$$

*2. . Always perform risk assessment for the system and confirm that the safety requirements are met.

Derating Specifications

If you use the SERVOPACK at a surrounding air temperature of 55°C to 60°C or at an altitude of 1,000 m to 2,000 m, you must apply the derating rates given in the following graphs.

◆ SGD7W-1R6A, -2R8A, -5R5A, and -7R6A

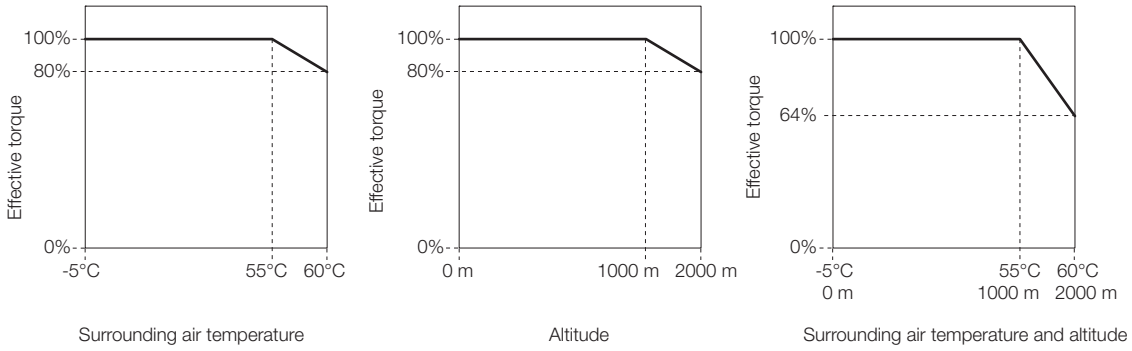

Surrounding air temperature

Altitude

Surrounding air temperature and altitude

Model Designations

SGD7W - 2R6 D A0 B

Σ-7 Series Σ-7W SERVOPACKs | 1st+2nd+3rd digits | 4th digit | 5th+6th digits | 7th digit | 8th+9th+10th digits

1st+2nd+3rd digits Maximum Applicable Motor Capacity per Axis

Voltage	Code	Specification
Three-phase, 400 VAC	2R6	0.75 kW
	5R4	1.5 kW

4th digit Voltage

Code	Specification
D	400 VAC

5th+6th digits Interface*2

Code	Specification
A0	EtherCAT communications reference

7th digit Design Revision Order

Code	Specification
B	Global Design Revision for 400V

8th+9th+10th digits Hardware Options Specification

Code	Specification	Applicable Models
-	Without options	400 V
026	With relay for holding brake	

Shaded items are non-stock

Ratings and Specifications

Ratings

◆ Three-phase, 400 VAC

Model SGD7W-			2R6D	5R4D
Maximum Applicable Motor Capacity per Axis [kW]			0.75	1.5
Continuous Output Current per Axis [Arms]			2.6	5.4
Instantaneous Maximum Output Current per Axis [Arms]			8.5	14
Main Circuit	Power Supply		Three-phase 380 VAC to 480 VAC, -15% to +10%, 50 Hz/60 Hz	
	Input Current [Arms]*		4.4	8.6
Control	Power Supply		24 VDC ±15%	
	Input Current [Arms]*		1.2	
Power Supply Capacity [kVA]*			3.5	6.8
Power Loss*	Main Circuit Power Loss [W]		65.4	108.6
	Control Circuit Power Loss [W]		21	
	Built-in Regenerative Resistor Power Loss [W]		28	28
	Total Power Loss [W]		114.4	157.6
Regenerative Resistor	Built-In Regenerative Resistor	Resistance [Ω]	43	43
		Capacity [W]	140	140
	Minimum Allowable External Resistance [Ω]		43	43
Overvoltage Category			III	

* This is the net value at the rated load.

◆ 540 VDC

Model SGD7W-		2R6D	5R4D
Maximum Applicable Motor Capacity per Axis [kW]		0.75	1.5
Continuous Output Current per Axis [Arms]		2.6	5.4
Instantaneous Maximum Output Current per Axis [Arms]		8.5	14
Main Circuit	Power Supply	513 VDC to 648 VDC, -15% to +10%	
	Input Current [Arms]*	5	11
Control	Power Supply	24 VDC ±15%	
	Input Current [Arms]*	1.2	
Power Supply Capacity [kVA]*		3.5	6.8
Power Loss*	Main Circuit Power Loss [W]	47.4	90.6
	Control Circuit Power Loss [W]	21	
	Total Power Loss [W]	68.4	111.6
Overvoltage Category		III	

* This is the net value at the rated load.

SERVOPACK Overload Protection Characteristics

The overload detection level is set for hot start conditions with a SERVOPACK surrounding air temperature of 55°C.

An overload alarm (A.710 or A.720) will occur if overload operation that exceeds the overload protection characteristics shown in the following diagram (i.e., operation on the right side of the applicable line) is performed.

The actual overload detection level will be the detection level of the connected SERVOPACK or Servo Motor that has the lower overload protection characteristics.

In most cases, that will be the overload protection characteristics of the Servo Motor.

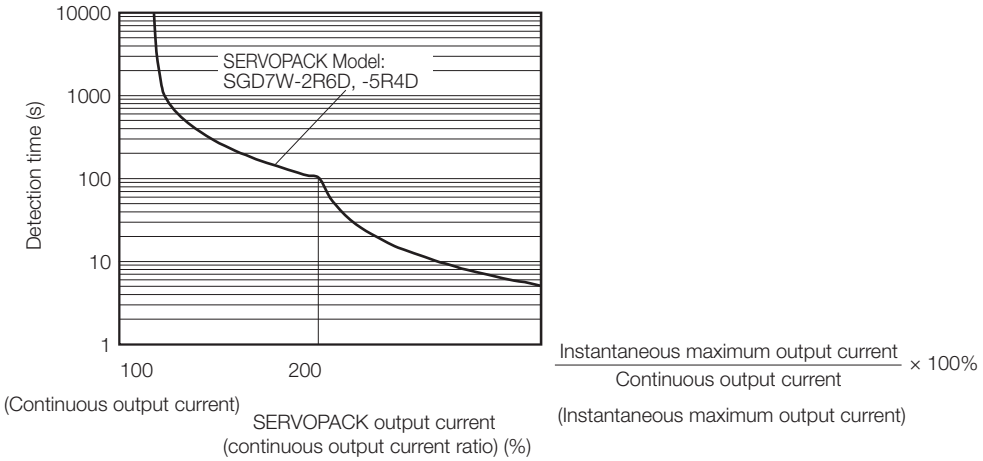

Note: The above overload protection characteristics do not mean that you can perform continuous duty operation with an output of 100% or higher.
For a Yaskawa-specified combination of SERVOPACK and Servo Motor, maintain the effective torque (or effective force) within the continuous duty zone of the torque-motor speed characteristic (or force-motor speed characteristics) of the Servo Motor.

Specifications

Item		Specification
Control Method		IGBT-based PWM control, sine wave current drive
Feedback	With Rotary Servo Motor	Serial encoder: 24 bits (incremental encoder/absolute encoder)
	With Linear Servo Motor	• Absolute linear encoder (The signal resolution depends on the absolute linear encoder.) • Incremental linear encoder (The signal resolution depends on the incremental linear encoder or Serial Converter Unit.)
Environmental Conditions	Surrounding Air Temperature	-5°C to 55°C With derating, usage is possible between 55°C and 60°C. Refer to the following section for derating specifications. ☞ *Specifications* (page 455)
	Storage Temperature	-20°C to 85°C
	Surrounding Air Humidity	95% relative humidity max. (with no freezing or condensation)
	Storage Humidity	95% relative humidity max. (with no freezing or condensation)
	Vibration Resistance	4.9 m/s^2
	Shock Resistance	19.6 m/s^2
	Degree of Protection	IP10
	Pollution Degree	2 • Must be no corrosive or flammable gases. • Must be no exposure to water, oil, or chemicals. • Must be no dust, salts, or iron dust.
	Altitude	1,000 m or less. With derating, usage is possible between 1,000 m and 2,000 m. Refer to the following section for derating specifications. ☞ *Specifications* (page 455)
	Others	Do not use the SERVOPACK in the following locations: Locations subject to static electricity noise, strong electromagnetic/magnetic fields, or radioactivity
Applicable Standards		UL 61800-5-1, CSA C22.2 No.274, EN50178, EN 61800-5-1, EN 55011 group 1 class A, EN 61000-6-2, EN 61000-6-4, and EN 61800-3
Mounting		Base-mounted
Performance	Speed Control Range	1:5000 (At the rated torque, the lower limit of the speed control range must not cause the Servo Motor to stop.)
	Coefficient of Speed Fluctuation*	±0.01% of rated speed max. (for a load fluctuation of 0% to 100%)
		0% of rated speed max. (for a voltage fluctuation of ±10%)
		±0.1% of rated speed max. (for a temperature fluctuation of 25°C ±25°C)
	Torque Control Precision (Repeatability)	±1%
	Soft Start Time Setting	0 s to 10 s (Can be set separately for acceleration and deceleration.)

Continued on next page.

Continued from previous page.

Item			Specification
I/O Signals	Linear Servo Motor Overheat Protection Signal Input		Number of input points: 1 Input voltage range: 0 V to +5 V
	Sequence Input Signals	Input Signals That Can Be Allocated	Allowable voltage range: 24 VDC ±20% Number of input points: 7
			Input method: Sink inputs or source inputs Input Signals • P-OT (Forward Drive Prohibit) and N-OT (Reverse Drive Prohibit) signals • /Probe1 (Probe 1 Latch Input) signal • /Probe2 (Probe 2 Latch Input) signal • /Home (Home Switch Input) signal • /P-CL (Forward External Torque Limit) and /N-CL (Reverse External Torque Limit) signals • /SI0 and /SI3 (General-Purpose Input) signals A signal can be allocated and the positive and negative logic can be changed.
	Sequence Output Signals	Fixed Output	Allowable voltage range: 5 VDC to 30 VDC Number of output points: 1 Output signal: Servo Alarm (ALM)
		Output Signals That Can Be Allocated	Allowable voltage range: 5 VDC to 30 VDC Number of output points: 5 (A photocoupler output (isolated) is used.)
			Output Signals • /COIN (Positioning Completion) signal • /V-CMP (Speed Coincidence Detection) signal • /TGON (Rotation Detection) signal • /S-RDY (Servo Ready) signal • /CLT (Torque Limit Detection) signal • /VLT (Speed Limit Detection) signal • /BK (Brake) signal • /WARN (Warning) signal • /NEAR (Near) signal • /ZONE0 (ZONE Signal 1 Output) signal • /ZONE1 (ZONE Signal 2 Output) signal • /ZONE2 (ZONE Signal 3 Output) signal • /ZONE3 (ZONE Signal 4 Output) signal • /nZONE (nZONE Output) signal A signal can be allocated and the positive and negative logic can be changed.
Communications	RS-422A Communications (CN3)	Interfaces	Digital Operator (JUSP-OP05A-1-E)
		1:N Communications	Up to N = 15 stations possible for RS-422A port
		Axis Address Settings	Set with parameters.
	USB Communications (CN7)	Interface	Personal Computer (with SigmaWin+) The software version of the SigmaWin+ must be version 7.11 or higher.
		Communications Standard	Conforms to USB2.0 standard (12 Mbps).
Displays/Indicators			CHARGE, PWR, RUN, ERR, and L/A (A and B) indicators, and one-digit seven-segment display

Continued on next page.

EtherCAT Communications Settings Switches	EtherCAT secondary address (S1 and S2), 16 positions

Continued from previous page.

Item		Specification
EtherCAT Communications	Applicable Communications Standards	IEC 61158 Type 12, IEC 61800-7 CiA402 Drive Profile
	Physical Layer	100BASE-TX (IEEE 802.3)
	Communications Connectors	CN6A (RJ45): EtherCAT signal input connector CN6B (RJ45): EtherCAT signal output connector
	Cable	Category 5, 4 shielded twisted pairs * The cable is automatically detected with AUTO MDIX.
	Sync Manager	SM0: Mailbox output, SM1: Mailbox input, SM2: Process data output, and SM3: Process data input
	FMMU	FMMU 0: Mapped in process data output (RxPDO) area. FMMU 1: Mapped in process data input (TxPDO) area. FMMU 2: Mapped to mailbox status.
	EtherCAT Commands (Data Link Layer)	APRD, FPRD, BRD, LRD, APWR, FPWR, BWR, LWR, ARMW, and FRMW (APRW, FPRW, BRW, and LRW commands are not supported.)
	Process Data	Assignments can be changed with PDO mapping.
	Mailbox (CoE)	Emergency messages, SDO requests, SDO responses, and SDO information (TxPDO/RxPDO and remote TxPDO/RxPDO are not supported.)
	Distributed Clocks	Free-Run Mode and DC Mode (Can be switched.) Applicable DC cycles: 125 µs to 4 ms in 125-µs increments
	Slave Information Interface	256 bytes (read-only)
	Indicators	EtherCAT communications in progress: Link/Activity x 2 EtherCAT communications status: RUN x 1 EtherCAT error status: ERR x 1
CiA402 Drive Profile		• Homing Mode • Profile Position Mode • Interpolated Position Mode • Profile Velocity Mode • Profile Torque Mode • Cyclic Synchronous Position Mode • Cyclic Synchronous Velocity Mode • Cyclic Synchronous Torque Mode • Touch Probe Function • Torque Limit Function
Analog Monitor (CN5)		Number of points: 2 Output voltage range: ±10 VDC (effective linearity range: ±8 V) Resolution: 16 bits Accuracy: ±20 mV (Typ) Maximum output current: ±10 mA Settling time (±1%): 1.2 ms (Typ)
Dynamic Brake (DB)		Activated when a servo alarm or overtravel (OT) occurs, or when the power supply to the main circuit or servo is OFF.
Regenerative Processing		Built-in
Overtravel (OT) Prevention		Stopping with dynamic brake, deceleration to a stop, or coasting to a stop for the P-OT (Forward Drive Prohibit) or N-OT (Reverse Drive Prohibit) signal
Protective Functions		Overcurrent, overvoltage, low voltage, overload, regeneration error, etc.
Utility Functions		Gain adjustment, alarm history, jogging, origin search, etc.
Safety Functions	Inputs	/HWBB_A1, /HWWB_A2, /HWWB_B1 and /HWBB_B2: Base block signals for Power Modules
	Outputs	EDM_A and EDM_B: Monitor the status of built-in safety circuits (fixed outputs).
	Applicable Standards	ISO13849-1 PLe (Category 3), IEC61508 SIL3
Option Module		Option Module Safety

*1. The coefficient of speed fluctuation for load fluctuation is defined as follows:

$$\text{Coefficient of speed fluctuation} = \frac{\text{No-load motor speed - Total-load motor speed}}{\text{Rated motor speed}} \times 100\%$$

*2. . Always perform risk assessment for the system and confirm that the safety requirements are met.

SERVOPACK External Dimensions

Front Cover Dimensions and Connector Specifications

The front cover dimensions and panel connectors depend on the SERVOPACK interface. Refer to the following figures.

Front Cover Dimensions (200V Models)

- Σ-7S Analog Voltage/Pulse Train Reference SERVOPACKs

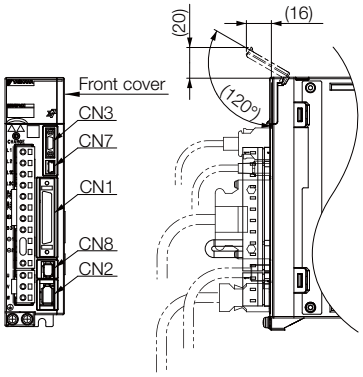

- Σ-7S MECHATROLINK-III Communications Reference SERVOPACKs

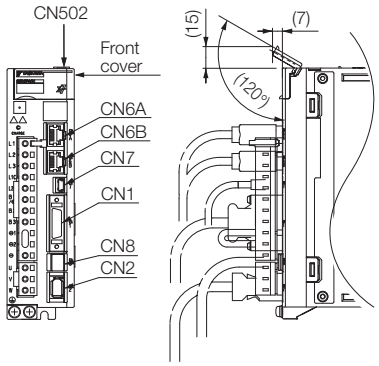

- Σ-7S EtherCAT Communications Reference SERVOPACKs

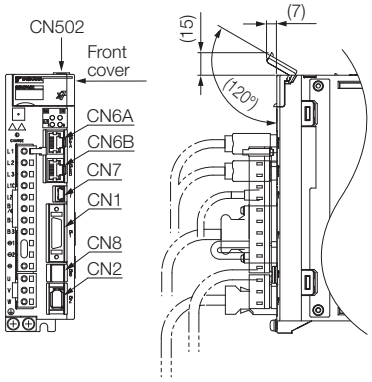

- Σ-7W MECHATROLINK-III Communications Reference SERVOPACKs

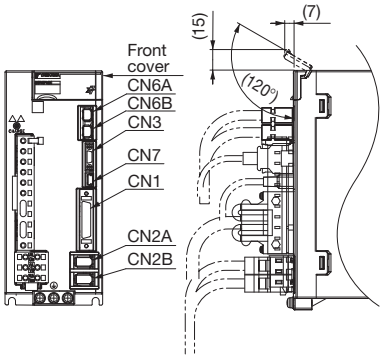

* A Command Option Module must be attached to the Command Option Attachable-Type SERVOPACK. To find the dimensions of the SERVOPACK with a Command Option Module attached, add the dimensions of the Command Option Module (refer to page 240 and following pages).

Connector Specifications (200V Models)

SERVOPACK	Connector No.	Model	Number of Pins	Manufacturer
Σ-7S Analog Voltage/Pulse Train Reference SERVOPACK	CN1	10250-59A3MB	50	3M Japan Ltd.
	CN2	3E106-0220KV	6	3M Japan Ltd.
	CN3	HDR-EC14LF-DTN-SLD-PLUS	14	Honda Tsushin Kogyo Co., Ltd.
	CN7	2172034-1	5	Tyco Electronics Japan G.K.
	CN8	1981080-1	8	Tyco Electronics Japan G.K.
Σ-7S MECHATROLINK-III Communications Reference SERVOPACK	CN1	10226-59A3MB	26	3M Japan Ltd.
	CN2	3E106-0220KV	6	3M Japan Ltd.
	CN502	S8B-ZR-SM4A-TF (LF)(SN)	8	J.S.T. Mfg. Co., Ltd.
	CN6A, CN6B	1-1734579-4	8	Tyco Electronics Japan G.K.
	CN7	2172034-1	5	Tyco Electronics Japan G.K.
	CN8	1981080-1	8	Tyco Electronics Japan G.K.
Σ-7S EtherCAT Communications Reference SERVOPACK	CN1	10226-59A3MB	26	3M Japan Ltd.
	CN2	3E106-0220KV	6	3M Japan Ltd.
	CN502	S8B-ZR-SM4A-TF (LF)(SN)	8	J.S.T. Mfg. Co., Ltd.
	CN6A, CN6B	1903815-1	8	Tyco Electronics Japan G.K.
	CN7	2172034-1	5	Tyco Electronics Japan G.K.
	CN8	1981080-1	8	Tyco Electronics Japan G.K.
Σ-7W MECHATROLINK-III Communications Reference SERVOPACK	CN1	10236-59A3MB	36	3M Japan Ltd.
	CN2A, CN2B	3E106-2230KV	6	3M Japan Ltd.
	CN3	HDR-EC14LF-DTN-SLD-PLUS	14	Honda Tsushin Kogyo Co., Ltd.
	CN6A, CN6B	1981386-1	8	Tyco Electronics Japan G.K.
	CN7	2172034-1	5	Tyco Electronics Japan G.K.

Note: The above connectors or their equivalents are used for the SERVOPACKs.

Front Cover Dimensions (400V Models)

- Σ-7S MECHATROLINK-III and EtherCAT Reference SERVOPACKs

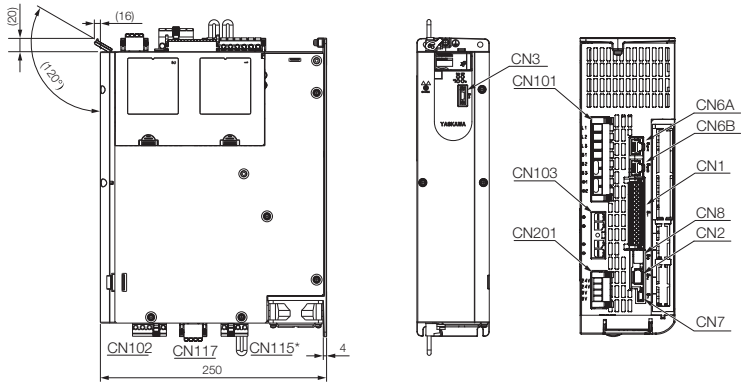

- Σ-7W MECHATROLINK-III and EtherCAT Communications Reference SERVOPACKs

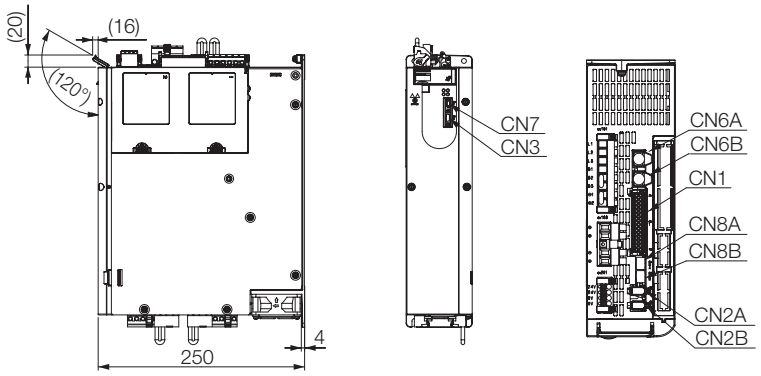

Unit: mm

* Dynamic Brake Connector only for SGD7S-1R9D up to -170D.

Connector Specifications (400V Models)

SERVO-PACK	Connec-tor No.	Function	Model	Yaskawa Order Code	No. of Pins	Manufacturer
Σ-7S MECHATROLINK-III or EtherCAT Communications Reference	CN1	I/O Connector	DFMC1,5/15-ST-3,5-LRBK	JUSP-7CN001	30	Phoenix Contact
	CN2	Encoder Connector	-	JZSP-CMP9-1-E	6	Sumitomo 3M Ltd
	CN3	Digital Operator	-	-	14	Honda Tsushin Kogyo Co., Ltd
			-			
	CN6A/ CN6B	Fieldbus Connector	-	-	8	Tyco Electronics Japan G.K
	CN7	SigmaWin USB Connector	-	-	5	
	CN8	Safety Connector Kit	-	2013595-1	8	
		Safety Jumper Connector	-	JZSP-CVH05-E	8	
	CN101	Main Power Connector SGD7S-1R9D to -170D	BLZ 7.62HP/08/180LR SN BK BX PRT	JUSP-7CN101	8	Weidmüller
		Main Power Connector SGD7S-210D to -370D	BUZ 10.16HP/07/180F AG BK BX LPR SO	JUSP-7CN101-1	7	
	CN102	Motor Power Connector SGD7S-1R9D to -170D	BLZ 7.62IT/04/180MF4 SN BK BX PRT	JUSP-7CN102	4	
		Motor Power Connector SGD7S-210D to -370D	BUZ 10.16IT/04/180MF4 AG BK BX LPR SO	JUSP-7CN102-1	4	
	CN103	DC Power Input SGD7S-1R9D to -170D	BVZ 7.62IT/04/180MF3 SN BK BX PRT	JUSP-7CN103	4	
		DC Power Input SGD7S-210D to -370D	BUZ 10.16IT/04/180MF3 AG BK BX LPR SO	JUSP-7CN103-1	4	
	CN115	Dynamic Brake Connector SGD7S-1R9D to -170D	BLZ 7.62IT/03/180MF2 SN BK BX PRT	JUSP-7CN115	3	
		Dynamic Brake Connector SGD7S-210D to -370D	No integrated Dynamic Brake circuit. External Dynamic Brake circuit possible as option.			
	CN117	Holding Brake Connector	BLF 5.08HC/04/180LR SN BK BX SO	JUSP-7CN117	4	Weidmüller
	CN201	24V Control Power Input	BLF 5.08HC/04/180LR SN OR BX SO	JUSP-7CN201	4	
Σ-7S MECHATROLINK-III or EtherCAT Communications Reference	CN1	I/O Connector	DFMC1,5/15-ST-3,5-LRBK	JUSP-7CN001	30	Phoenix Contact
	CN2A/ CN2B	Encoder Connector Axis A Encoder Connector Axis B	-	JZSP-CMP9-1-E	6	Sumitomo 3M Ltd
	CN3	Digital Operator	-	-	14	Honda Tsushin Kogyo Co., Ltd.
	CN6A/ CN6B	Fieldbus Connector	-	-	8	Tyco Electronics Japan G.K.
	CN7	SigmaWin USB Connector	-	-	5	
	CN8A	Safety Connector Kit	-	2013595-1	8	
		Safety Jumper Connector	-	JZSP-CVH05-E		
	CN8B	Safety Connector Kit	-	2013595-1	8	
		Safety Jumper Connector	-	JZSP-CVH05-E		
	CN101	Main Power Connector	BLZ 7.62HP/08/180LR SN BK BX PRT	JUSP-7CN101	8	Weidmüller
	CN102A/ CN102B	Motor Power Connector Axis A/ Motor Power Connector Axis B	BLZ 7.62IT/04/180MF4 SN BK BX PRT	JUSP-7CN102	4	
	CN103	DC Power Input	BVZ 7.62IT/04/180MF3 SN BK BX PRT	JUSP-7CN103	4	
	CN115A/ CN115B	DB Connector Axis A / DB Connector Axis B	BLZ 7.62IT/03/180MF2 SN BK BX PRT	JUSP-7CN115	3	
	CN117	Holding Brake Connector	BLF 5.08HC/04/180LR SN BK BX SO	JUSP-7CN117	4	
	CN201	24V Control Power Input	BLF 5.08HC/04/180LR SN OR BX SO	JUSP-7CN201	4	

Note: The above connectors or their equivalents are used for the SERVOPACKs.

SERVOPACK External Dimensions

Σ-7S SERVOPACKs: Analog/Pulse & Command Option Type (100/200V)

All of the dimensional drawings show Analog Voltage/Pulse Train Reference SERVOPACKs as typical examples.

◆ Three-phase, 200 VAC: SGD7S-R70A, -R90A, and -1R6A
Single-phase, 100 VAC: SGD7S-R70F, -R90F

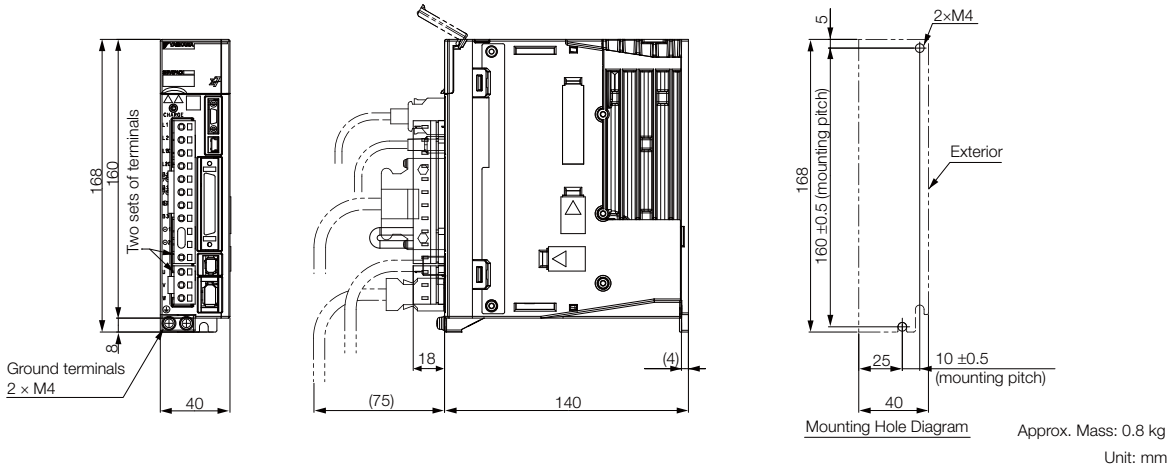

Approx. Mass: 0.8 kg
Unit: mm

◆ Three-phase, 200 VAC: SGD7S-2R8A
Single-phase, 100 VAC: SGD7S-2R1F

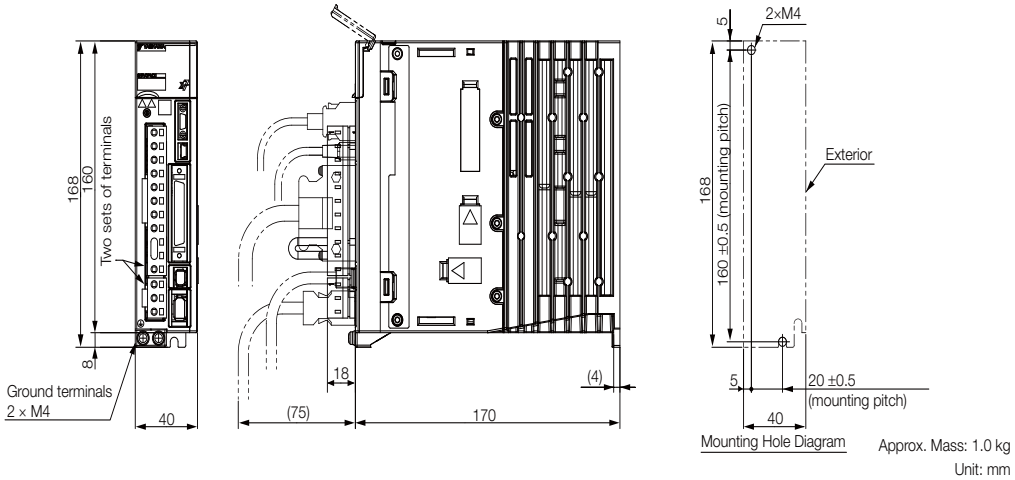

Approx. Mass: 1.0 kg
Unit: mm

◆ Three-phase, 200 VAC: SGD7S-3R8A, -5R5A, and -7R6A
Single-phase, 100 VAC: SGD7S-2R8F

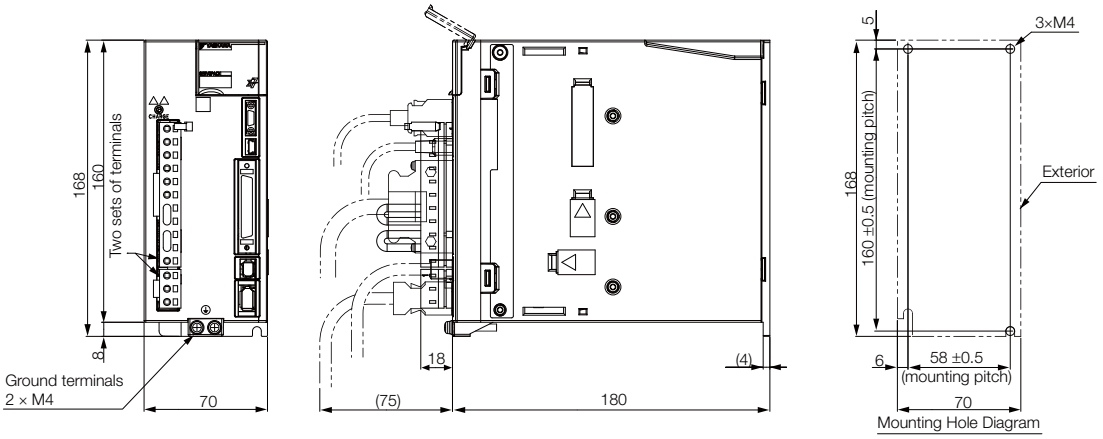

Approx. Mass: 1.6 kg
Unit: mm

◆ Three-phase, 200 VAC: SGD7S-120A

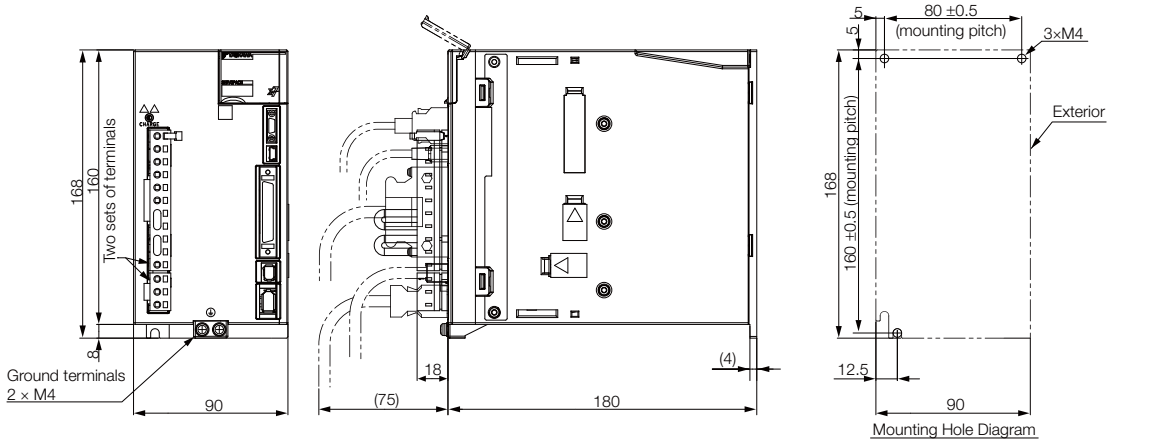

Approx. Mass: 2.2 kg
Unit: mm

◆ Three-phase, 200 VAC: SGD7S-180A and -200A

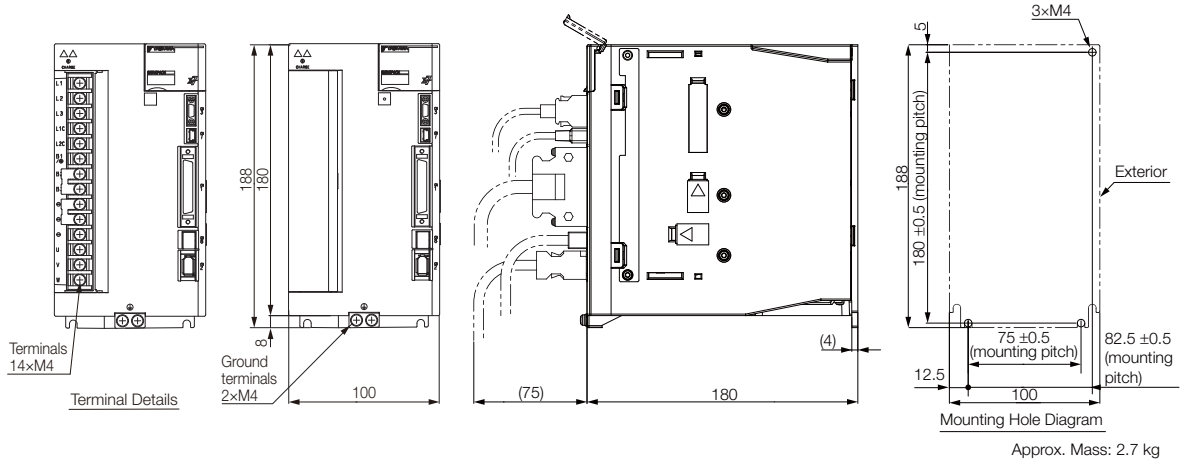

Approx. Mass: 2.7 kg
Unit: mm

◆ Three-phase, 200 VAC: SGD7S-330A

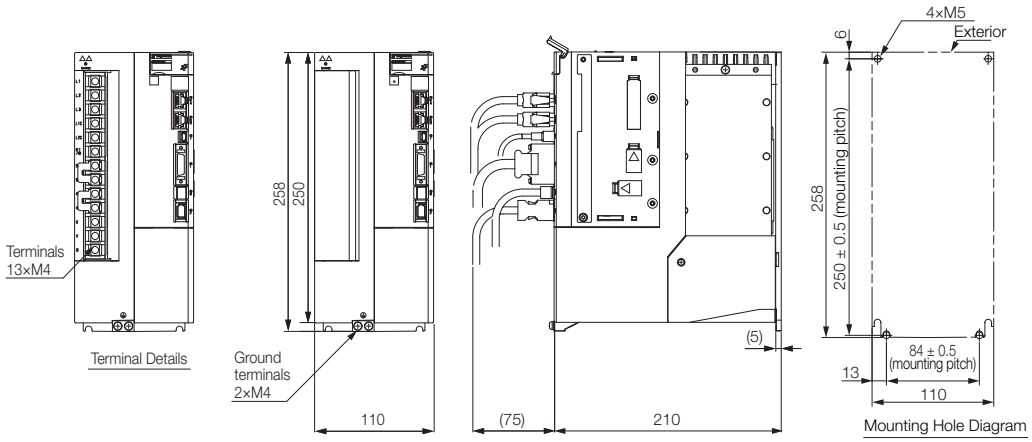

Approx. Mass: 4.4 kg
Unit: mm

◆ Three-phase, 200 VAC: SGD7S-470A and -550A

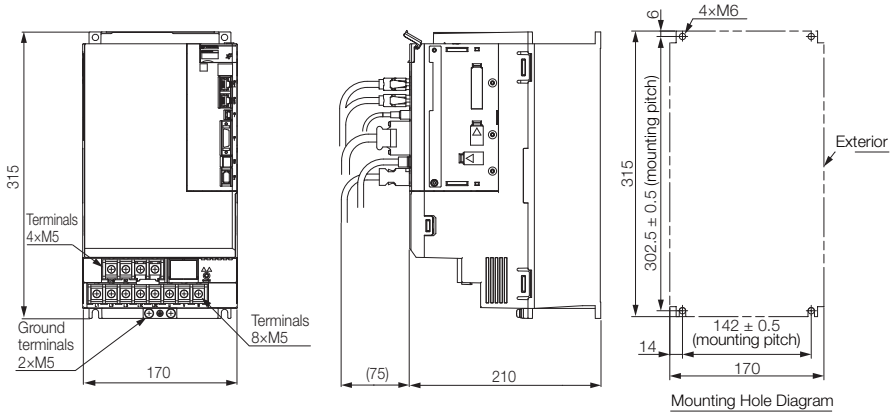

Approx. Mass: 8.2 kg
Unit: mm

◆ Three-phase, 200 VAC: SGD7S-590A and -780A

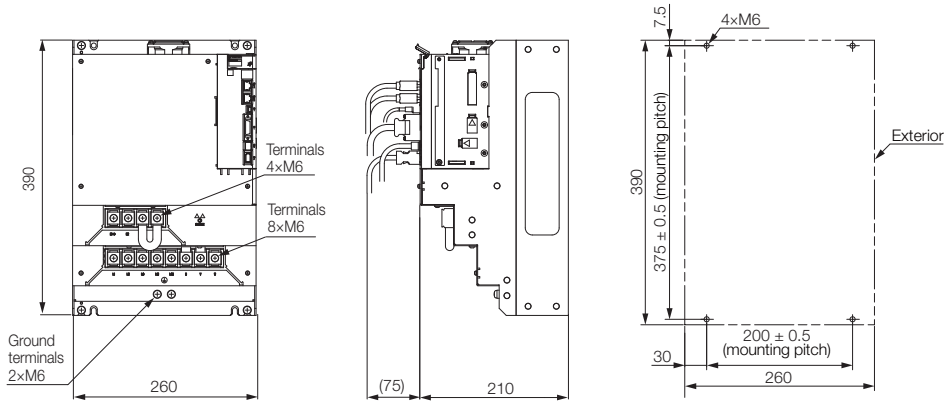

Approx. Mass: 15.5 kg
Unit: mm

Σ-7S SERVOPACKs: MECHATROLINK-III & EtherCAT Type (100/200V)

All of the dimensional drawings show MECHATROLINK-III Reference SERVOPACKs as typical examples.

◆ Three-phase, 200 VAC: SGD7S-R70A, -R90A, and -1R6A
Single-phase, 100 VAC: SGD7S-R70F, -R90F

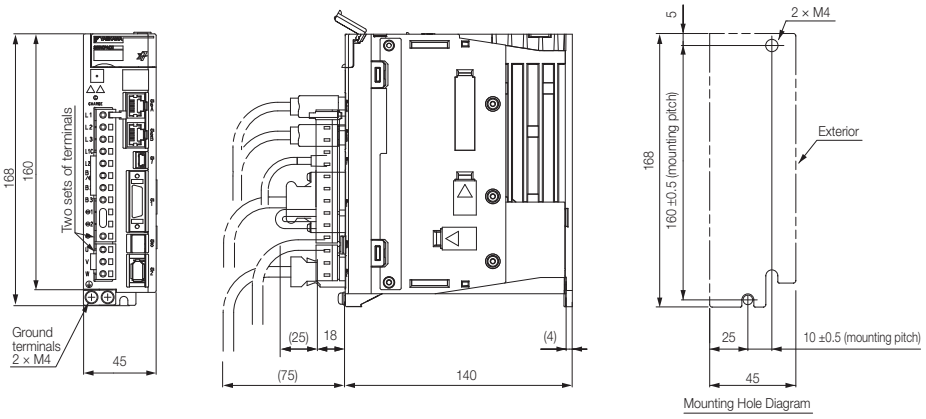

Approx. mass: 0.8 kg
Unit: mm

◆ Three-phase, 200 VAC: SGD7S-2R8A
Single-phase, 100 VAC: SGD7S-2R1F

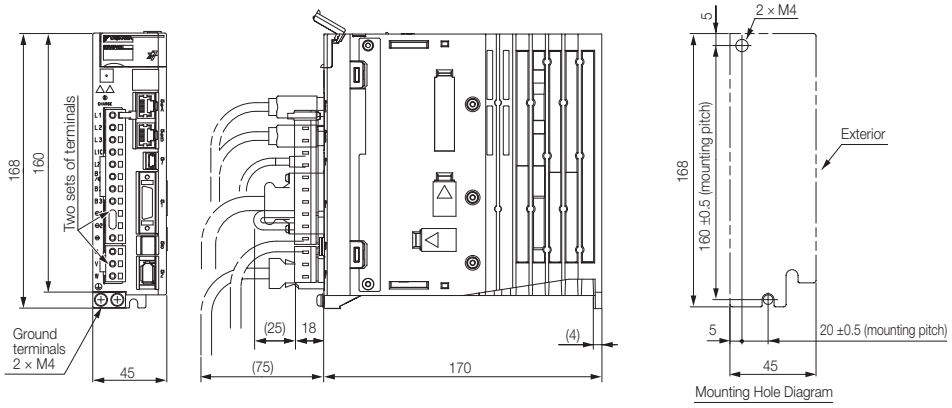

Approx. mass: 1.0 kg
Unit: mm

◆ Three-phase, 200 VAC: SGD7S-3R8A, -5R5A, and -7R6A
Single-phase, 100 VAC: SGD7S-2R8F

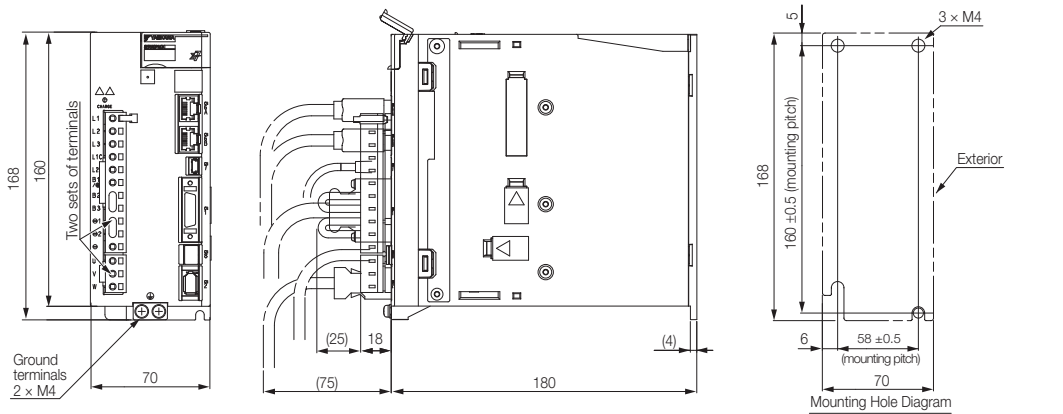

Approx. mass: 1.6 kg
Unit: mm

◆ Three-phase, 200 VAC: SGD7S-120A

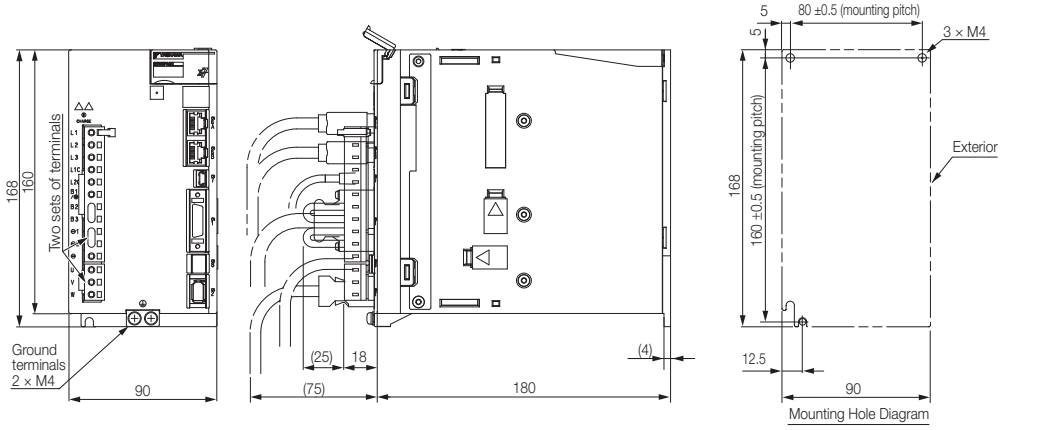

Approx. mass: 2.2 kg
Unit: mm

◆ Three-phase, 200 VAC: SGD7S-180A and -200A

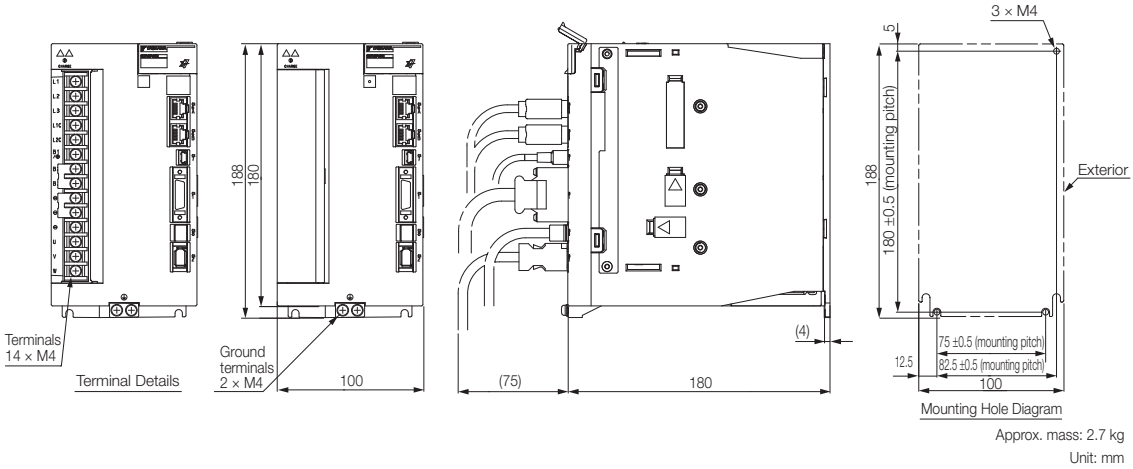

Approx. mass: 2.7 kg
Unit: mm

◆ Three-phase, 200 VAC: SGD7S-330A

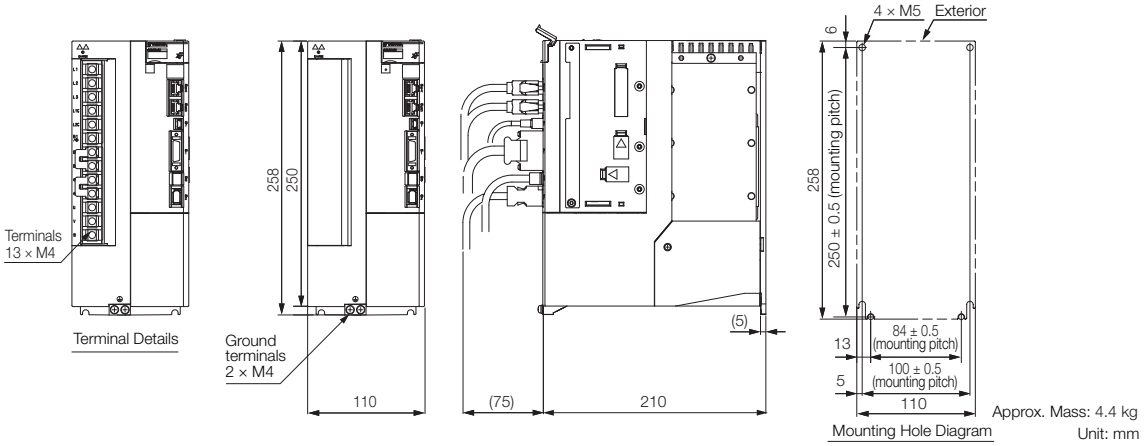

Approx. Mass: 4.4 kg
Unit: mm

◆ Three-phase, 200 VAC: SGD7S-470A and -550A

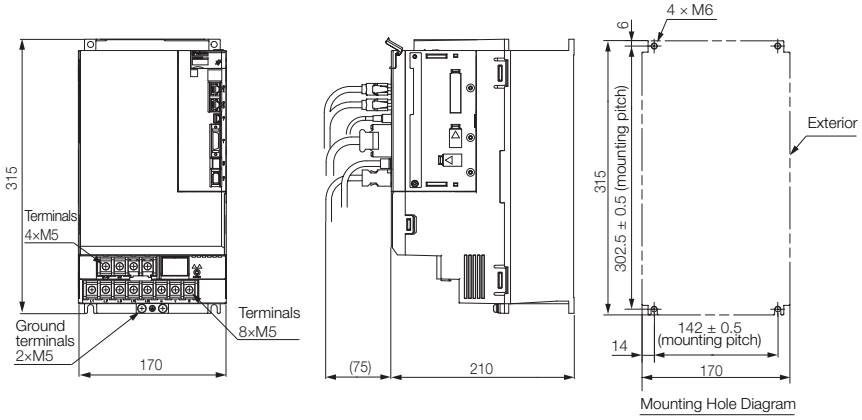

Approx. Mass: 8.2 kg
Unit: mm

◆ Three-phase, 200 VAC: SGD7S-590A and -780A

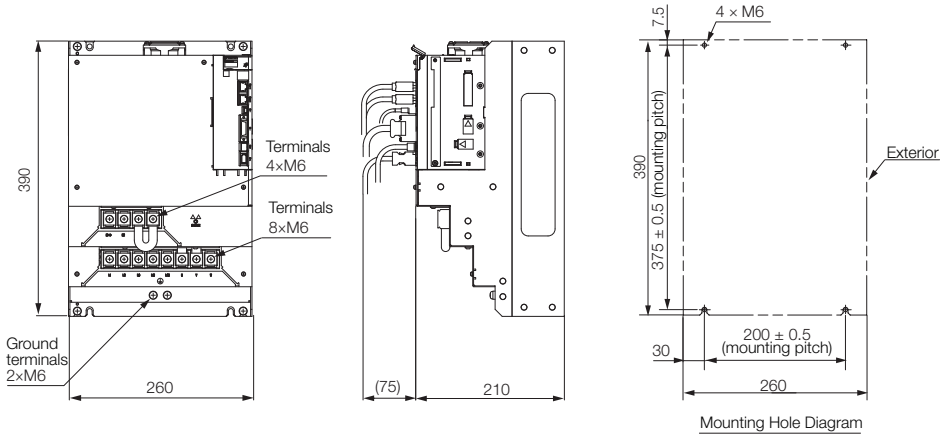

Approx. Mass: 15.5 kg
Unit: mm

Σ-7S SERVOPACKs: MECHATROLINK-III and EtherCAT Type (400 V)

All of the dimensional drawings show MECHATROLINK-III Reference SERVOPACKs as typical examples.

◆ Three-phase, 400 VAC: SGD7S-1R9D, -3R5D, -5R4D, -8R4D, and -120D

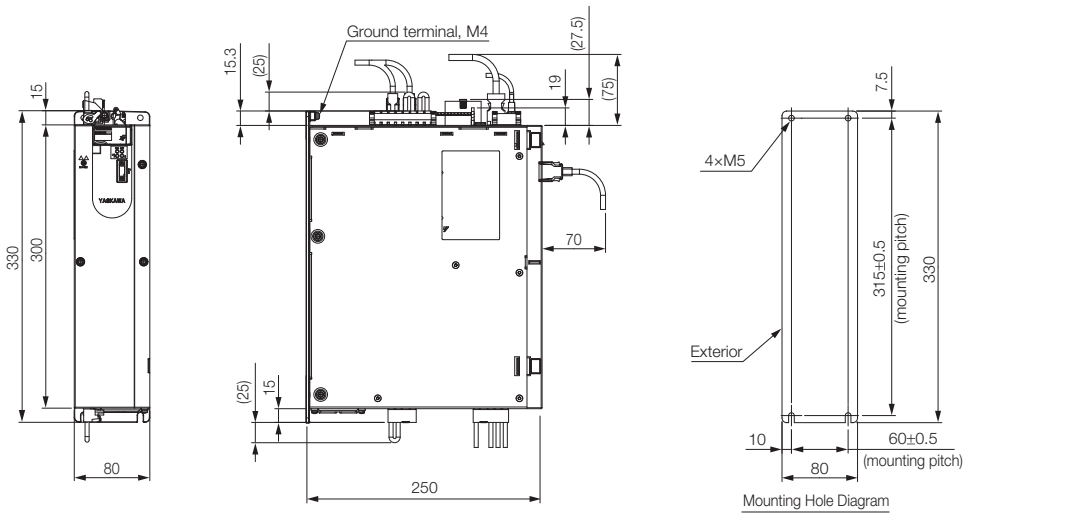

Approx. mass: SGD7S-1R9D, -3R5D, or -5R4D: 3.4 kg
SGD7S-8R4D or -120D: 3.7 kg
Unit: mm

◆ Three-phase, 400 VAC: SGD7S-170D

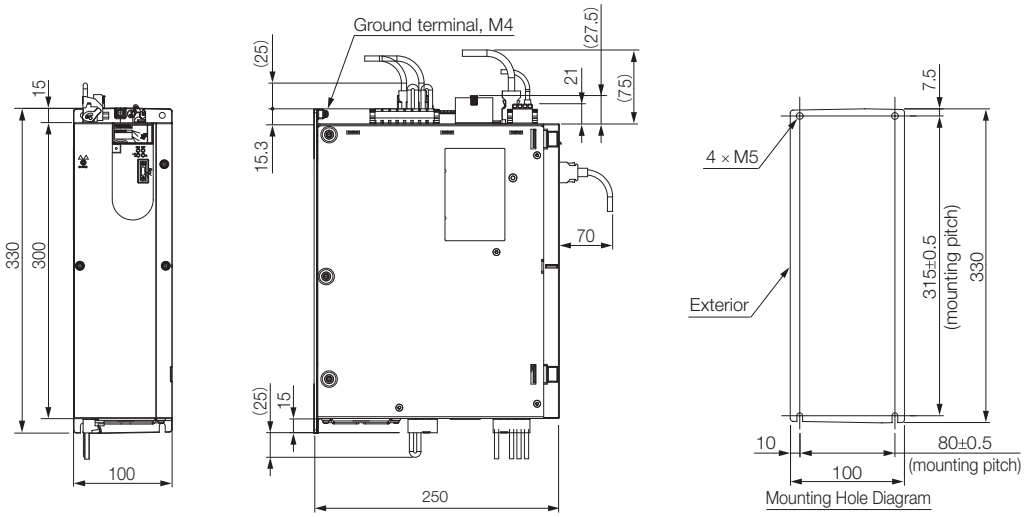

Approx. mass: 5.5 kg
Unit: mm

◆ Three-phase, 400 VAC: SGD7S-210D and -260D

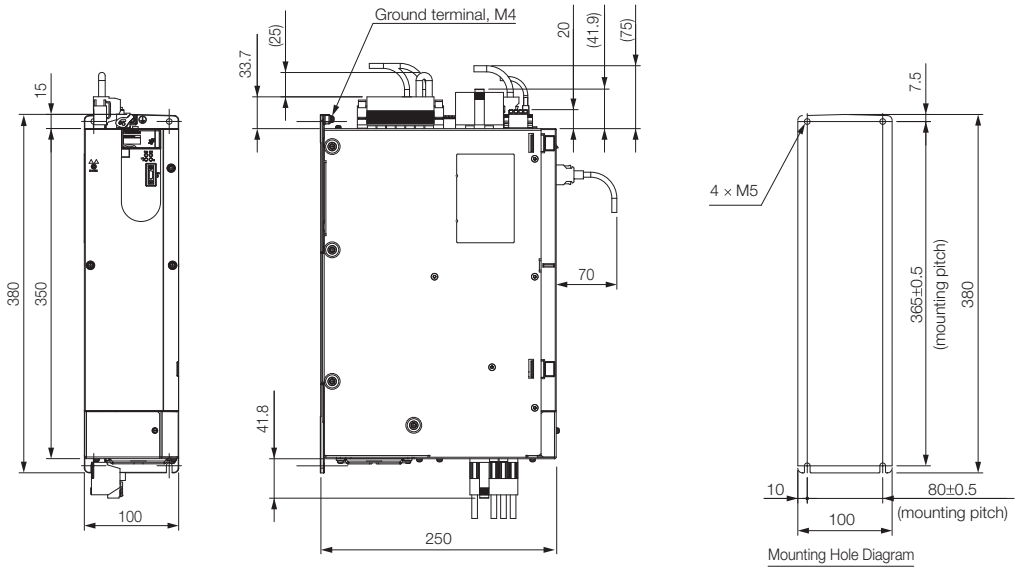

Approx. mass: 7.0 kg
Unit: mm

◆ Three-phase, 400 VAC: SGD7S-280D and -370D

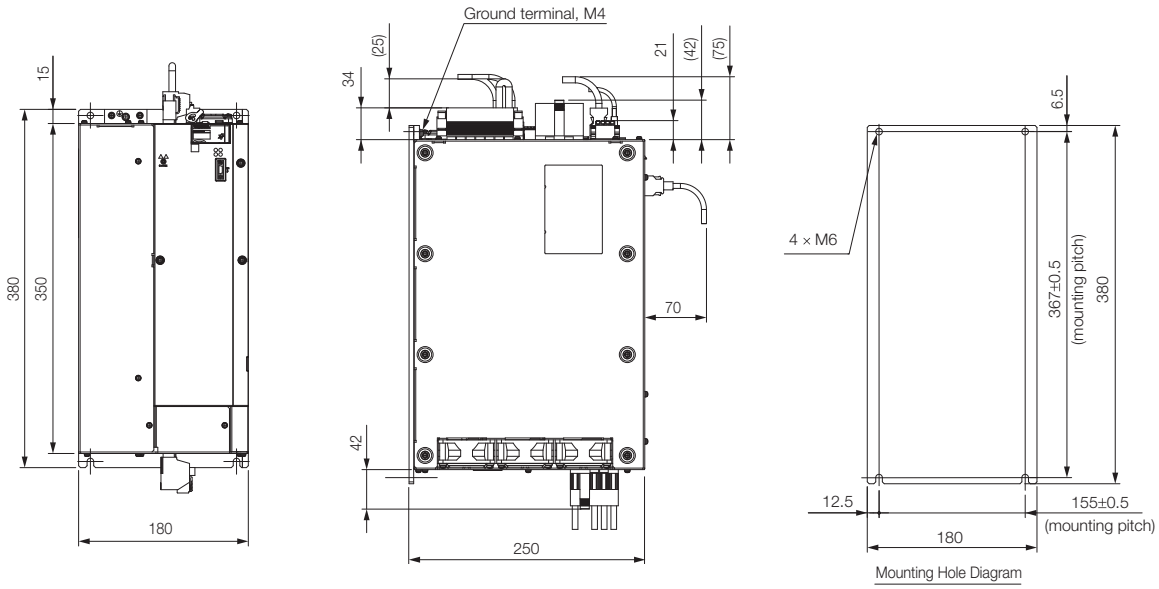

Approx. mass: 13.5 kg
Unit: mm

Σ-7W SERVOPACKs: MECHATROLINK-III (200 V)

◆ Three-phase, 200 VAC: SGD7W-1R6A and -2R8A

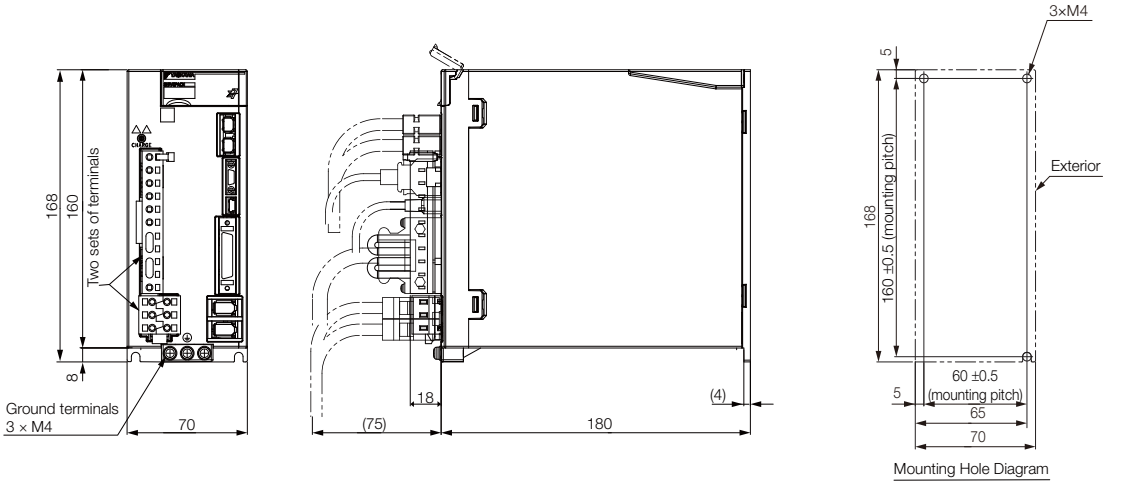

Approx. Mass: 1.6 kg
Unit: mm

◆ Three-phase, 200 VAC: SGD7W-5R5A and -7R6A

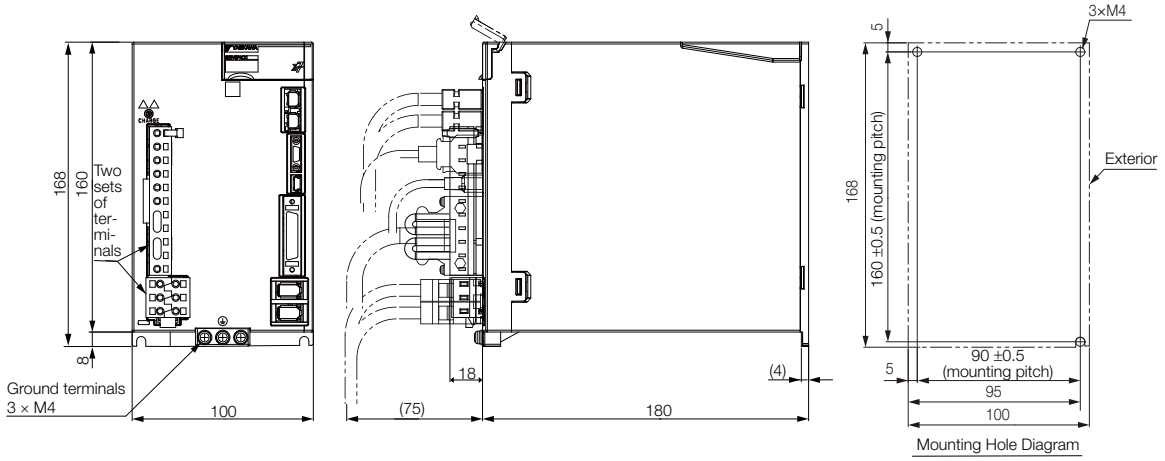

Approx. Mass: 2.3 kg
Unit: mm

Σ-7W SERVOPACKs: MECHATROLINK-III and EtherCAT Type (400 V)

◆ Three-phase, 400 VAC: SGD7W-2R6D and -5R4D

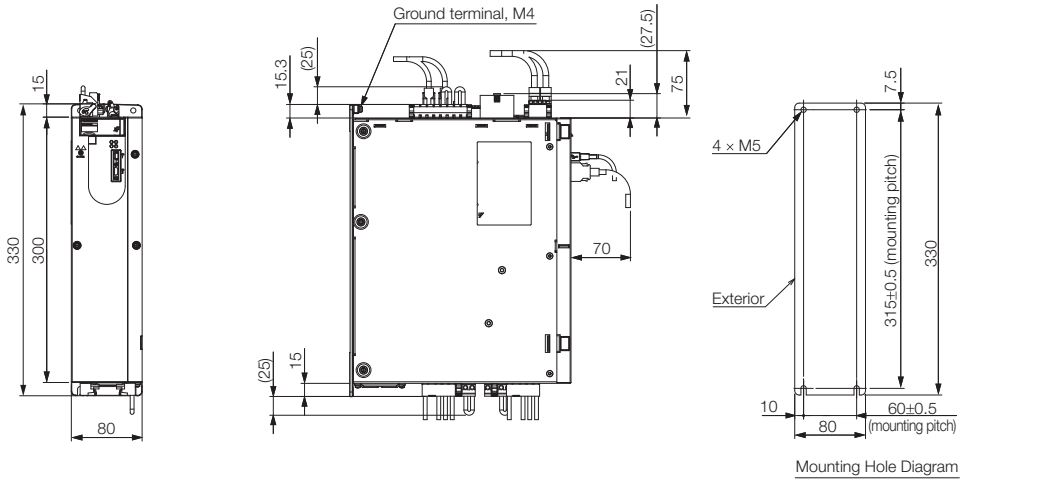

Mounting Hole Diagram

Approx. mass: 2R6D: 4.1 kg
5R4D: 4.3 kg

Unit: mm

Additional SERVOPACK Options

Feedback Option 474

Safety Option 480

Sigma-7Siec Option 484

MP2600iec Option 486

SigmaLogic7 Compact Option 494

FT19 Option - Less Deviation Control 496

FT79 Option - Built-in Indexer 498

FT81 Option - Harmonic Drive SHA Actuators 500

FT82/83 Option - for SGM7D Direct Drive Motor ..502

Feedback Option

Fully-Closed Loop Option

With fully-closed control, an externally installed encoder is used to detect the position of the controlled machine and the machine's position information is fed back to the SERVOPACK. High-precision positioning is possible because the actual machine position is fed back directly. To perform fully-closed loop control, the fully closed loop option must be selected.

SERVOPACK Designations

◆ Purchasing a SERVOPACK with the fully closed loop option

To order SERVOPACKs with the fully-closed loop option, use the following model numbers.

SGD7S *1 | R70 | A | 00 | A | 000 | 001

- SGD7S: Σ-7 Series, Σ-7S Models
- R70: 1st+2nd+3rd digits
- A: 4th digit
- 00: 5th+6th digits
- A: 7th digit
- 000: 8th+9th+10th digits
- 001: 11th+12th+13th digits

1st+2nd+3rd digits Maximum Applicable Motor Capacity

Voltage	Code	Specification
Three-phase, 200 VAC	R70*2	0.05 kW
	R90*2	0.1 kW
	1R6*2	0.2 kW
	2R8*2	0.4 kW
	3R8	0.5 kW
	5R5*2	0.75 kW
	7R6	1.0 kW
	120	1.5 kW
	180	2.0 kW
	200	3.0 kW
	330	5.0 kW
	470	6.0 kW
	550	7.5 kW
	590	11 kW
	780	15 kW
Single-phase, 100 VAC	R70	0.05 kW
	R90	0.1 kW
	2R1	0.2 kW
	2R8	0.4 kW

4th digit Voltage

Code	Specification
A	200 VAC
F	100 VAC

5th+6th digits Interface

Code	Specification
00	Analog voltage/pulse train reference
30	MECHATROLINK-III communications reference
A0	EtherCAT communications reference

7th digit Design Revision Order

A: Global design revision

8th+9th+10th digits Hardware Options Specification

Code	Specification	Applicable Models
000	Without options	All models

11th+12th+13th digits Option Module

Code	Specification
001	Fully-Closed Module

*1. The model number of a SERVOPACK with an Option is not hyphenated after SGD7S.

*2. You can use these models with either a single-phase or three-phase power supply input.

System Configuration

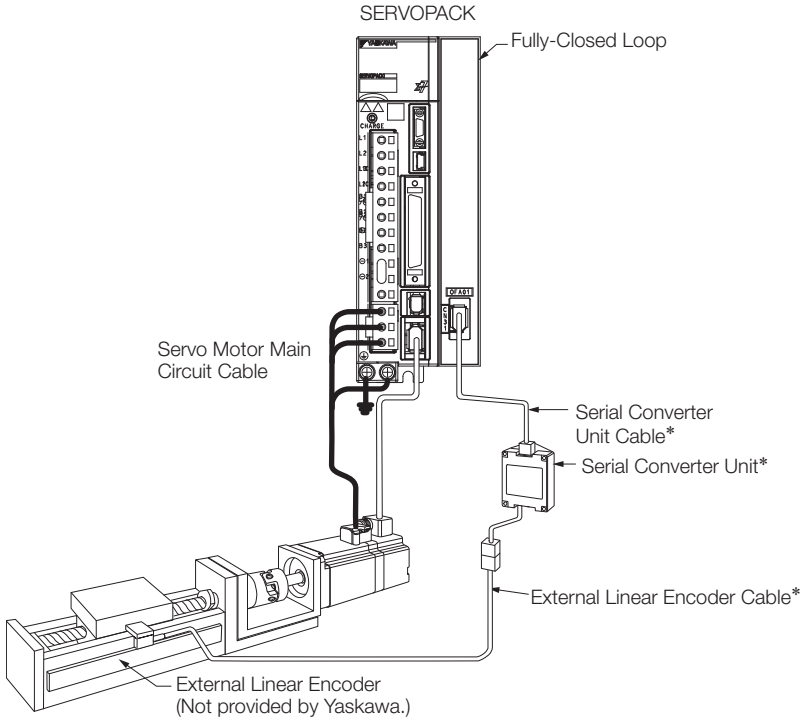

* The connected devices and cables depend on the type of external Linear Encoder that is used.

Note: Refer to the following section for information on peripheral devices.

☞ *Peripheral Devices* (page 300)

◆ Connections to Linear Encoder from Heidenhain Corporation

■ Connections for a 1 Vp-p Analog Voltage Output Signal

You must make the connections through a Yaskawa Serial Converter Unit. The output signal will be multiplied by 8 bits (256 divisions) in the Serial Converter Unit.

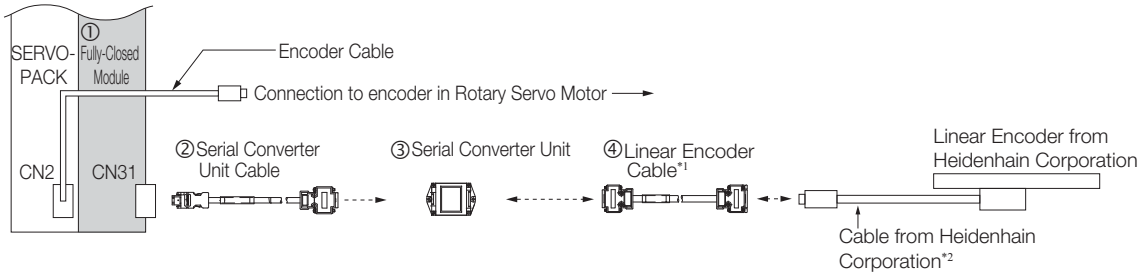

*1. When using a JZDP-J00□-□□□ Serial Converter Unit, do not use a Yaskawa Linear Encoder Cable that is longer than 3 m.

*2. Contact Heidenhain Corporation for details on cables (analog 1 Vp-p output, D-sub 15-pin, male) from Heidenhain Corporation.

No.	Item	Model	Reference
②	Serial Converter Unit Cable	JZSP-CLP70-□□-E	page 298
③	Serial Converter Unit	JZDP-D003-000	page 301
④	Linear Encoder Cable	JZSP-CLL30-□□-E	page 281

Note: 1. Refer to the following section for recommended Linear Encoders.
☞ *Recommended Linear Encoders* (page M-11)

2. Refer to the following manual for the specifications of the Serial Converter Units.
🕮 *Σ-7-Series AC Servo Drive Peripheral Device Selection Manual* (Manual No.: SIEP S800001 32)

3. Refer to the following section for information on Servo Motor Main Circuit Cables and Encoder Cables.
☞ *Cables and Peripheral Devices* (page 253)

■ Connections When Using a Yaskawa Serial Interface for the Output Signals

• LIC4100 Linear Encoder with EIB3391Y Interpolator

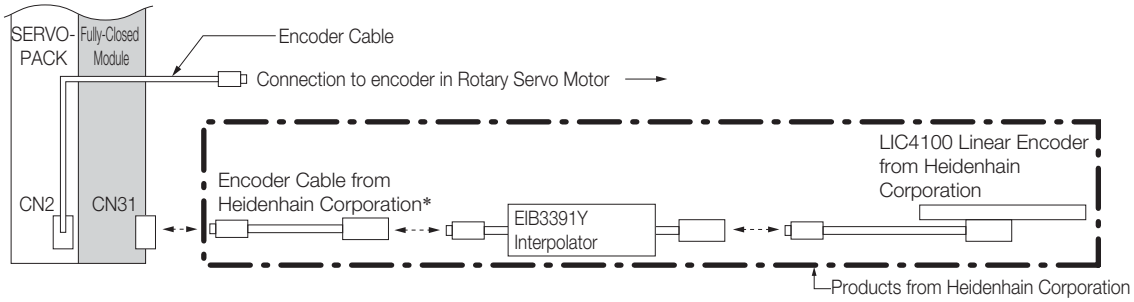

* Use an Encoder Cable from Heidenhain Corporation. Contact Heidenhain Corporation for detailed Encoder Cable specifications.

◆ Connections to Linear Encoder from Renishaw Plc

■ Connections for a 1 Vp-p Analog Voltage Output Signal

You must make the connections through a Yaskawa Serial Converter Unit. The output signal will be multiplied by 8 bits (256 divisions) in the Serial Converter Unit.

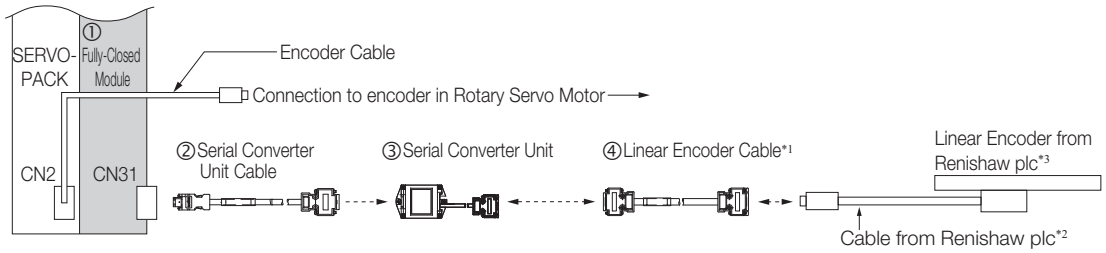

*1. When using a JZDP-J00□-□□□ Serial Converter Unit, do not use a Yaskawa Linear Encoder Cable that is longer than 3 m.

*2. Contact Renishaw plc for details on cables (analog 1 Vp-p output, D-sub 15-pin, male) from Renishaw plc. However, the BID and DIR signals are not connected.

*3. If you use the origin signals with a Linear Encoder from Renishaw plc, the origin may sometimes be falsely detected. If that occurs, use the BID/DIR signal to output the origin signal only in one direction.

No.	Item	Model	Reference
②	Serial Converter Unit Cable	JZSP-CLP70-□□-E	page 281
③	Serial Converter Unit	JZDP-D005-000	page 284
④	Linear Encoder Cable	JZSP-CLL00-□□-E	page 281

Note: 1. Refer to the following section for recommended Linear Encoders.
☞ *Recommended Linear Encoders* (page M-11)

2. Refer to the following manual for the specifications of the Serial Converter Units.
🕮 *Σ-7-Series AC Servo Drive Peripheral Device Selection Manual* (Manual No.: SIEP S800001 32)

3. Refer to the following section for information on Servo Motor Main Circuit Cables and Encoder Cables.
☞ *Cables and Peripheral Devices* (page 253)

◆ Connections to Linear Encoder from Magnescale Co., Ltd.

■ SL7□ 0 Linear Encoder and PL101-RY Sensor Head with Interpolator

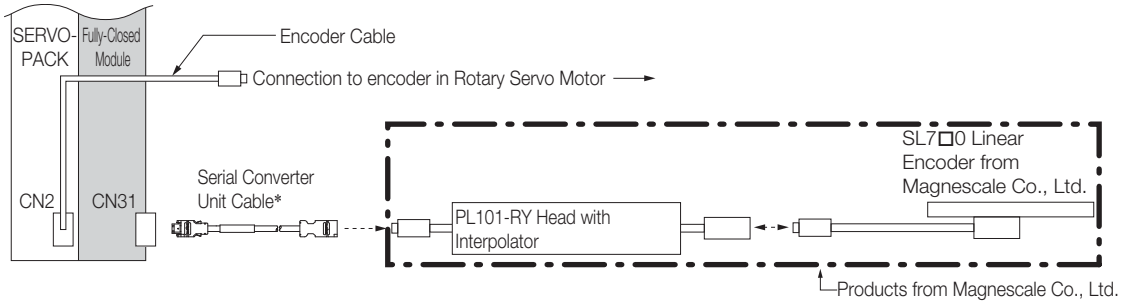

* Refer to the following section for information on cables to connect Fully-Closed Loop and Linear Encoders.
☞ *Serial Converter Unit Cables* **(page 281)**

■ SR-75, SR-77, SR-85, and SR-87 Linear Encoders

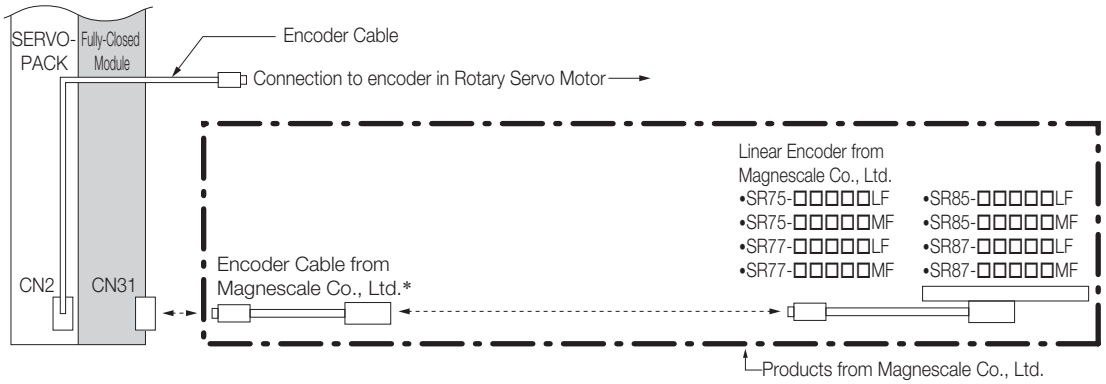

* To connect the SERVOPACK and Linear Encoder, use a CH33-xx□□G Cable from Magnescale Co., Ltd. (This Cable has connectors designed for use with Yaskawa products.)

■ RU77-4096ADF/RU77-4096AFFT01 Absolute Rotary Encoders

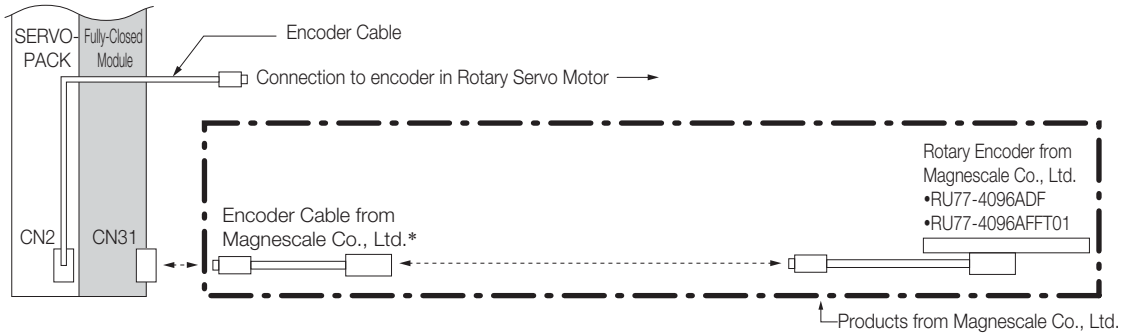

* To connect the SERVOPACK and Rotary Encoder, use a CE28-Series Extension Cable for RU77 from Magnescale Co., Ltd.

Note: The RU77 is a single-turn absolute rotary encoder.

◆ Connections to Linear Encoders from Mitutoyo Corporation

■ ST78□ A Linear Encoders

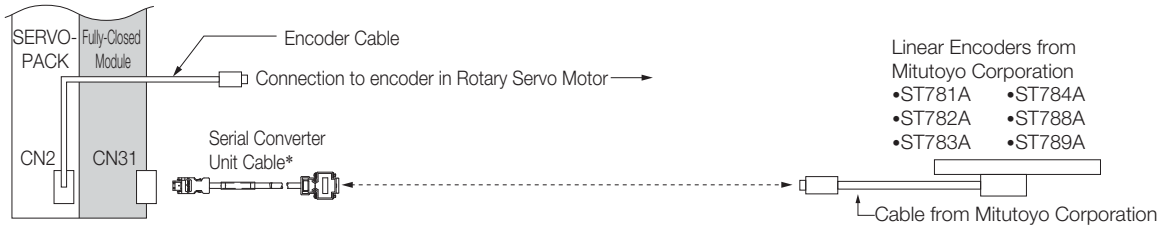

* Refer to the following section for information on cables to connect Fully-Closed Loop and Linear Encoders.
☞ *Serial Converter Unit Cables* **(page 281)**

External Dimensions

Refer to pages 234 for the external dimensions of the individual SERVOPACKs.

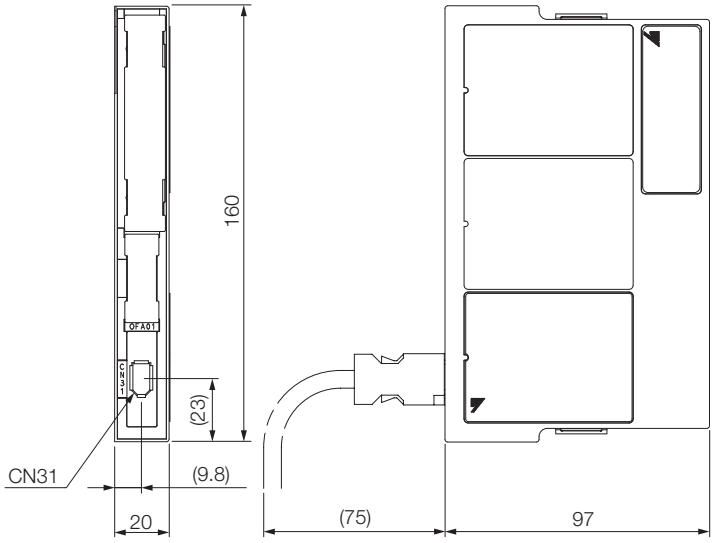

Unit: mm
Approx. Mass: 0.1 kg

Connectors

Device Label	Model	Number of Pins	Manufacturer
CN31	3E106-0220KV	6	3M Japan Ltd.

Note: The above connectors or their equivalents are used for the Fully-Closed Option.

Safety Option

Advanced Safety Option

This advanced safety option implements safety functions that conform to EN ISO 13849-1 (the harmonized EU Machinery Directive) and are specified in the individual IEC 61800-5-2 standard. The advanced safety option for the SGD7S SERVOPACK is designed to optimize safety in a machine system according to industry needs.

SERVOPACK Designations

◆ Purchasing a SERVOPACK with the advanced safety option

To order SERVOPACKs with the advanced safety option, use the following model numbers.

SGD7S *1 | R70 | A | 00 | A | 000 | 010

- SGD7S: Σ-7 Series Σ-7S Models
- R70: 1st+2nd+3rd digits
- A: 4th digit
- 00: 5th+6th digits
- A: 7th digit
- 000: 8th+9th+10th digits
- 010: 11th+12th+13th digits

1st+2nd+3rd digits Maximum Applicable Motor Capacity

Voltage	Code	Specification
Three-phase, 200 VAC	R70*2	0.05 kW
	R90*2	0.1 kW
	1R6*2	0.2 kW
	2R8*2	0.4 kW
	3R8	0.5 kW
	5R5*2	0.75 kW
	7R6	1.0 kW
	120	1.5 kW
	180	2.0 kW
	200	3.0 kW
	330	5.0 kW
	470	6.0 kW
	550	7.5 kW
	590	11 kW
	780	15 kW
Single-phase, 100 VAC	R70	0.05 kW
	R90	0.1 kW
	2R1	0.2 kW
	2R8	0.4 kW

4th digit Voltage

Code	Specification
A	200 VAC
F	100 VAC

5th+6th digits Interface

Code	Specification
00	Analog voltage/pulse train reference
30	MECHATROLINK-III communications reference
A0	EtherCAT communications reference
M0	Sigma-7Siec (built-in single-axis control)

7th digit Design Revision Order

A: Global design revision

8th+9th+10th digits Hardware Options Specification

Code	Specification	Applicable Models
000	Without options	All models

11th+12th+13th digits Option Module

Code	Specification
010	Safety Module

*1. The model number of a SERVOPACK with an Option is not hyphenated after SGD7S.

*2. You can use these models with either a single-phase or three-phase power supply input.

Applicable Standards and Functions

◆ Applicable Safety Standards

Safety Standard	Applicable Standard	Applicable Products	
		SERVOPACK	SERVOPACK + Safety
Safety of Machinery	EN ISO13849-1:2008/AC:2009 IC 60204-1	✓	✓
Functional Safety	IEC 61508 Series IEC 62061 IEC 61800-5-2	✓	✓
EMC	IEC 61326-3-1	✓	✓

✓: Applicable

◆ Support for Functions Defined in IEC61800-5-2

Safety functions are implemented by using the hard wire base block (HWBB) in the SERVOPACK.

Safety Function	Description	Applicable Products	
		SERVOPACK	SERVOPACK + Safety
Safe BaseBlock Function (SBB function)	This safety function is equivalent to an STO function. (It shuts OFF the power supply from the SERVOPACK to the motor.)	✓	✓
Safe BaseBlock with Delay Function (SBB-D function)	This safety function is equivalent to an SS1 function. (It monitors the deceleration operation of the motor for the specified time and then shuts OFF the power supply from the SERVOPACK to the motor.)	–	✓
Safe Position Monitor with Delay Function (SPM-D function)	This safety function is equivalent to an SS2 function. (It monitors the deceleration operation of the motor for the specified time and then monitors the position after the motor stops.)	–	✓
Safely Limit Speed with Delay Function (SLS-D function)	This safety function is equivalent to an SLS function. (It monitors the deceleration operation of the motor for the specified time and then monitors the speed of the motor to confirm that it remains in the allowable range.)	–	✓

✓: Applicable

Specifications

◆ Basic Specifications

Item		Specification	
Operating Conditions	Surrounding Air Temperature	0˚C to +55˚C	
	Storage Temperature	-20˚C to +85˚C	
	Surrounding Air Humidity	90% relative humidity max.	There must be no freezing or condensation.
	Storage Humidity	90% relative humidity max.	
	Vibration Resistance	4.9 m/s^2	
	Shock Resistance	19.6 m/s^2	
	Degree of Protection	IP10	• Must be no corrosive or flammable gases. • Must be no exposure to water, oil, or chemicals. • Must be no dust, salts, or iron dust.
	Pollution Degree	2	
	Altitude	1000 m max.	
	Others	Do not use the SERVOPACK in the following locations: Locations subject to static electricity noise, strong electromagnetic/ magnetic fields, or radioactivity	

◆ Compliance with UL Standards, EU Directives, and Other Safety Standards (in Combination with SERVOPACK)

Item		Specification	
North American Safety Standards		UL61800-5-1 CSA C22.2 No.274	
European Directives	Machinery Directive (2006/42/EC)	EN ISO 13849-1: 2008/AC: 2009	
	EMC Directive (2004/108/EC)	EN 55011/A2 group 1, class A EN 61000-6-2 EN 61000-6-4 EN 61800-3	
	Low Voltage Directive (2006/95/EC)	EN 50178 EN 61800-5-1	
Safety Standards	Safety of Machinery	EN ISO 13849-1, IEC 60204-1	
	Functional Safety	IEC 61508-1 to IEC 61508-7, IEC 62061, and IEC 61800-5-2	
	EMC	IEC 61326-3-1	
Safety Function		IEC 61800-5-2	IEC 60204-1
		Safe Torque Off (STO)	Stop Category 0
		Safe Stop 1 (SS1)	Stop Category 1
		Safe Stop 2 (SS2)	Stop Category 2
		Safely Limited Speed (SLS)	
	Number of Blocks	2	
	Safety Function A	Input signals: 2 channels (redundant signals), output signals: 1 channel	
	Safety Function B	Input signals: 2 channels (redundant signals), output signals: 1 channel	

Item		Specification
Safe Performance		
	Safety Integrity Level	SIL2, SILCL2
	Probability of Dangerous Failure per Hour	PFH≥3.3×10^{-7} [1/h]
	Category	Cat3
	Performance Level	PLd (Category 2)
	Mean Time to Dangerous Failure of Each Channel	MTTFd: High
	Average Diagnostic Coverage	DCave: Medium
	Proof Test Interval	10 years

External Dimensions

Refer to pages 234 for the external dimensions of the individual SERVOPACKs.

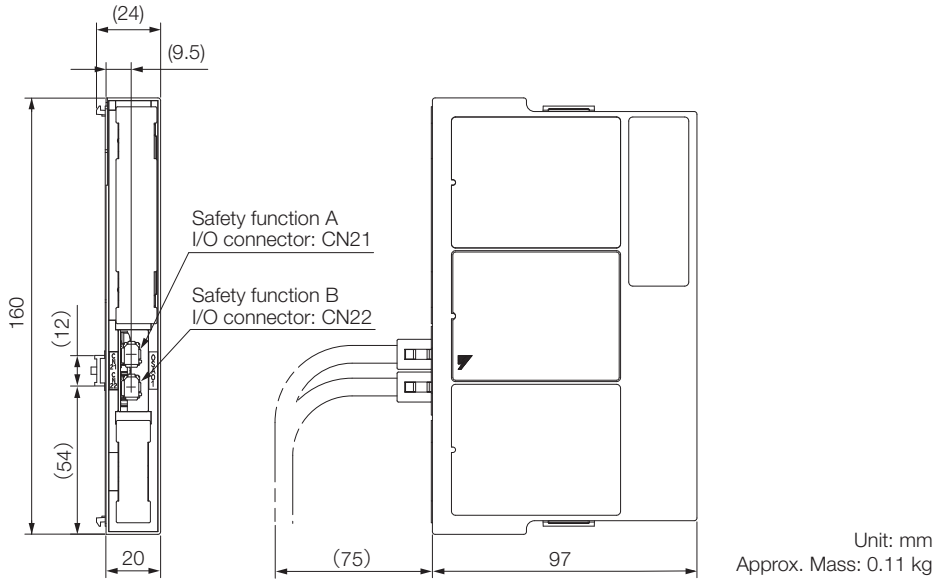

Unit: mm
Approx. Mass: 0.11 kg

Connectors

Device Label	Model	Number of Pins	Manufacturer
CN21	1981080-1	8	Tyco Electronics Japan G.K.
CN22	1981080-1	8	Tyco Electronics Japan G.K.

Note: 1. The above connectors or their equivalents are used for SERVOPACKs.

Single-Axis Control Option

Sigma-7Siec Option

The Sigma-7Siec option for Sigma-7 SERVOPACKs provides a compact, all-in-one servo/controller package with the following features:

- IEC61131-3 standard programming environment with PLCopen function blocks for motion control
- Self-tuning, anti-vibration, and other high performance, easy-to-implement servo control features
- Ethernet/IP, Modbus TCP/IP, and OPC server, which provide connectivity to PLCs, HMIs, SCADA, MES, and ERP
- Scaleability with the multi-axis MP3000iec controller platform via the common programming environment, MotionWorks IEC
- Web server that allows for maintenance diagnostics and troubleshooting
- I/O features: 7 digital inputs, 4 digital outputs

SERVOPACK Designations

◆ Purchasing a SERVOPACK with the Sigma-7Siec option

To order SERVOPACKs with the Sigma-7Siec option, use the following model numbers.

SGD7S - 2R8 A M0 A 000 F50 _ _ _

- SGD7S: Σ-7 Series SERVOPACK
- 2R8: 1st+2nd+3rd digits
- A: 4th digit
- M0: 5th+6th digits
- A: 7th digit
- 000: 8th+9th+10th digits
- F50: 11th+12th+13th digits
- _ _ _: 14th+15th+16th digits

1st+2nd+3rd digits Maximum Applicable Motor Capacity

Voltage	Code	Specification
Three-phase, 200 VAC	R70*2	0.05 kW
	R90*2	0.1 kW
	1R6*2	0.2 kW
	2R8*2	0.4 kW
	3R8	0.5 kW
	5R5*2	0.75 kW
	7R6	1.0 kW
	120	1.5 kW
	180	2.0 kW
	200	3.0 kW
	330	5.0 kW
	470	6.0 kW
	550	7.5 kW
	590	11 kW
	780	15 kW
Single-phase, 100 VAC	R70	0.05 kW
	R90	0.1 kW
	2R1	0.2 kW
	2R8	0.4 kW
Three-phase, 400 VAC	1R9	500 W
	3R5	1.0 kW
	5R4	1.5 kW
	8R4	2.0 kW
	120	3.0 kW
	170	5.0 kW
	210	6.0 kW
	260	7.5 kW
	280	11 kW
	370	15 kW

4th digit Voltage

Code	Specification
F	100 VAC
A	200 VAC
D	400 VAC

5th+6th digits Interface

Code	Specification
M0	Sigma-7Siec (built-in single-axis control)

7th digit Design Revision Order

A: Global design revision
B: 400V Global design revision

8th+9th+10th digits Hardware Options Specification

Code	Specification	Applicable Models
000	Without options	All models

11th+12th+13th digits FT/EX Specification

Code	Specification
F50	Application function for Sigma-7Siec

14th+15th+16th digits Option Module

Code	Specification
Blank	Standard
010*1	Safety Module*3

*1. The model number of a SERVOPACK with the Functional Safety option is not hyphenated after SGD7S.

*2. You can use these models with either a single-phase or three-phase power supply input.

*3. Safety module only available in 100 V and 200 V

Ratings and Specifications

Reference Sigma-7S EtherCAT Communications Reference SERVOPACKs ratings and specifications:

☞ *Ratings and Specifications* (page 423)

External Dimensions

Reference Sigma-7S EtherCAT Communications Reference SERVOPACK external dimensions:

☞ *Σ-7S SERVOPACKs: MECHATROLINK-III & EtherCAT Type (100/200V)* (page 465)

Cables and Peripheral Devices

Reference Sigma-7S EtherCAT Communications Reference SERVOPACK cables and peripheral devices:

☞ *SERVOPACK Cables* (page 504)

☞ *SERVOPACK Peripheral Devices* (page 514)

1.5-Axis Control Option

MP2600iec Option

The MP2600iec option for Sigma-7 SERVOPACKs provides a compact, all-in-one servo/controller package with the following features:

- IEC61131-3 standard programming environment with PLCopen function blocks for motion control
- Self-tuning, anti-vibration, and other high performance, easy-to-implement servo control features
- Ethernet/IP, Modbus TCP/IP, and OPC server, which provide connectivity to PLCs, HMIs, SCADA, MES, and ERP
- Scaleability with the multi-axis MP3000iec controller platform via the common programming environment, MotionWorks IEC
- Web server that allows for maintenance diagnostics and troubleshooting
- I/O features:
    - 15 digital inputs
    - 11 digital outputs
    - 1 analog input
    - 1 analog output
    - 1 external encoder input
    - 1 external encoder latch

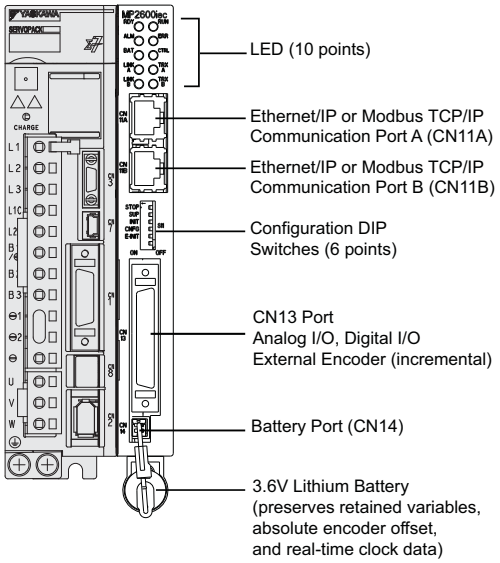

SERVOPACK Designations

◆ Purchasing a SERVOPACK with the MP2600iec option

To order SERVOPACKs with the MP2600iec option, use the following model numbers.

SGD7S *1 | 2R8 | A | E0 | A | 000 | 300

- SGD7S: Σ-7 Series SERVOPACK
- 2R8: 1st+2nd+3rd digits
- A: 4th digit
- E0: 5th+6th digits
- A: 7th digit
- 000: 8th+9th+10th digits
- 300: 11th+12th+13th digits

1st+2nd+3rd digits Maximum Applicable Motor Capacity

Voltage	Code	Specification
Three-phase, 200 VAC	R70*2	0.05 kW
	R90*2	0.1 kW
	1R6*2	0.2 kW
	2R8*2	0.4 kW
	3R8	0.5 kW
	5R5*2	0.75 kW
	7R6	1.0 kW
	120	1.5 kW
	180	2.0 kW
	200	3.0 kW
	330	5.0 kW
	470	6.0 kW
	550	7.5 kW
	590	11 kW
	780	15 kW
Single-phase, 100 VAC	R70	0.05 kW
	R90	0.1 kW
	2R1	0.2 kW
	2R8	0.4 kW

4th digit Voltage

Code	Specification
A	200 VAC
F	100 VAC

5th+6th digits Interface

Code	Specification
E0	Other control architecture type

7th digit Design Revision Order

A: Global design revision

8th+9th+10th digits Hardware Options Specification

Code	Specification	Applicable Models
000	Without options	All models

11th+12th+13th digits FT/EX Specification

Code	Specification
300	MP2600iec single-axis control option

*1. The model number of a SERVOPACK with an Option is not hyphenated after SGD7S.

*2. You can use these models with either a single-phase or three-phase power supply input.

External Dimensions

Reference Analog Voltage / Pulse Train Reference SERVOPACKs external dimensions

☞ *Σ-7S SERVOPACKs: Analog/Pulse & Command Option Type (100/200V)* (page 462)

In order to determine the overall dimensions of the SERVOPACK & MP2600iec option card, add the dimensions of the option card pictured below to the base SERVOPACK dimensions.

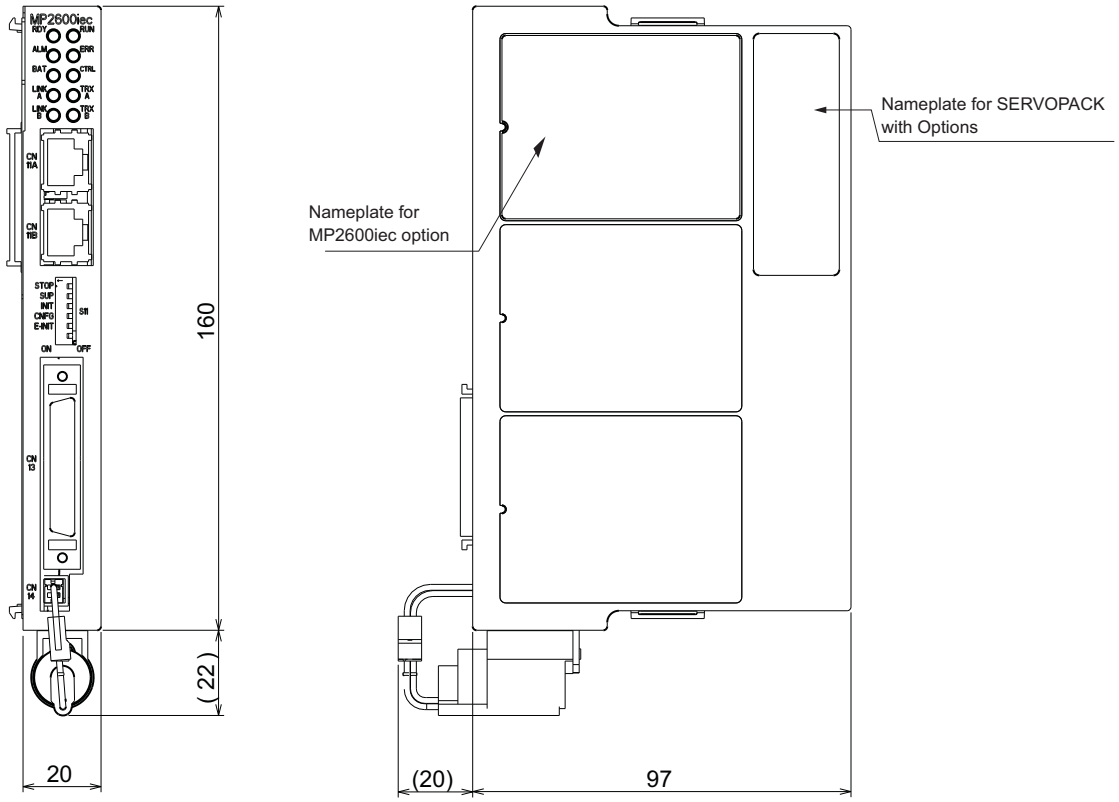

Dimensions in mm.

Ratings and Specifications

SERVOPACK Ratings

◆ Three-Phase, 200 VAC

Model SGD7S-			R70A	R90A	1R6A	2R8A	3R8A	5R5A	7R6A	120A	180A	200A	330A
Maximum Applicable Motor Capacity [kW]			0.05	0.1	0.2	0.4	0.5	0.75	1.0	1.5	2.0	3.0	5.0
Continuous Output Current [Arms]			0.66	0.91	1.6	2.8	3.8	5.5	7.6	11.6	18.5	19.6	32.9
Instantaneous Maximum Output Current [Arms]			2.1	3.2	5.9	9.3	11	16.9	17	28	42	56	84.0
Main Circuit	Power Supply		200 VAC to 240 VAC, -15% to +10%, 50 Hz/60 Hz										
	Input Current [Arms]*		0.4	0.8	1.3	2.5	3.0	4.1	5.7	7.3	10	15	25
Control	Power Supply		200 VAC to 240 VAC, -15% to +10%, 50 Hz/60 Hz										
	Input Current [Arms]*		0.2	0.2	0.2	0.2	0.2	0.2	0.2	0.2	0.25	0.25	0.3
Power Supply Capacity [kVA]*			0.2	0.3	0.5	1.0	1.3	1.6	2.3	3.2	4.0	5.9	7.5
Power Loss*	Main Circuit Power Loss [W]		5.0	7.0	11.9	22.5	28.5	38.9	49.2	72.6	104.2	114.2	226.6
	Control Circuit Power Loss [W]		12	12	12	12	14	14	14	15	16	16	19
	Built-in Regenerative Resistor Power Loss [W]		-	-	-	-	8	8	8	10	16	16	36
	Total Power Loss [W]		17.0	19.0	23.9	34.5	50.5	60.9	71.2	97.6	136.2	146.2	281.6
Regenerative Resistor	Built-In Regenerative Resistor	Resistance [W]	-	-	-	-	40	40	40	20	12	12	8
		Capacity [W]	-	-	-	-	40	40	40	60	60	60	180
	Minimum Allowable External Resistance [W]		40	40	40	40	40	40	40	20	12	12	8
Overvoltage Category			III										

* This is the net value at the rated load.

Model SGD7S-			470A	550A	590A	780A
Maximum Applicable Motor Capacity [kW]			6.0	7.5	11	15
Continuous Output Current [Arms]			46.9	54.7	58.6	78.0
Instantaneous Maximum Output Current [Arms]			110	130	140	170
Main Circuit	Power Supply		200 VAC to 240 VAC, -15% to +10%, 50 Hz/60 Hz			
	Input Current [Arms]*1		29	37	54	73
Control	Power Supply		200 VAC to 240 VAC, -15% to +10%, 50 Hz/60 Hz			
	Input Current [Arms]*1		0.3	0.3	0.4	0.4
Power Supply Capacity [kVA]*1			10.7	14.6	21.7	29.6
Power Loss*1	Main Circuit Power Loss [W]		271.7	326.9	365.3	501.4
	Control Circuit Power Loss [W]		21	21	28	28
	External Regenerative Resistor Power Loss [W]		180*2	350*3	350*3	350*3
	Total Power Loss [W]		292.7	347.9	393.3	529.4
Regenerative Resistor	External Regenerative Resistor	Resistance [Ω]	6.25*2	3.13*3	3.13*3	3.13*3
		Capacity [W]	880*2	1760*3	1760*3	1760*3
	Minimum Allowable External Resistance [Ω]		5.8	2.9	2.9	2.9
Overvoltage Category			III			

*1. This is the net value at the rated load.
*2. This value is for the optional JUSP-RA04-E Regenerative Resistor Unit.
*3. This value is for the optional JUSP-RA05-E Regenerative Resistor Unit.

◆ Single-phase, 200 VAC

Model SGD7S-			R70A	R90A	1R6A	2R8A	5R5A	120A
Maximum Applicable Motor Capacity [kW]			0.05	0.1	0.2	0.4	0.75	1.5
Continuous Output Current [Arms]			0.66	0.91	1.6	2.8	5.5	11.6
Instantaneous Maximum Output Current [Arms]			2.1	3.2	5.9	9.3	16.9	28
Main Circuit	Power Supply		200 VAC to 240 VAC, -15% to +10%, 50 Hz/60 Hz					
	Input Current [Arms]*		0.8	1.6	2.4	5.0	8.7	16
Control	Power Supply		200 VAC to 240 VAC, -15% to +10%, 50 Hz/60 Hz					
	Input Current [Arms]*		0.2	0.2	0.2	0.2	0.2	0.25
Power Supply Capacity [kVA]*			0.2	0.3	0.6	1.2	1.9	4.0
Power Loss*	Main Circuit Power Loss [W]		5.0	7.1	12.1	23.7	39.2	71.8
	Control Circuit Power Loss [W]		12	12	12	12	14	16
	Built-in Regenerative Resistor Power Loss [W]		–	–	–	–	8	16
	Total Power Loss [W]		17.0	19.1	24.1	35.7	61.2	103.8
Regenerative Resistor	Built-In Regenerative Resistor	Resistance [Ω]	–	–	–	–	40	12
		Capacity [W]	–	–	–	–	40	60
	Minimum Allowable External Resistance [Ω]		40	40	40	40	40	12
Overvoltage Category			III					

* This is the net value at the rated load.

◆ 270 VDC

Model SGD7S-		R70A	R90A	1R6A	2R8A	3R8A	5R5A	7R6A	120A
Maximum Applicable Motor Capacity [kW]		0.05	0.1	0.2	0.4	0.5	0.75	1.0	1.5
Continuous Output Current [Arms]		0.66	0.91	1.6	2.8	3.8	5.5	7.6	11.6
Instantaneous Maximum Output Current [Arms]		2.1	3.2	5.9	9.3	11.0	16.9	17.0	28.0
Main Circuit	Power Supply	270 VDC to 324 VDC, -15% to +10%							
	Input Current [Arms]*1	0.5	1.0	1.5	3.0	3.8	4.9	6.9	11
Control	Power Supply	270 VDC to 324 VDC, -15% to +10%							
	Input Current [Arms]*1	0.2	0.2	0.2	0.2	0.2	0.2	0.2	0.2*2
Power Supply Capacity [kVA]*1		0.2	0.3	0.6	1	1.4	1.6	2.3	3.2
Power Loss*1	Main Circuit Power Loss [W]	4.4	5.9	9.8	17.5	23.0	30.7	38.7	55.8
	Control Circuit Power Loss [W]	12	12	12	12	14	14	14	15
	Total Power Loss [W]	16.4	17.9	21.8	29.5	37.0	44.7	52.7	70.8
Overvoltage Category		III							

*1. This is the net value at the rated load.
*2. The value is 0.25 Arms for the SGD7S-120A00A008.

Model SGD7S-		180A	200A	330A	470A	550A	590A	780A
Maximum Applicable Motor Capacity [kW]		2.0	3.0	5.0	6.0	7.5	11.0	15.0
Continuous Output Current [Arms]		18.5	19.6	32.9	46.9	54.7	58.6	78.0
Instantaneous Maximum Output Current [Arms]		42.0	56.0	84.0	110	130	140	170
Main Circuit	Power Supply	270 VDC to 324 VDC, -15% to +10%						
	Input Current [Arms]*	14	20	34	36	48	68	92
Control	Power Supply	270 VDC to 324 VDC, -15% to +10%						
	Input Current [Arms]*	0.25	0.25	0.3	0.3	0.3	0.4	0.4
Power Supply Capacity [kVA]*		4.0	5.9	7.5	10.7	14.6	21.7	29.6
Power Loss*	Main Circuit Power Loss [W]	82.7	83.5	146.2	211.6	255.3	243.6	343.4
	Control Circuit Power Loss [W]	16	16	19	21	21	28	28
	Total Power Loss [W]	98.7	99.5	165.2	232.6	276.3	271.6	371.4
Overvoltage Category		III						

* This is the net value at the rated load.

◆ Single-phase, 100 VAC

Model SGD7S-		R70F	R90F	2R1F	2R8F
Maximum Applicable Motor Capacity [kW]		0.05	0.1	0.2	0.4
Continuous Output Current [Arms]		0.66	0.91	2.1	2.8
Instantaneous Maximum Output Current [Arms]		2.1	3.2	6.5	9.3
Main Circuit	Power Supply	100 VAC to 120 VAC, -15% to +10%, 50 Hz/60 Hz			
	Input Current [Arms]*	1.5	2.5	5	10
Control	Power Supply	100 VAC to 120 VAC, -15% to +10%, 50 Hz/60 Hz			
	Input Current [Arms]*	0.38	0.38	0.38	0.38
Power Supply Capacity [kVA]*		0.2	0.3	0.6	1.4
Power Loss*	Main Circuit Power Loss [W]	5.3	7.8	14.2	26.2
	Control Circuit Power Loss [W]	12	12	12	12
	Total Power Loss [W]	17.3	19.8	26.2	38.2
Regenerative Resistor	Minimum Allowable External Resistance [Ω]	40	40	40	40
Overvoltage Category		III			

* This is the net value at the rated load.

Specifications

<table>
<tr><th colspan="2">Item</th><th>Specification</th></tr>
<tr><td colspan="2">Control Method</td><td>IGBT-based PWM control, sine wave current drive</td></tr>
<tr><td rowspan="2">Feedback</td><td>With Rotary Servomotor</td><td>Serial encoder: 17 bits (absolute encoder)
20 bits or 24 bits (incremental encoder/absolute encoder)</td></tr>
<tr><td>With Linear Servomotor</td><td>• Absolute linear encoder (The signal resolution depends on the absolute linear encoder.)
• Incremental linear encoder (The signal resolution depends on the incremental linear encoder or Serial Converter Unit.)</td></tr>
<tr><td rowspan="8">Environmental Conditions</td><td>Surrounding Air Temperature</td><td>0°C to 45°C</td></tr>
<tr><td>Storage Temperature</td><td>-20°C to 85°C</td></tr>
<tr><td>Surrounding Air Humidity</td><td>90% relative humidity max. (with no freezing or condensation)</td></tr>
<tr><td>Storage Humidity</td><td>90% relative humidity max. (with no freezing or condensation)</td></tr>
<tr><td>Vibration Resistance</td><td>4.9 m/s^2</td></tr>
<tr><td>Shock Resistance</td><td>19.6 m/s^2</td></tr>
<tr><td>Degree of Protection</td><td><table><tr><th>Class</th><th>SERVOPACK Model: SGD7S-</th></tr><tr><td>IP20</td><td>R70A, R90A, 1R6A, 2R8A, 3R8A, 5R5A, 7R6A, 120A, R70F, R90F, 2R1F, 2R8F</td></tr><tr><td>IP10</td><td>120AE0A008, 180A, 200A, 330A, 470A, 550A, 590A, 780A</td></tr></table></td></tr>
<tr><td>Pollution Degree</td><td>2
• Must be no corrosive or flammable gases.
• Must be no exposure to water, oil, or chemicals.
• Must be no dust, salts, or iron dust.</td></tr>
<tr><td>Altitude</td><td>1,000 m max.</td></tr>
<tr><td>Others</td><td>Do not use the SERVOPACK in the following locations: Locations subject to static electricity noise, strong electromagnetic/magnetic fields, or radioactivity</td></tr>
<tr><td colspan="2">Applicable Standards</td><td>UL 61800-5-1 (E147823), CSA C22.2 No.274, EN ISO13849-1: 2015,
EN 55011 group 1 class A, EN 61000-6-2, EN 61000-6-4,
EN 61800-3 (Category C2, Second environment), EN 50178,
EN 61800-5-1, IEC 60204-1, IEC 61508 series, IEC 62061,
IEC 61800-5-2, and IEC 61326-3-1</td></tr>
<tr><td colspan="2">Mounting</td><td><table><tr><th>Mounting</th><th>SERVOPACK Model: SGD7S-</th></tr><tr><td>Base-mounted</td><td>All Models</td></tr><tr><td>Rack-mounted</td><td>R70A, R90A, 1R6A, 2R8A, 3R8A, 5R5A, 7R6A, 120A, 180A, 200A, 330A, R70F, R90F, 2R1F, 2R8F</td></tr><tr><td>Duct-ventilated</td><td>470A, 550A, 590A, 780A</td></tr></table></td></tr>
<tr><td rowspan="4">Performance</td><td>Speed Control Range</td><td>1:5000 (At the rated torque, the lower limit of the speed control range must not cause the Servomotor to stop.)</td></tr>
<tr><td rowspan="3">Coefficient of Speed Fluctuation*1</td><td>±0.01% of rated speed max. (for a load fluctuation of 0% to 100%)</td></tr>
<tr><td>0% of rated speed max. (for a voltage fluctuation of ±10%)</td></tr>
<tr><td>±0.1% of rated speed max. (for a temperature fluctuation of 25°C ±25°C)</td></tr>
<tr><td>Torque Control Precision (Repeatability)</td><td>±1%</td></tr>
<tr><td>Soft Start Time Setting</td><td>0 s to 10 s (Can be set separately for acceleration and deceleration.)</td></tr>
<tr><td rowspan="2">I/O Signals</td><td>Encoder Divided Pulse Output</td><td>Phase A, phase B, phase C: Line-driver output Number of divided output pulses: Any setting is allowed.</td></tr>
<tr><td>Overheat Protection Input</td><td>Number of input points: 1
Input voltage range: 0 V to +5 V</td></tr>
</table>

Continued on next page.

Continued from previous page.

Item				Specification
I/O Signals	Sequence Input Signals	SERVOPACK	Fixed Input	Allowable voltage range: 24 VDC ±20% Number of input points: 6
				Input method: Sink inputs or source inputs Input Signals: • Alarm Reset (/ALM-RST) • Forward Drive Prohibited (P-OT) • Reverse Drive Prohibited (N-OT) • Origin Return Deceleration Switch (/DEC) • Registration (/RGRT) • Servo ON (/S-ON) A signal can be allocated and the positive and negative logic can be changed.
				Allowable voltage range: 24 VDC ±20% Number of input points: 11
				/MODE 0/1 (Mode Switch Input) signal
	Sequence Output Signals	SERVOPACK	Fixed Output	Allowable voltage range: 5 VDC to 30 VDC Number of output points: 1 Output signal: Servo Alarm (/ALM)
			Output Signals for Which Allocations Can Be Changed	Allowable voltage range: 5 VDC to 30 VDC Number of output points: 3. (A photocoupler output (isolated) is used.)
				Output Signals: • Warning Output (/WARN) • Brake Output (/BK) • Servo Ready Output (/S-RDY) • Alarm Code Output (/ALO1, /ALO2, and /ALO3) A signal can be allocated and the positive and negative logic can be changed.
Communications	RS-422A Communications (CN3)		Interfaces	Digital Operator (JUSP-OP05A-1-E) and personal computer (with SigmaWin+)
			1:N Communications	Up to N = 15 stations possible for RS-422A port
			Axis Address Setting	Set with parameters.
	USB Communications (CN7)		Interfaces	Interface Personal computer (with SigmaWin+)
			Communications Standard	Conforms to USB2.0 standard (12 Mbps).
Displays/ Indicators	SERVOPACK			CHARGE and PWR indicators, and one-digit seven-segment display
Analog Monitor (CN5)				Number of points: 2 Output voltage range: ±10 VDC (effective linearity range: ±8 V) Resolution: 16 bits; Accuracy: ±20 mV (Typ) Maximum output current: ±10 mA Settling time (±1%): 1.2 ms (Typ)
Dynamic Brake (DB)				Activated when a servo alarm or overtravel (OT) occurs, or when the power supply to the main circuit or servo is OFF.
Regenerative Processing				Built-in (An external resistor must be connected to the SGD7S-470A to -780A.) Refer to the following section for details. ☞ **Built-In Regenerative Resistor (page 539)**
Overtravel (OT) Prevention				Stopping with a dynamic brake (DB), coasting to a stop, performing a hard stop, or performing a smooth stop (decelerating to a stop) for a CCW-OT (CCW Drive Prohibit Input) signal or CW-OT (CW Drive Prohibit Input) signal.
Protective Functions				Overcurrent, overvoltage, low voltage, overload, regeneration error, etc.
Utility Functions				Gain adjustment, alarm history, jogging, origin search, etc.
Safety Functions	Inputs			/HWBB1 and /HWBB2: Base block signals for Power Modules
	Output			EDM1: Monitors the status of built-in safety circuit (fixed output).
	Applicable Standards*2			ISO13849-1 PLe (Category 3), IEC61508 SIL3

*1. The coefficient of speed fluctuation for load fluctuation is defined as follows:

$$\text{Coefficient of speed fluctuation} = \frac{\text{No-load motor speed - Total-load motor speed}}{\text{Rated motor speed}} \times 100\%$$

*2. Always perform risk assessment for the system and confirm that the safety requirements are met.

Cables and Peripheral Devices

Reference Sigma-7S Single-Axis Command Option Attachable SERVOPACK section for cables and peripheral devices:

☞ *SERVOPACK Cables* (page 504)
☞ *SERVOPACK Peripheral Devices* (page 514)

Network Indexer Option

SigmaLogic7 Compact Option

The SigmaLogic7 Compact option for Sigma-7 SERVOPACKs provides an intuitive, easy to implement solution for programming motion control using Rockwell PLCs. SigmaLogic7 Compact allows you to use Yaskawa's written and tested add-on instructions (AOIs) in your RSLogix5000 program with a ControlLogix or CompactLogix PLC. No other Yaskawa programming software is required:

- Use as many SigmaLogic instances as you have unused connections in your PLC
- Perform basic point-to-point moves, blended speed moves, homing, jogging, and gearing to an external encoder using direct commands or initiating moves through a configurable sequence table
- The LogixWorksTM software utility may be used to download sequence and configuration data

A full list of available add-on instructions is listed below. These are compatible with all CompactLogix and ControlLogix PLCs using RSLogix5000 software version 17 and above.

AOI Names	AOI Descriptions
MCFG_Yaskawa	Motion Axis Configuration
MSO_Yaskawa	Motion Axis Servo On
MSF_Yaskawa	Motion Axis Servo Off
MAS_Yaskawa	Motion Axis Stop
MAFR_Yaskawa	Motion Axis Fault Reset
MAM_Yaskawa	Motion Axis Move
MAJ_Yaskawa	Motion Axis Jog
MAHSP_Yaskawa	Motion Axis Home Set Position
MAH_Yaskawa	Motion Axis Homing
MAG_Yaskawa	Motion Axis “Gearing” Move
MAB_Yaskawa	Motion Axis “Blend” Move
MSQR_Yaskawa	Motion Axis Index Run Sequencer
MSQE_Yaskawa	Motion Axis Index Step Edit
MHSI_Yaskawa	Motion Axis High-Speed Index
MTRQ_Yaskawa	Motion Axis Torque Control
MCLK_Yaskawa	Motion Axis Set Clock
MPLS_Yaskawa	Motion Axis Programmable Limit Switch

Home Types
1 - Set Position Directly
2 - Home in Positive Direction to Hard Stop
3 - Home in Negative Direction to Hard Stop
4 - Home in Positive Direction to Limit w/o C-Pulse
5 - Home in Negative Direction to Limit w/o C-Pulse
6 - Home in Positive Direction to Limit w/ C-Pulse
7 - Home in Negative Direction to Limit w/ C-Pulse
8 - Home in Positive Direction to Input w/o C-Pulse
9 - Home in Negative Direction to Input w/o C-Pulse
10 - Home in Positive Direction to Input w/ C-Pulse
11 - Home in Negative Direction to Input w/ C-Pulse

Move Types
1 - Absolute Move
2 - Absolute Move with Registration
3 - Relative Move
4 - Relative Move with Registration
5 - Blended Move
6 – Jog
7 - Jog with Registration
8 - Gear On
9 - Gear Off
10 - Superimpose Move on Gear
11 - Torque Mode
12 - High Speed Index

SERVOPACK Designations

◆ Purchasing a SERVOPACK with the SigmaLogic7 Compact option

To order SERVOPACKs with the SigmaLogic7 Compact option, use the following model numbers.

SGD7S - 2R8 A Q0 A 000 F51

- SGD7S: Σ-7 Series SERVOPACK
- 2R8: 1st+2nd+3rd digits
- A: 4th digit
- Q0: 5th+6th digits
- A: 7th digit
- 000: 8th+9th+10th digits
- F51: 11th+12th+13th digits

1st+2nd+3rd digits Maximum Applicable Motor Capacity

Voltage	Code	Specification
Three-phase, 200 VAC	R70*1	0.05 kW
	R90*1	0.1 kW
	1R6*1	0.2 kW
	2R8*1	0.4 kW
	3R8	0.5 kW
	5R5*1	0.75 kW
	7R6	1.0 kW
	120	1.5 kW
	180	2.0 kW
	200	3.0 kW
	330	5.0 kW
	470	6.0 kW
	550	7.5 kW
	590	11 kW
	780	15 kW
Single-phase, 100 VAC	R70	0.05 kW
	R90	0.1 kW
	2R1	0.2 kW
	2R8	0.4 kW

4th digit Voltage

Code	Specification
A	200 VAC
F	100 VAC

5th+6th digits Interface

Code	Specification
Q0	SigmaLogic7 Compact (Ethernet/IP Indexer)

7th digit Design Revision Order

A: Global design revision

8th+9th+10th digits Hardware Options Specification

Code	Specification	Applicable Models
000	Without options	All models

11th+12th+13th digits FT/EX Specification

Code	Specification
F51	Application function for SigmaLogic7 Compact

*1. You can use these models with either a single-phase or three-phase power supply input.

Ratings and Specifications

Reference Sigma-7S EtherCAT Communications Reference SERVOPACKs ratings and specifications:

☞ *Ratings and Specifications* (page 423)

External Dimensions

Reference Sigma-7S EtherCAT Communications Reference SERVOPACK external dimensions:

☞ *Σ-7S SERVOPACKs: MECHATROLINK-III & EtherCAT Type (100/200V)* (page 465)

Cables and Peripheral Devices

Reference Sigma-7S EtherCAT Communications Reference SERVOPACK cables and peripheral devices:

☞ *SERVOPACK Cables* (page 504)
☞ *SERVOPACK Peripheral Devices* (page 514)

FT Specification Options

FT19 Option - Less Deviation Control

The FT19 option for the Sigma-7 SERVOPACK provides built-in control with less deviation. There is almost no delay in motor operation for position references, which prevents path error caused by positioning response delays, and prevents interference between the machine and moving parts. FT19 is available with MECHATROLINK-III and Analog/Pulse style SERVOPACKs.

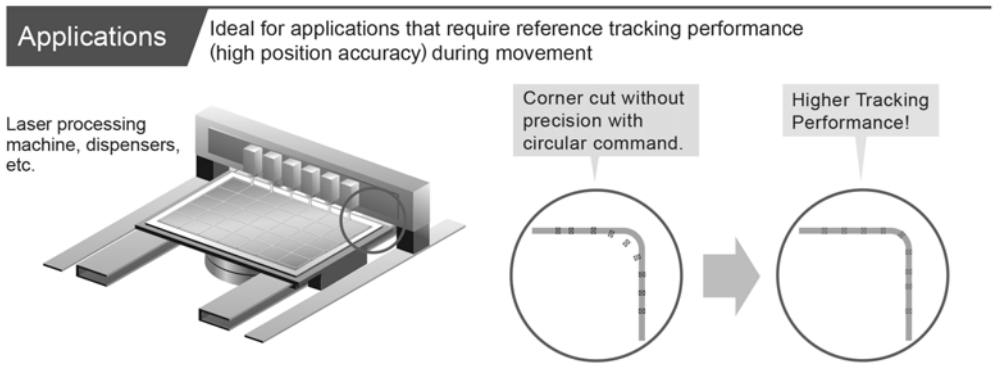

SERVOPACK Designations

◆ Purchasing a SERVOPACK with the FT19 option

To order SERVOPACKs with the FT19 option, use the following model numbers.

SGD7S - 2R8 A 30 A 000 F19

- Σ-7 Series SERVOPACK
- 1st+2nd+3rd digits
- 4th digit
- 5th+6th digits
- 7th digit
- 8th+9th+10th digits
- 11th+12th+13th digits

1st+2nd+3rd digits Maximum Applicable Motor Capacity

Voltage	Code	Specification
Three-phase, 200 VAC	R70*1	0.05 kW
	R90*1	0.1 kW
	1R6*1	0.2 kW
	2R8*1	0.4 kW
	3R8	0.5 kW
	5R5*1	0.75 kW
	7R6	1.0 kW
	120	1.5 kW
	180	2.0 kW
	200	3.0 kW
	330	5.0 kW
	470	6.0 kW
	550	7.5 kW
	590	11 kW
	780	15 kW
Single-phase, 100 VAC	R70	0.05 kW
	R90	0.1 kW
	2R1	0.2 kW
	2R8	0.4 kW

4th digit Voltage

Code	Specification
A	200 VAC
F	100 VAC

5th+6th digits Interface

Code	Specification
00	Analog voltage/pulse train reference
30	MECHATROLINK-III communications reference

7th digit Design Revision Order

A: Global design revision

8th+9th+10th digits Hardware Options Specification

Code	Specification	Applicable Models
000	Without options	All models

11th+12th+13th digits FT/EX Specification

Code	Specification
F19	Application function for Less Deviation Control

*1. You can use these models with either a single-phase or three-phase power supply input.

Ratings and Specifications

Reference the Sigma-7S Ratings and Specifications of the appropriate SERVOPACK type:

☞ *Σ-7S Single-axis Analog Voltage/Pulse Train Reference SERVOPACKs* (page 398)
☞ *Σ-7S Single-axis MECHATROLINK-III Communications Reference SERVOPACKs* (page 408)
☞ *Σ-7S Single-axis EtherCAT Communications Reference SERVOPACKs* (page 422)

External Dimensions

Reference the Sigma-7S External Dimensions of the appropriate SERVOPACK type:

☞ *SERVOPACK External Dimensions* (page 458)

Cables and Peripheral Devices

Reference Sigma-7S Cables and Peripheral Devices of the appropriate SERVOPACK type::

☞ *SERVOPACK Cables* (page 504)
☞ *SERVOPACK Peripheral Devices* (page 514)

FT Specification Options

FT79 Option - Built-in Indexer

The FT79 option for the Sigma-7 SERVOPACK provides built-in positioning with an indexer that lets you easily achieve motion control simply by entering positions, speeds, and other data for the operation pattern in the SigmaWin+ configuration tool. FT79 is available with Analog/Pulse style SERVOPACKs.

Features — High-Precision, High-Speed Positioning without a Motion Controller

The operation pattern is easily set by entering the positions, speeds, and other data in a program table. You can use the SigmaWin+ Engineering Tool to easily and efficiently set up and edit operation patterns.

- Convenient positioning functions are also provided: ZONE signal outputs, jog speed table, origin returns, and more.
- A start command is received from a host controller to start positioning.

Program Table Setting Example

PGMSTEP	POS	SPD	RDST	RSPD	ACC	DEC	EVENT	LOOP	NEXT
0	I+400000	2000	500000	1000	200	100	T5000	1	1
1	I+100000	1000	200000	2000	100	50	IT0	1	END
⋮	⋮	⋮	⋮	⋮	⋮	⋮	⋮	⋮	⋮
n	I+400000	2000	500000	1000	100	50	IT100	1	n+1
n+1	I+100000	1000	200000	2000	⋮	⋮	NT0	1	END
⋮	⋮	⋮	⋮	⋮	⋮	⋮	⋮	⋮	⋮
254	I+400000	2000	500000	1000	100	50	SEL3T200	1	127
255	I+100000	1000	200000	2000	100	50	DT0	1	END

POS/SPD/ACC/DEC commands

An operation pattern is set up by entering the target positions, positioning speeds, accelerations, and decelerations.

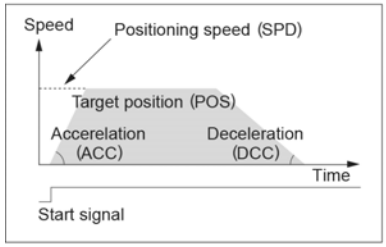

RDST/RSPD commands

The external signals can be used to control positioning (registration).

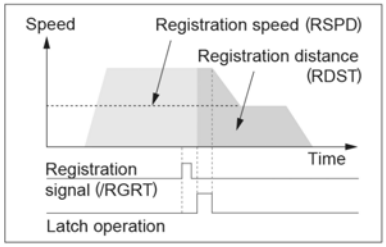

EVENT command

Conditions can be set to determine the completion of a program step.

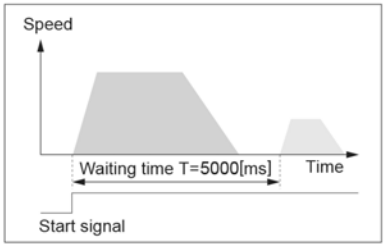

Applications — High-precision Positioning and Downsizing

Point-to-point positioning

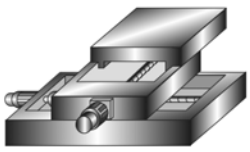

Fixed point positioning

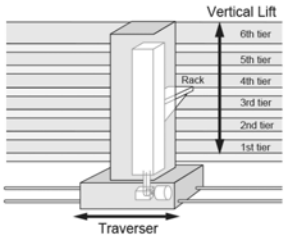

Station positioning (Indexing)

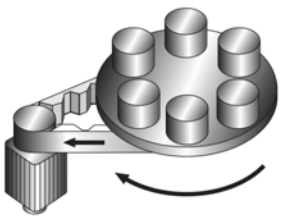

Feeding

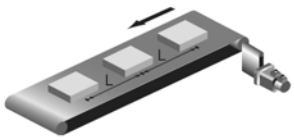

SERVOPACK Designations

◆ Purchasing a SERVOPACK with the FT79 option

To order SERVOPACKs with the FT79 option, use the following model numbers.

SGD7S - 2R8 A 30 A 000 F79

- SGD7S: Σ-7 Series SERVOPACK
- 2R8: 1st+2nd+3rd digits
- A: 4th digit
- 30: 5th+6th digits
- A: 7th digit
- 000: 8th+9th+10th digits
- F79: 11th+12th+13th digits

1st+2nd+3rd digits Maximum Applicable Motor Capacity

Voltage	Code	Specification
Three-phase, 200 VAC	R70*1	0.05 kW
	R90*1	0.1 kW
	1R6*1	0.2 kW
	2R8*1	0.4 kW
	3R8	0.5 kW
	5R5*1	0.75 kW
	7R6	1.0 kW
	120	1.5 kW
	180	2.0 kW
	200	3.0 kW
	330	5.0 kW
	470	6.0 kW
	550	7.5 kW
	590	11 kW
	780	15 kW
Single-phase, 100 VAC	R70	0.05 kW
	R90	0.1 kW
	2R1	0.2 kW
	2R8	0.4 kW

4th digit Voltage

Code	Specification
A	200 VAC
F	100 VAC

5th+6th digits Interface

Code	Specification
00	Analog voltage/pulse train reference

7th digit Design Revision Order

A: Global design revision

8th+9th+10th digits Hardware Options Specification

Code	Specification	Applicable Models
000	Without options	All models

11th+12th+13th digits FT/EX Specification

Code	Specification
F79	Application function for Simple Indexer

*1. You can use these models with either a single-phase or three-phase power supply input.

Ratings and Specifications

Reference the Sigma-7S Ratings and Specifications of the appropriate SERVOPACK type:

☞ *Σ-7S Single-axis Analog Voltage/Pulse Train Reference SERVOPACKs* (page 398)
☞ *Σ-7S Single-axis MECHATROLINK-III Communications Reference SERVOPACKs* (page 408)
☞ *Σ-7S Single-axis EtherCAT Communications Reference SERVOPACKs* (page 422)

External Dimensions

Reference the Sigma-7S External Dimensions of the appropriate SERVOPACK type:

☞ *SERVOPACK External Dimensions* (page 458)

Cables and Peripheral Devices

Reference Sigma-7S Cables and Peripheral Devices of the appropriate SERVOPACK type::

☞ *SERVOPACK Cables* (page 504)
☞ *SERVOPACK Peripheral Devices* (page 514)

FT Specification Options

FT81 Option - Harmonic Drive SHA Actuators

The FT81 option for the Sigma-7 SERVOPACK provides support for Harmonic Drive SHA Series Actuators. FT81 is available with MECHATROLINK-III and EtherCAT style SERVOPACKs.

SHA-SG

SHA-SG featuring compact-shape

Compact

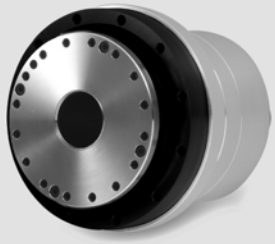

The SHA Servo Actuator combines precision Harmonic Drive® gearing with a flat AC servo motor.
It has a unique compact shape and Hollow Shaft actuator design. Five sizes are available: 25, 32, 40, 58, and 65. Sizes 25 and 32 can also be combined with HarmonicPlanetary® gearing.

SHA-CG

SHA-CG with improved output flange runout accuracy

High Accuracy

Even Ratios



The SHA-CG delivers high precision with improved positioning accuracy and surface runout. These actuators are ideal for high precision rotary applications such as indexing tables. Three sizes are available: 25, 32, and 40.

SERVOPACK Designations

◆ Purchasing a SERVOPACK with the FT81 option

To order SERVOPACKs with the FT81 option, use the following model numbers.

SGD7S - 2R8 A 30 A 000 F81

- Σ-7 Series SERVOPACK
- 1st+2nd+3rd digits
- 4th digit
- 5th+6th digits
- 7th digit
- 8th+9th+10th digits
- 11th+12th+13th digits

1st+2nd+3rd digits Maximum Applicable Motor Capacity

Voltage	Code	Specification
Three-phase, 200 VAC	R70*1	0.05 kW
	R90*1	0.1 kW
	1R6*1	0.2 kW
	2R8*1	0.4 kW
	3R8	0.5 kW
	5R5*1	0.75 kW
	7R6	1.0 kW
	120	1.5 kW
	180	2.0 kW
	200	3.0 kW
	330	5.0 kW
	470	6.0 kW
	550	7.5 kW
	590	11 kW
	780	15 kW
Single-phase, 100 VAC	R70	0.05 kW
	R90	0.1 kW
	2R1	0.2 kW
	2R8	0.4 kW

4th digit Voltage

Code	Specification
A	200 VAC
F	100 VAC

5th+6th digits Interface

Code	Specification
00	Analog voltage/pulse train reference
30	MECHATROLINK-III communications reference
A0	EtherCAT communications reference

7th digit Design Revision Order

A: Global design revision

8th+9th+10th digits Hardware Options Specification

Code	Specification	Applicable Models
000	Without options	All models

11th+12th+13th digits FT/EX Specification

Code	Specification
F81	Application function for connection to Harmonic Drive SHA series actuators

*1. You can use these models with either a single-phase or three-phase power supply input.

Ratings and Specifications

Reference the Sigma-7S Ratings and Specifications of the appropriate SERVOPACK type:

☞ *Σ-7S Single-axis Analog Voltage/Pulse Train Reference SERVOPACKs* (page 398)
☞ *Σ-7S Single-axis MECHATROLINK-III Communications Reference SERVOPACKs* (page 408)
☞ *Σ-7S Single-axis EtherCAT Communications Reference SERVOPACKs* (page 422)

External Dimensions

Reference the Sigma-7S External Dimensions of the appropriate SERVOPACK type:

☞ *SERVOPACK External Dimensions* (page 458)

Cables and Peripheral Devices

Reference Sigma-7S Cables and Peripheral Devices of the appropriate SERVOPACK type::

☞ *SERVOPACK Cables* (page 504)
☞ *SERVOPACK Peripheral Devices* (page 514)

For more information on Harmonic Drive SHA Series Actuators:
Visit: http://www.harmonicdrive.net/products/rotary-actuators/hollow-shaft-actuators/sha-sg

FT Specification Options

FT82/83 Option - for SGM7D Direct Drive Motor

To order SERVOPACKs with the FT82/83 option, use the following model numbers.

SGD7S - 2R8 A 00 A 001 F82

- SGD7S: Σ-7 Series Σ-7S SERVOPACKs
- 2R8: 1st+2nd+3rd digits
- A: 4th digit
- 00: 5th+6th digits
- A: 7th digit
- 001: 8th+9th+10th digits
- F82: 11th+12th+13th digits

1st+2nd+3rd digits: Maximum Applicable Motor Capacity

Voltage	Code	Specification
Three-phase, 200 VAC	2R8*1	0.4 kW
	120*2	1.5 kW
Single-phase, 100 VAC	2R8	0.4 kW

4th digit: Voltage

Code	Specification
A	200 VAC
F	100 VAC

5th+6th digits: Interface

Code	Specification
00	Analog voltage/pulse train reference
30	MECHATROLINK-III communications reference
A0	EtherCAT communications reference

7th digit: Design Revision Order

A

8th+9th+10th digits: Hardware Options Specification

Code	Specification	Applicable Models
None	Without options	All models
000		
008	Single-phase, 200-VAC power supply input	SGD7S-120A

11th+12th+13th digits: FT Specification

Code	Specification
F82	Application function for connection to SGM7D motors
F83	Application function for connection to SGM7D motors plus application function for simple indexer*

* Only available with Analog/Pulse interface

*1. You can use these models with either a single-phase or three-phase power supply input.

*2. A model with a single-phase, 200-VAC power supply input is available as a hardware option (model: SGD7S-120A□ 0A008).

Note: Refer to the following manual for details.

📖 **Σ-7-Series AC Servo Drive Σ-7S SERVOPACK with FT/EX Specification for SGM7D Motor Product Manual (Manual No.: SIEP S800001 91)**

SERVOPACK Cables/ Peripherals

SERVOPACK Cables 504

SERVOPACK Peripheral Devices 514

SERVOPACK Cables

System Configurations (200V)

■ Σ-7S Single-axis Analog Voltage/Pulse Train Reference SERVOPACKs

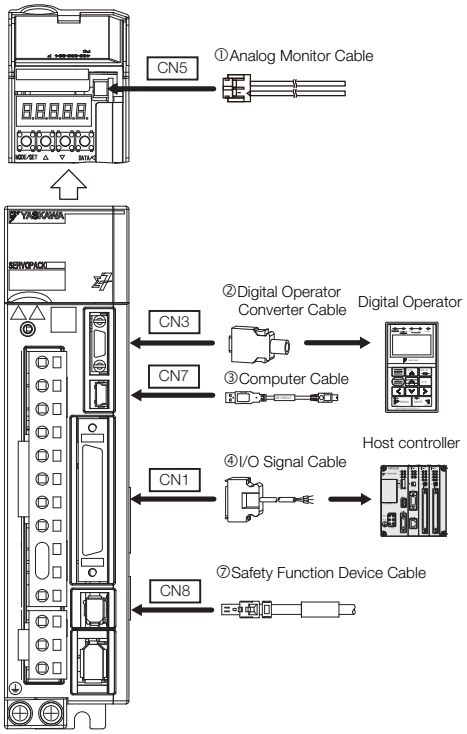

■ Σ-7S Single-axis MECHATROLINK-III Communications Reference SERVOPACKs

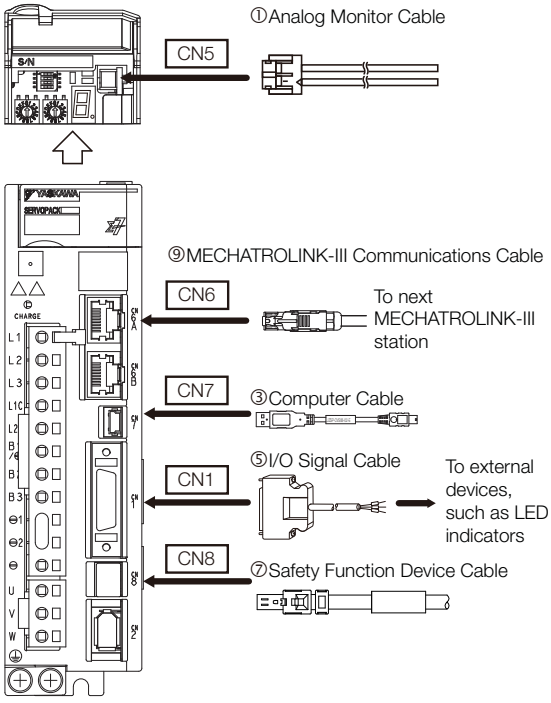

■ Σ-7S Single-axis EtherCAT Comm. Reference and Sigma-7Siec SERVOPACKs

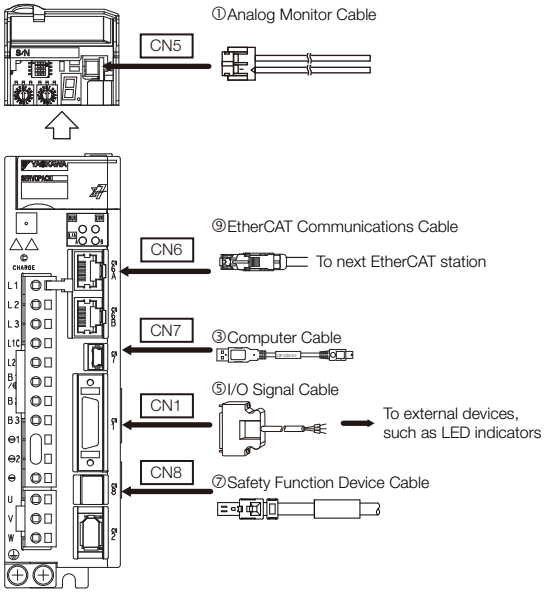

■ Σ-7W Two-axis MECHATROLINK-III Communications Reference SERVOPACKs

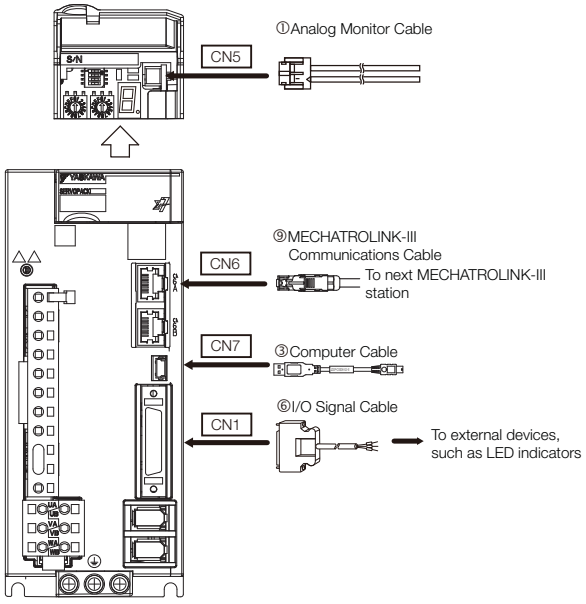

■ Σ-7S Single-axis Command Option Attachable-Type SERVOPACKs

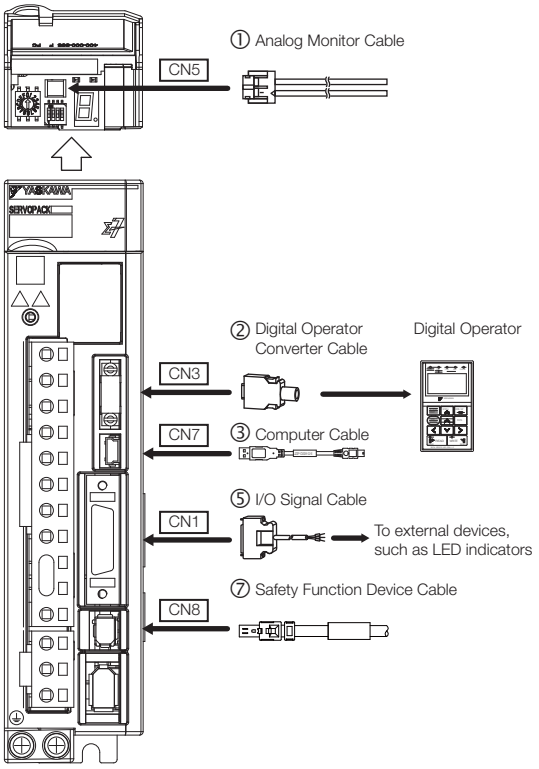

■ Command Option Module: Safety Module

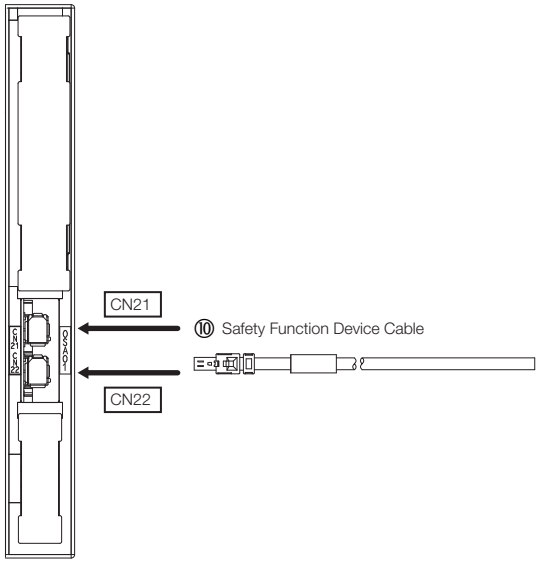

■ Command Option Module: MP2600 Module

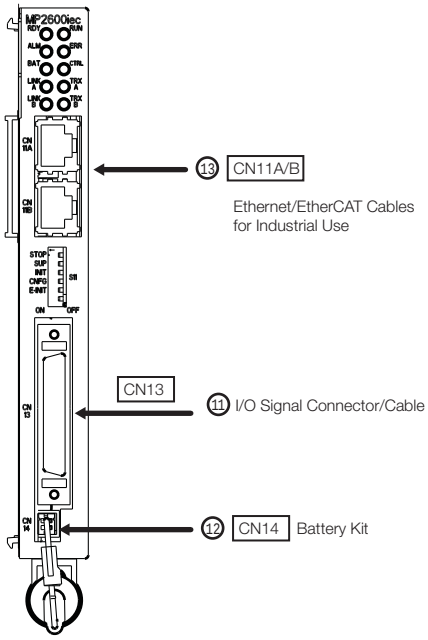

Selection Table

Important

1. Use the cable specified by Yaskawa for the Computer Cable. Operation may not be dependable with any other cable.
2. Use the cable specified by Yaskawa for the MECHATROLINK Communications Cables. Operation may not be dependable due to low noise resistance with any other cable.

Note: Refer to the following manual for the following information.
- Cable dimensional drawings and cable connection specifications
- Order numbers and specifications of individual connectors for cables

Σ-7-Series AC Servo Drive Peripheral Device Selection Manual (Manual No.: SIEP S800001 32

Code	Name		Length (L)	Order Number	Appearance/Spec
①	Analog Monitor Cable		1 m	JZSP-CA01-E	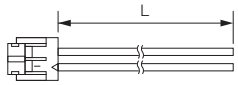
②	Digital Operator Converter Cable		0.3 m	JZSP-CVS05-A3-E*1	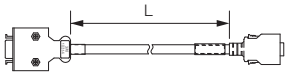
				JZSP-CVS07-A3-E*2	
③	Computer Cable		2.5 m	JZSP-CVS06-02-E	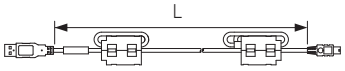
④	I/O Signal Cables	Soldered Connector Kit		JZSP-CSI9-1-E	
		Connector-Terminal Block Converter Unit (with cable)	0.5 m	JUSP-TA50PG-E	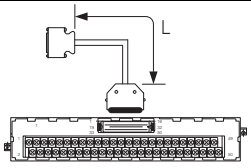
			1 m	JUSP-TA50PG-1-E	
			2 m	JUSP-TA50PG-2-E	
		Cable with Loose Wires at One End (loose wires on peripheral device end)	1 m	JZSP-CSI01-1-E	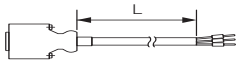
			2 m	JZSP-CSI01-2-E	
			3 m	JZSP-CSI01-3-E	
⑤	I/O Signal Cables	Soldered Connector Kit		JZSP-CSI9-2-E	
		Connector-Terminal Converter Unit	0.5 m	SBK-U-VBA-A5(B)	Terminal block & 0.5m connection cable 
			1 m	SBK-U-VBA-01(B)	
			3 m	SBK-U-VBA-03(B)	
		Cable with Loose Wires at One End (loose wires on peripheral device end)	1 m	JZSP-CSI02-1-E	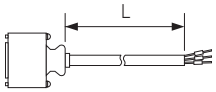
			2 m	JZSP-CSI02-2-E	
			3 m	JZSP-CSI02-3-E	

Code	Name		Length (L)	Order Number	Appearance/Spec
⑥	I/O Signal Cables	Soldered Connector Kit		DP9420007-E	
		Connector-Terminal Block Converter Unit (with cable)	0.5 m	JUSP-TA36P-E	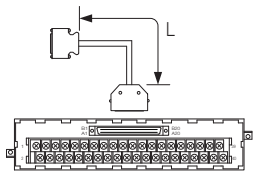
			1 m	JUSP-TA36P-1-E	
			2 m	JUSP-TA36P-2-E	
		Cable with Loose Wires at One End (peripheral device end)	1 m	JZSP-CSI03-1-E	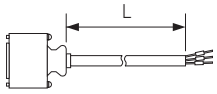
			2 m	JZSP-CSI03-2-E	
			3 m	JZSP-CSI03-3-E	
⑦	Safety Function Device Cable	Cables with Connectors*3	0.45 m	JZSP-CVH03-A45(A)-E	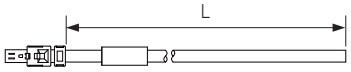
			1 m	JZSP-CVH03-01(A)-E	
			3 m	JZSP-CVH03-03(A)-E	
		Connector Kit*4		Contact Tyco Electronics Japan G.K. Name: Industrial Mini I/O D-shape Type 1 Plug Connector Kit Model number: 2013595-1	
⑨	EtherCAT or MECHATROLINK-III Communications Cables	Cables with RJ45 Connectors on Both Ends	0.2 m	CM3RRM0-00P2-E	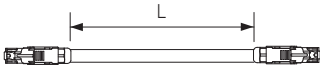
			0.5 m	CM3RRM0-00P5-E	
			1 m	JZSP-CM3RRM0-01-E	
			3 m	JZSP-CM3RRM0-03-E	
			5 m	JZSP-CM3RRM0-05-E	
			10 m	JZSP-CM3RRM0-10-E	
			20 m	JZSP-CM3RR00-20-E	
			30 m	JZSP-CM3RR00-30-E	
			40 m	JZSP-CM3RR01-40-E	
			50 m	JZSP-CM3RR01-50-E	
		Cables with RJ45 Connector on One End and IMI Connector on Other End	0.2 m	CM3RMM0-00P2-E	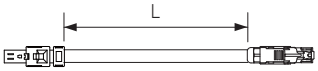
			0.5 m	CM3RMM0-00P5-E	
			1 m	JZSP-CM3RMM0-01-E	
			3 m	JZSP-CM3RMM0-03-E	
			5 m	JZSP-CM3RMM0-05-E	
			10 m	JZSP-CM3RMM0-10-E	
			20 m	JZSP-CM3RM00-20-E	
			30 m	JZSP-CM3RM00-30-E	
			40 m	JZSP-CM3RM01-40-E	
			50 m	JZSP-CM3RM01-50-E	
⑩	Safety Function Device Cables	Cables with Connectors*3	0.45 m	JZSP-CVH03-A45(A)-E	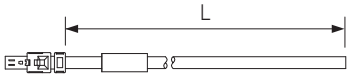
			1 m	JZSP-CVH03-01(A)-E	
			3 m	JZSP-CVH03-03(A)-E	
		Connector Kit*4		Contact Tyco Electronics Japan G.K. Name: Industrial Mini I/O D-shape Type 1 Plug Connector Kit Model number: 2013595-1	

Code	Name		Length (L)	Order Number	Appearance/Spec
⑪	MP2600iec Cables for I/O Signals (CN13)	Connector Kit		JZSP-CSI9-1E	
		Connector Terminal Converter Unit	0.5 m	CBK-U-MP2B-A5	
			1 m	CBK-U-MP2B-01	
			3 m	CBK-U-MP2B-03	
		Flying Lead Cable	0.5 m	CFC-U-MP2B-A5	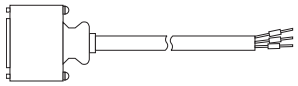
			1 m	CFC-U-MP2B-01	
			3 m	CFC-U-MP2B-03	
⑫	MP2600iec CN14 Battery Kit			SGDV-OZC02A	3.6 V Lithium battery, cable with connector, and mounting bracket for MP2600iec
⑬	MP2600iec Cables for I/O Signals (CN13)			Category: CAT5e Shield specifications: S/UTP or S/STP Cable length: 50 m maximum	

*1. This Converter Cable is required to use the Σ-III-series Digital Operator (JUSP-OP05A) for Σ-7-series SERVOPACKs.

*2. If you use a MECHATROLINK-III Communications Reference SERVOPACK, this Converter Cable is required to prevent the cable from disconnecting from the Digital Operator.

*3. When using safety functions, connect this Cable to the safety function devices.
When not using safety functions, connect the enclosed Safety Jumper Connector to the SERVOPACK.

*4. Use the Connector Kit when you make cables yourself.

◆ Connector Kit for CN13 (MP2600iec)

Use the following connector and cable to assemble the cable. The CN13 connector kit includes one case and one connector.

Connector Kit Model	Case		Connector	
	Model	Qty	Model	Qty
JZSP-CSI9-1-E	10350-52Z0-008*	1 set	10150-3000PE* (Soldered)	1

Dimensional Drawings of Case

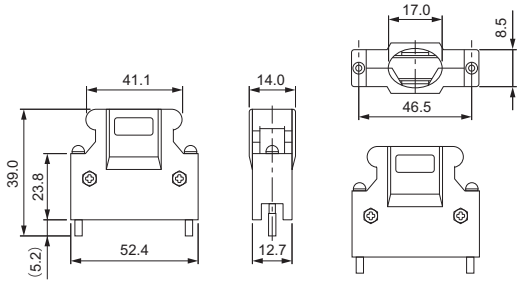

Dimensional Drawings of Connector

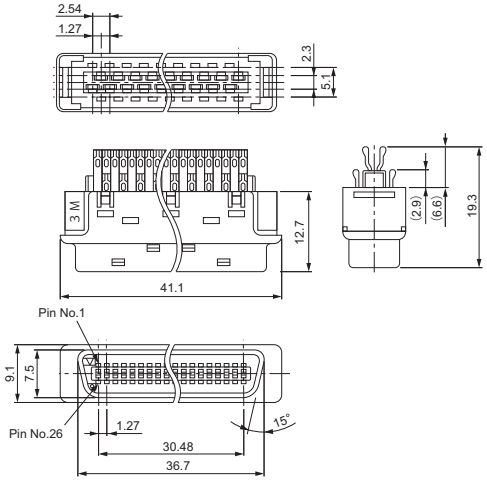

Cable Size

Item	Specifications
Cable	Use twisted pair or twisted pair shielded wire
Applicable Wires	AWG 24, 26, 28, 30
Cable Finished Diameter	16 dia. max

◆ Connector Terminal Converter Unit for CN13 (MP2600iec)

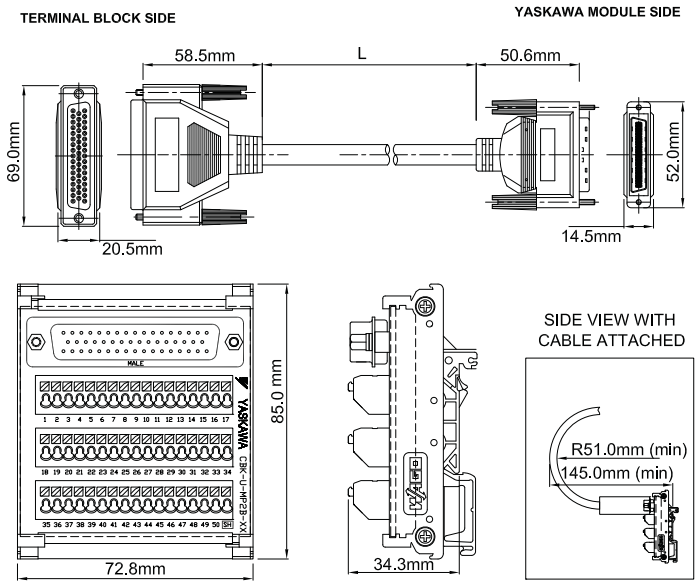

ITEM#	L = LENGTH (mm)
CBK-U-MP2B-A5	500 +/- 38.1
CBK-U-MP2B-01	1000 +/- 38.1
CBK-U-MP2B-03	3000 +/- 38.1

CABLE SPECIFICATION (mm)	
OUTER DIAMETER	8.5 +/- 0.1mm
BENDING RADIUS	6 x O.D. MINIMUM 15 x O.D. FOR LONG TERM RELIABILITY

CBK-U-MP2B-XX Function Chart for MP2600iec

Pin No.	Signal Name	I/O	Function
1	AO	O	Analog output
2	AI	I	Analog input
3	-	-	-
4	PA+	I	Phase A pulse (+)
5	PA-	I	Phase A pulse (-)
6	GND	P	Encoder input ground
7	BAT+	P	Controller SRAM Battery (+)
8	-	-	-
9	PILC5V	I	Phase-C latch pulse (-) for 5VDC input
10	PILC24V	I	Phase-C latch pulse (-) for 24VDC input
11	DO_00-	O	Digital output 0 (-)
12	DO_02-	O	Digital output 2 (-)
13	DICOM	I	Digital input common
14	DI_00	I	Digital input 0
15	DI_02	I	Digital input 2
16	DI_04	I	Digital input 4
17	DI_06	I	Digital input 6
18	DO_04-	O	Digital output 4 (-)
19	DO_06-	O	Digital output 6 (-)
20	-	-	-
21	DO_00+	O	Digital output 0 (+)
22	DO_02+	O	Digital output 2 (+)
23	DO_04+	O	Digital output 4 (+)
24	DO_06+	O	Digital output 6 (+)
25	-	-	-
26	AO_GND	O	Analog output ground
27	AI_GND	I	Analog input ground
28	-	-	-
29	PB+	I	Phase B pulse (+)
30	PB-	I	Phase B pulse (-)
31	GND	P	Encoder input ground
32	BAT-	P	Controller SRAM Battery (-)
33	-	-	-
34	PILC12V	I	Phase-C latch pulse (-) for 12VDC input
35	PIL	I	Phase-C latch pulse (+)
36	DO_01-	O	Digital output 1 (-)
37	DO_03-	O	Digital output 3 (-)
38	DICOM	I	Digital input common
39	DI_01	I	Digital input 1 - shared with pulse latch input
40	DI_03	I	Digital input 3
41	DI_05	I	Digital input 5
42	DI_07	I	Digital input 7
43	DO_05-	O	Digital output 5 (-)
44	DO_07-	O	Digital output 7 (-)
45	-	-	-
46	DO_01+	O	Digital output 1 (+)
47	DO_03+	O	Digital output 3 (+)
48	DO_05+	O	Digital output 5 (+)
49	DO_07+	O	Digital output 7 (+) - shared w/ position agreement COIN signal
50	-	-	-

I = Input, O = Output, P = Power

◆ Flying Lead Cable for CN13 (MP2600iec)

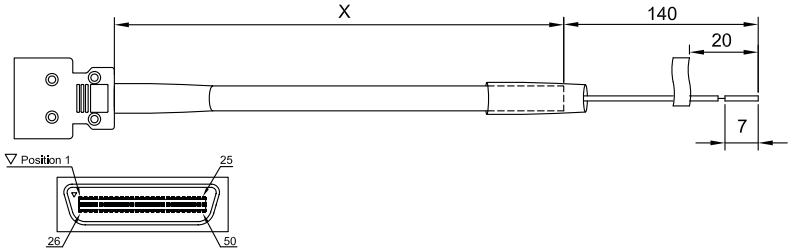

ITEM NUMBER	X = LENGTH (mm)
CFC−U−MP2B−A5	500
CFC−U−MP2B−01	1000
CFC−U−MP2B−03	3000

CABLE SPECIFICATION (mm)	
OUTER DIAMETER	8.1
BENDING RADIUS	12 O.D.

CFC-U-MP2B-XX Function Chart for MP2600iec

Pin No.	Color (Solid/Band)	Signal Name		Function
1	BLK/RED	AO	O	Analog output
2	BLK/WHT	AI	I	Analog input
3	RED/GRN	-	-	-
4	BLK/BLU	PA+	I	Phase A pulse (+)
5	BLU/BLK	PA-	I	Phase A pulse (-)
6	RED/BLU	GND	P	Encoder input ground
7	RED/WHT	BAT+	P	Controller SRAM Battery (+)
8	BLK/GRN	-	-	-
9	BLK/YEL	PILC5V	I	Phase-C latch pulse (-) for 5VDC input
10	BLK/ORG	PILC24V	I	Phase-C latch pulse (-) for 24VDC input
11	RED/YEL	DO 00-	O	Digital output 0 (-)
12	RED/BRN	DO 02-	O	Digital output 2 (-)
13	RED/ORG	DICOM	I	Digital input common
14	GRN/WHT	DI 00	I	Digital input 0
15	GRN/BLU	DI 02	I	Digital input 2
16	GRN/YEL	DI 04	I	Digital input 4
17	GRN/BRN	DI 06	I	Digital input 6
18	GRN/ORG	DO 04-	O	Digital output 4 (-)
19	WHT/BLU	DO 06-	O	Digital output 6 (-)
20	WHT/YEL	-	-	-
21	YEL/RED	DO 00+	O	Digital output 0 (+)
22	BRN/RED	DO 02+	O	Digital output 2 (+)
23	ORG/GRN	DO 04+	O	Digital output 4 (+)
24	BLU/WHT	DO 06+	O	Digital output 6 (+)
25	WHT/BRN	-	-	-
26	RED/BLK	AO GND	O	Analog output ground
27	WHT/BLK	AI GND	I	Analog input ground
28	GRN/RED	-	-	-
29	BLK/BRN	PB+	I	Phase B pulse (+)
30	BRN/BLK	PB-	I	Phase B pulse (-)
31	BLU/RED	GND	P	Encoder input ground
32	WHT/RED	BAT-	P	Controller SRAM Battery (-)
33	GRN/BLK	-	-	-
34	ORG/BLK	PILC12V	I	Phase-C latch pulse (-) for 12VDC input
35	YEL/BLK	PIL	I	Phase-C latch pulse (+)
36	WHT/ORG	DO 01-	O	Digital output 1 (-)
37	BLU/YEL	DO 03-	O	Digital output 3 (-)
38	ORG/RED	DICOM	I	Digital input common
39	WHT/GRN	DI 01	I	Digital input 1 - shared with pulse latch input
40	BLU/GRN	DI 03	I	Digital input 3
41	YEL/GRN	DI 05	I	Digital input 5
42	BRN/GRN	DI 07	I	Digital input 7
43	BLU/BRN	DO 05-	O	Digital output 5 (-)
44	BLU/ORG	DO 07-	O	Digital output 7 (-)
45	YEL/WHT	-	-	-
46	ORG/WHT	DO 01+	O	Digital output 1 (+)
47	YEL/BLU	DO 03+	O	Digital output 3 (+)
48	BRN/BLU	DO 05+	O	Digital output 5 (+)
49	ORG/BLU	DO 07+	O	Digital output 7 (+) - shared w/ position agreement COIN signal
50	BRN/WHT	-	-	-

I = Input, O = Output, P = Power

System Configurations (400V)

■ Σ-7S and Σ-7W MECHATROLINK and EtherCAT Comm. Reference SERVOPACKs

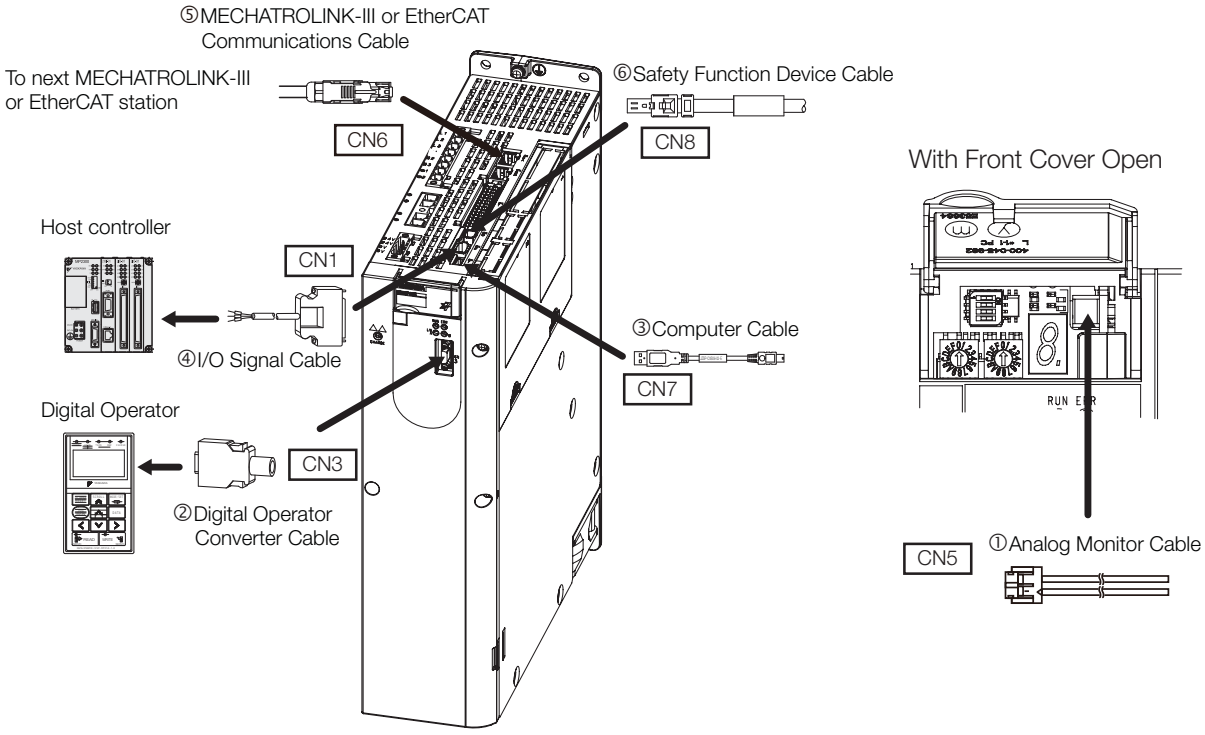

Selection Table

Important

1. Use the cable specified by Yaskawa for the Computer Cable. Operation may not be dependable with any other cable.
2. Use the cable specified by Yaskawa for the MECHATROLINK Communications Cables. Operation may not be dependable due to low noise resistance with any other cable.

Code	Name	Length (L)	Order Number	Appearance/Spec
①	Analog Monitor Cable (CN5)	1 m	JZSP-CA01-E	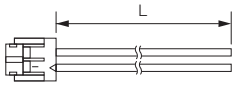
②	Digital Operator (including 1 m cable	1.0 m	JUSP-OP05A-1-E	
③	Computer Cable	2.5 m	JZSP-CVS06-02-E	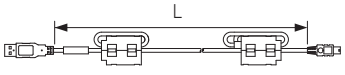

Code	Name		Length (L)	Order Number	Appearance/Spec
④	I/O Signal Cables	Soldered Connector Kit		DP9420007-E	
		Connector-Terminal Block Converter Unit (with cable)	0.5 m	JUSP-TA36P-E	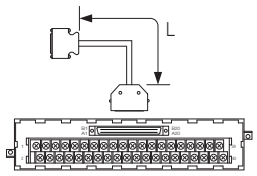
			1 m	JUSP-TA36P-1-E	
			2 m	JUSP-TA36P-2-E	
		Cable with Loose Wires at One End (peripheral device end)	1 m	JZSP-CSI03-1-E	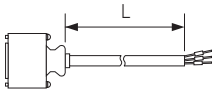
			2 m	JZSP-CSI03-2-E	
			3 m	JZSP-CSI03-3-E	
⑤	EtherCAT or MECHATROLINK-III Communications Cables	Cables with RJ45 Connectors on Both Ends	0.2 m	CM3RRM0-00P2-E	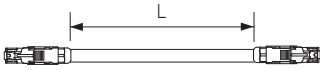
			0.5 m	CM3RRM0-00P5-E	
			1 m	JZSP-CM3RRM0-01-E	
			3 m	JZSP-CM3RRM0-03-E	
			5 m	JZSP-CM3RRM0-05-E	
			10 m	JZSP-CM3RRM0-10-E	
			20 m	JZSP-CM3RR00-20-E	
			30 m	JZSP-CM3RR00-30-E	
			40 m	JZSP-CM3RR01-40-E	
			50 m	JZSP-CM3RR01-50-E	
		Cables with RJ45 Connector on One End and IMI Connector on Other End	0.2 m	CM3RMM0-00P2-E	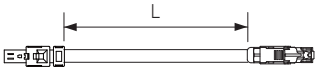
			0.5 m	CM3RMM0-00P5-E	
			1 m	JZSP-CM3RMM0-01-E	
			3 m	JZSP-CM3RMM0-03-E	
			5 m	JZSP-CM3RMM0-05-E	
			10 m	JZSP-CM3RMM0-10-E	
			20 m	JZSP-CM3RM00-20-E	
			30 m	JZSP-CM3RM00-30-E	
			40 m	JZSP-CM3RM01-40-E	
			50 m	JZSP-CM3RM01-50-E	
⑥	Safety Function Device Cable	Cables with Connectors*1	1 m	JZSP-CVH03-01-E-G	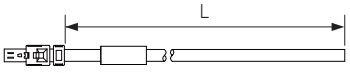
			3 m	JZSP-CVH03-03-E-G	
		Connector Kit*2		Contact Tyco Electronics Japan G.K. Name: Industrial Mini I/O D-shape Type 1 Plug Connector Kit Model number: 2013595-1	

*1. When using the safety function, connect this cable to the safety devices. Even when not using the safety function, use SERVOPACKs with the Safe Jumper Connector (model: JZSP-CVH05-E) connected.

*2. Use the connector kit when you make cables yourself.

SERVOPACK Peripheral Devices

System Configuration (200 V Models)

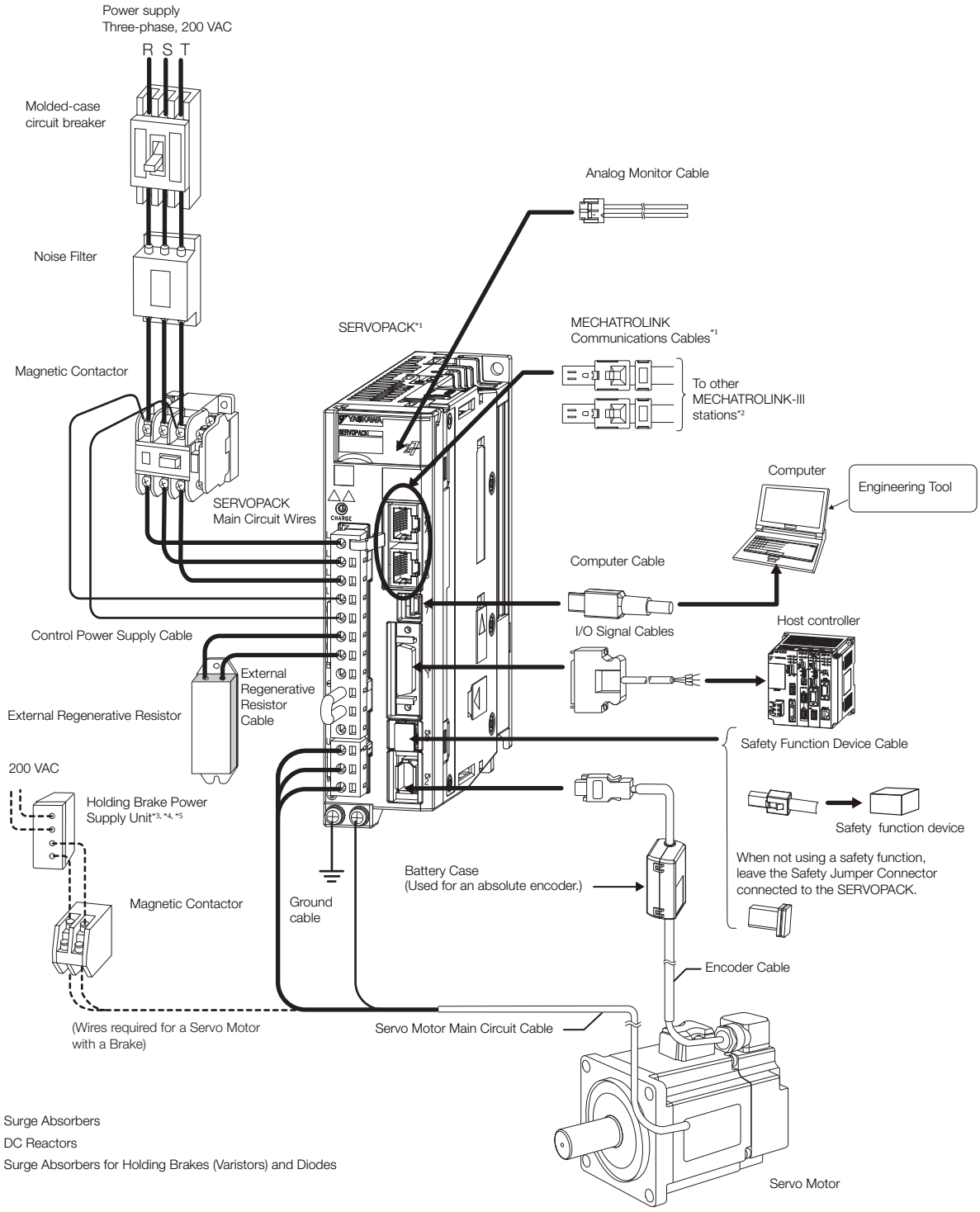

*1. The peripheral devices are described using a MECHATROLINK-III Communications Reference SERVOPACK as an example. The shapes of the connectors may be different for other interfaces.

*2. The connected devices depend on the interface.
For MECHATROLINK-II communications references: Other MECHATROLINK-II stations
For analog voltage/pulse train references: There is no CN6 connector.

*3. A Holding Brake Power Supply Unit is required to use a Servo Motor with a Holding Brake. Holding Brake Power Supply Units for 24 VDC are not provided by Yaskawa. Obtain these from other manufacturers.
Never connect Holding Brake Power Supply Units with different output voltages to a SERVOPACK. Overcurrent may result in burning in the brake.

*4. If you use a Servo Motor with a Holding Brake, select a brake relay according to the power supply voltage and current of the brake. Yaskawa does not recommend any particular brake relays. Select an appropriate brake relay using the selection method of the brake relay manufacturer.

*5. The power supply for the holding brake is not provided by Yaskawa. Select a power supply based on the holding brake specifications. If you use a 24-V brake, install a separate power supply for the 24-VDC power supply from other power supplies, such as the one for the I/O signals of the CN1 connector. If the power supply is shared, the I/O signals may malfunction.

System Configuration (400 V Models)

SGD7S Single Axis SERVOPACK (400 V)

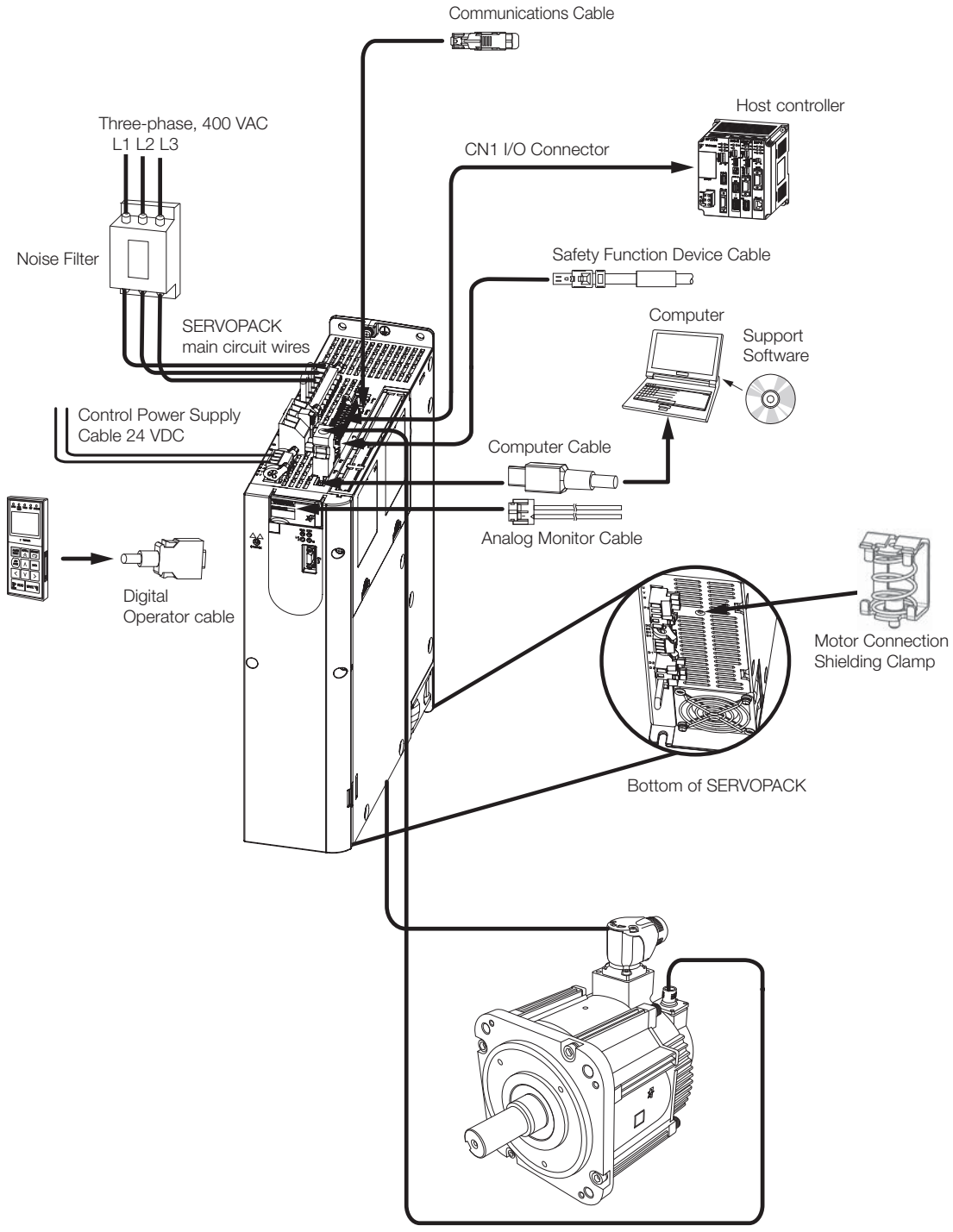

SGD7W Dual Axis SERVOPACK (400 V)

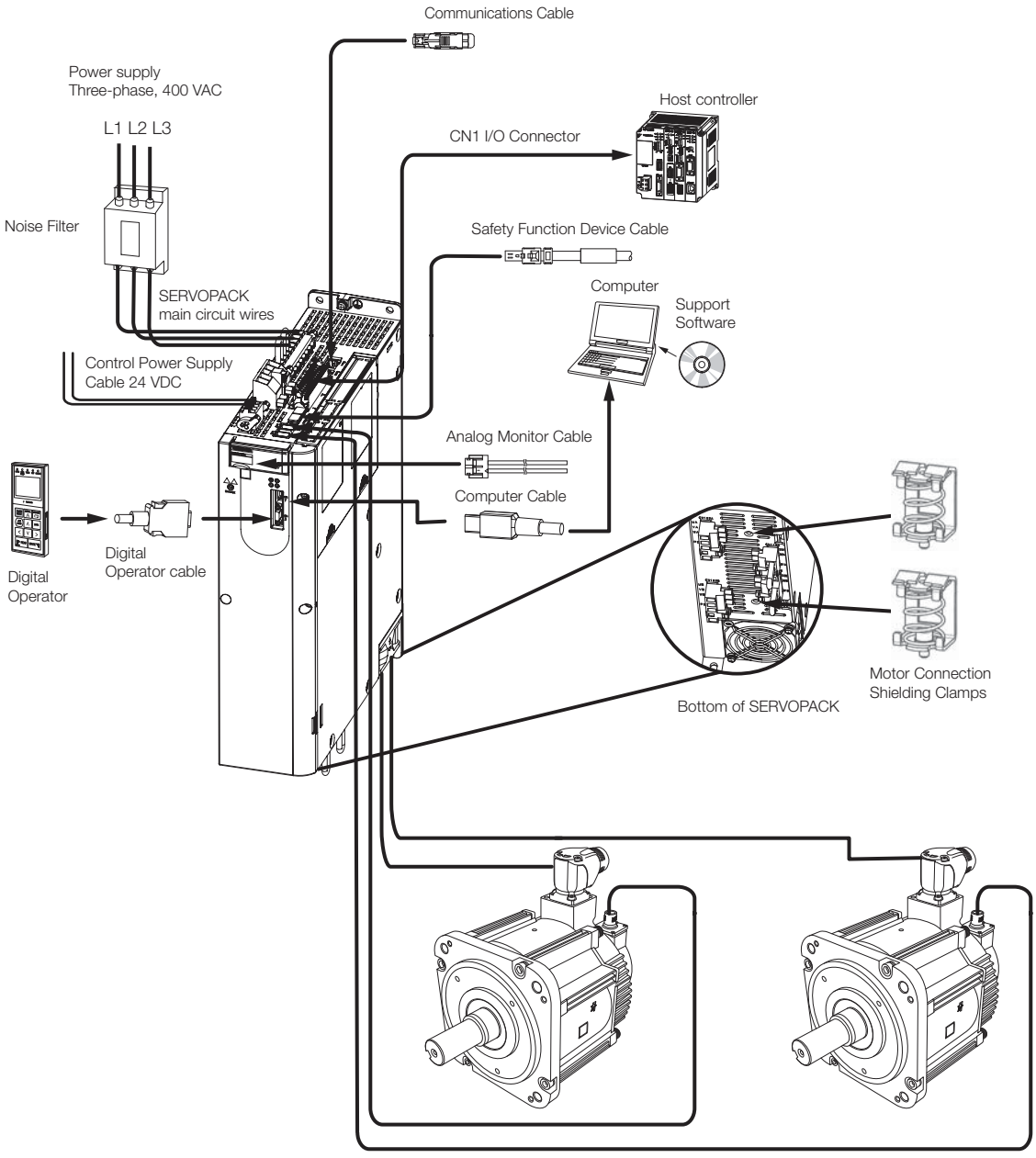

Peripheral Device Selection Table

Main Circuit Power Supply	SERVOPACK			Noise Filter*1	DC Reactor*2	Magnetic Contactor	Surge Absorber	Digital Operator
	Maximum Applicable Motor Capacity [kW]	Model SGD7S-	Model SGD7W-					
Three-phase, 200 VAC	0.05	R70A	–	HF3010C-SZC	X5061	SC-03	LT-C32G801WS	JUSP-OP05A-1-E
	0.1	R90A	–					
	0.2	1R6A	–					
	0.4	2R8A	1R6A					
	0.5	3R8A	–					
	0.75	5R5A	2R8A	HF3020C-SZC		SC-4-1		
	1.0	7R6A	–					
	1.5	120A	5R5A		X5060			
	2.0	180A	7R6A			SC-5-1		
	3.0	200A	–	HF3030C-SZC	X5059			
	5.0	330A	–	HF3050C-SZC -47EDD	X5068	SC-N1		
	6.0	470A	–		–			
	7.5	550A	–	HF3060C-SZC		SC-N2		
	11	590A	–	HF3100C-SZC		SC-N2S		
	15	780A	–			SC-N3		
Single-phase, 200 VAC	0.05	R70A	–	HF2010A-UPF	X5071	SC-03	LT-C12G801WS	
	0.1	R90A	–					
	0.2	1R6A	–		X5070			
	0.4	2R8A	1R6A		X5069			
	0.75	5R5A	2R8A	HF2020A-UPF-2BB	X5079	SC-4-1		
	1.5	–	5R5A	HF2030A-UPF-2BB	X5078	SC-5-1		
Three-phase, 400 VAC	0.5	1R9D		FESS-4009A*3	X5074	SC-4-1/G	LT-C35G102WS	JUSP-OP05A-1-E
	1.0	3R5D			X5075			
	1.5	5R4D						
	2.0	8R4D			X5076	SC-5-1/G		
	3.0	120D						
	5.0	170D		FESS-4015A*3	X5077	SC-N1/G		
	6.0	210D		FESS-4022A*3	-			
	7.5	260D			-			
	11.0	280D		FESS-4044A*3	-	-		
	15.0	370D						
	2 x 0.75		2R6D	FESS-4009A*3	X5075	SC-4-1/G		
	2 x 1.5		5R4D		X5076	SC-5-1/G		

Device	Inquiries
Noise Filters	Yaskawa Controls Co., Ltd. (200 V Models); EPA GmbH (400 V Models)
Surge Absorbers	Yaskawa Controls Co., Ltd.
DC Reactors	
Magnetic Contactors	Fuji Electric FA Components & Systems Co., Ltd.

*1. Some Noise Filters have large leakage currents. The grounding conditions also affect the size of the leakage current. If necessary, select an appropriate leakage detector or leakage breaker taking into account the grounding conditions and the leakage current from the Noise Filter.

*2. The last digit of an RoHS-compliant serial number is R. Consult with Yaskawa Controls Co., Ltd. for RoHS-compliant reactors.

Note: 1. Consult the manufacturer for details on peripheral devices.

2. Refer to the following section for information on Digital Operator Converter Cables.

☞ *Selection Table* (page 506)

3. Refer to the following manual for the following information.

- Dimensional drawings, ratings, and specifications of peripheral devices

📖 *Σ-7-Series AC Servo Drive Peripheral Device Selection Manual* (Manual No.: SIEP S800001 32)

Molded-case Circuit Breakers and Fuses

Using an AC Power Supply

Use a molded-case circuit breaker and fuse to protect the power supply line. They protect the power line by shutting OFF the circuit when overcurrent is detected. Select these devices based on the information in the following tables.

Note: The following tables also provide the net values of the current capacity and inrush current. Select a fuse and a molded-case circuit breaker that meet the following conditions.
- Main circuit and control circuit: No breaking at three times the current value given in the table for 5 s.
- Inrush current: No breaking at the current value given in the table for 20 ms.

◆ Σ-7S SERVOPACKs

Main Circuit Power Supply	Maximum Applicable Motor Capacity [kW]	SERVOPACK Model: SGD7S-	Power Supply Capacity per SERVOPACK [kVA]*	Current Capacity		Inrush Current	
				Main Circuit [Arms]*	Control Power Supply [Arms]	Main Circuit [A0-p]	Control Power Supply [A0-p]
Three-phase, 200 VAC	0.05	R70A	0.2	0.4	0.2	34	34
	0.1	R90A	0.3	0.8			
	0.2	1R6A	0.5	1.3			
	0.4	2R8A	1.0	2.5			
	0.5	3R8A	1.3	3.0			
	0.75	5R5A	1.6	4.1			
	1.0	7R6A	2.3	5.7			
	1.5	120A	3.2	7.3			
	2.0	180A	4.0	10	0.25		
	3.0	200A	5.9	15			
	5.0	330A	7.5	25	0.3	68	
	6.0	470A	10.7	29			
	7.5	550A	14.6	37			
	11	590A	21.7	54	0.4	114	
	15	780A	29.6	73			
Single-phase, 200 VAC	0.05	R70A	0.2	0.8	0.2	34	
	0.1	R90A	0.3	1.6			
	0.2	1R6A	0.6	2.4			
	0.4	2R8A	1.2	5.0			
	0.75	5R5A	1.9	8.7			
Three-phase, 400 VAC	0.5	1R9D	1.1	1.4	1.2	19	-
	1.0	3R5D	2.3	2.9			
	1.5	5R4D	3.5	4.3			
	2.0	8R4D	4.5	5.8		38	
	3.0	120D	7.1	8.6			
	5.0	170D	11.7	14.5			
	6.0	210D	12.4	17.4	1.4	68	
	7.5	260D	14.4	21.7			
	11.0	280D	21.9	31.8	1.7		
	15.0	370D	30.6	43.4			

* This is the net value at the rated load.

◆ Σ-7W SERVOPACKs

Main Circuit Power Supply	Maximum Applicable Motor Capacity per Axis [kW]	SERVOPACK Model: SGD7W-	Power Supply Capacity per SERVOPACK [kVA]*1	Current Capacity		Inrush Current	
				Main Circuit [Arms]*1	Control Power Supply [Arms]	Main Circuit [A0-p]	Control Power Supply [A0-p]
Three-phase, 200 VAC	0.2	1R6A	1.0	2.5	0.25	34	34
	0.4	2R8A	1.9	4.7			
	0.75	5R5A	3.2	7.8			
	1.0	7R6A	4.5	11			
Single-phase, 200 VAC	0.2	1R6A	1.3	5.5			
	0.4	2R8A	2.4	11			
	0.75	5R5A*2	2.7	12			
Three-phase, 400 VAC	0.75	2R6D	3.5	4.4	1.2	19	-
	1.5	5R4D	6.8	8.6		38	

*1. This is the net value at the rated load.
*2. If you use the SGD7W-5R5A with a single-phase 200-VAC power supply input, derate the load ratio to 65%. An example is given below.
If the load ratio of the first axis is 90%, use a load ratio of 40% for the second axis so that average load ratio for both axes is 65% ((90% + 40%)/2 = 65%).

Using a DC Power Supply with 200 V SERVOPACKS

This section gives the power supply specifications for using a DC power supply input. Use the Fuses given in the following tables to protect the power supply line and SERVOPACK. They protect the power line by shutting OFF the circuit when overcurrent is detected.

Note: The following tables provide the net values of the current capacity and inrush current.

◆ Σ-7S SERVOPACKs

Main Circuit Power Supply	SERVOPACK Model: SGD7S-	Power Supply Capacity per SERVOPACK [kVA]*1	Current Capacity		Inrush Current		External Fuse		
			Main Circuit [Arms]*1	Control Power Supply [Arms]	Main Circuit [A0-p]	Control Power Supply [A0-p]	Order Number*2	Current Rating [A]	Voltage Rating [Vdc]
270 VDC	R70A	0.2	0.5	0.2	34	34	3,5URGJ17/16UL	16	400
	R90A	0.3	1.0						
	1R6A	0.5	1.5						
	2R8A	1.0	3.0				3,5URGJ17/20UL	20	
	3R8A	1.3	3.8	0.2			3,5URGJ17/40UL	40	
	5R5A	1.6	4.9						
	7R6A	2.3	6.9						
	120A	3.2	11	0.2					
	180A	4.0	14	0.25			3,5URGJ17/63UL	63	
	200A	5.9	20						
	330A	7.5	34	0.3	68*3 (5 Ω external)		3,5URGJ17/100UL	100	
	470A	10.7	36				3,5URGJ23/160UL	160	
	550A	14.6	48						
	590A	21.7	68	0.4	114*3 (3 Ω external)		3,5URGJ23/200UL	200	
	780A	29.6	92						

*1. This is the net value at the rated load.
*2. These Fuses are manufactured by MERSEN Japan.
*3. If you use a DC power supply input with any of the following SERVOPACKs, externally connect an inrush current limiting circuit and use the power ON and OFF sequences recommended by Yaskawa: SGD7S-330A, -470A, -550A, -590A, or -780A.
There is a risk of equipment damage.
For information on the power ON and OFF sequences, refer to the product manual for the type of references used by your SERVOPACK.

◆ Σ-7W SERVOPACKs

Main Circuit Power Supply	SERVOPACK Model: SGD7W-	Power Supply Capacity per SERVOPACK [kVA]*1	Current Capacity		Inrush Current		External Fuse		
			Main Circuit [Arms]*1	Control Power Supply [Arms]	Main Circuit [A0-p]	Control Power Supply [A0-p]	Order Number*2	Current Rating [A]	Voltage Rating [Vdc]
270 VDC	1R6A	1	3.0	0.25	34	34	3,5URGJ17/40UL	40	400
	2R8A	1.9	5.8						
	5R5A	3.2	9.7				3,5URGJ17/63UL	63	
	7R6A	4.5	14						

*1. This is the net value at the rated load.
*2. These Fuses are manufactured by MERSEN Japan.

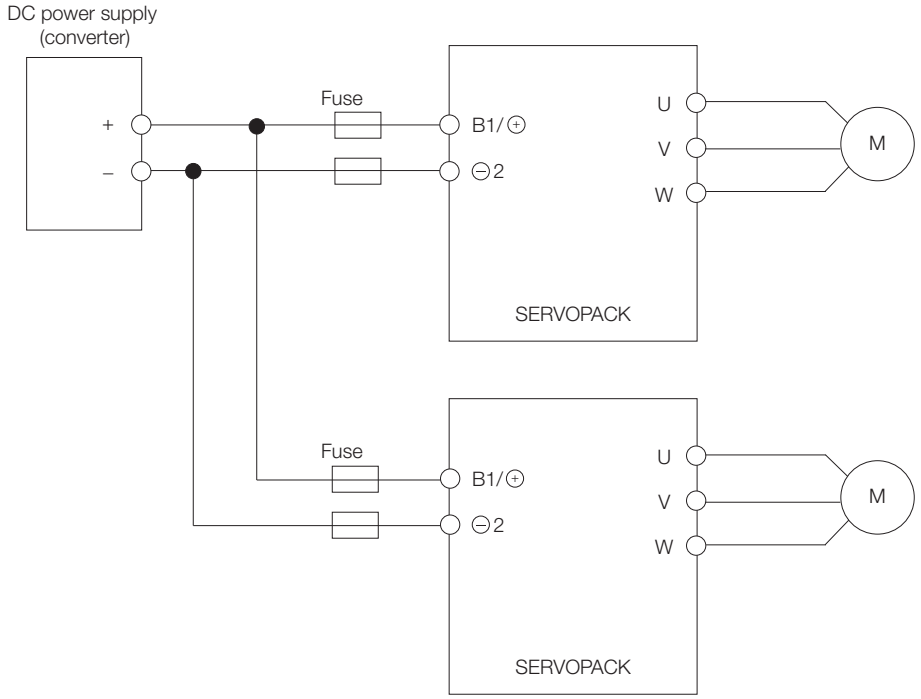

Note: If you connect more than one SERVOPACK to the same DC power supply, connect Fuses for each SERVOPACK.

SERVOPACK Main Circuit Wires

This section describes the main circuit wires for SERVOPACKs.

Important

These specifications are based on IEC/EN 61800-5-1, UL 61800-5-1, and CSA C22.2 No.274.
1. To comply with UL standards, use UL-compliant wires.
2. Use copper wires with a rated temperature of 75° or higher.
3. Use copper wires with a rated withstand voltage of 300 V or higher.

Note: To use 600-V heat-resistant polyvinyl chloride-insulated wire (HIV), use the following table as reference for the applicable wires.
- The specified wire sizes are for three bundled leads when the rated current is applied with a surrounding air temperature of 40°C.
- Select the wires according to the surrounding air temperature.

Three-phase, 200-VAC Wires for Σ-7S SERVOPACKs

SERVOPACK Model: SGD7S-	Terminals		Wire Size	Screw Size	Tightening Torque [N·m]
R70A	Main Circuit Power Supply Cable	L1, L2, L3	AWG16 (1.25 mm^2)	–	–
	Servo Motor Main Circuit Cable*	U, V, W			
	Control Power Supply Cable	L1C, L2C			
	External Regenerative Resistor Cable	B1/⊕, B2			
	Ground cable	⏚	AWG14 (2.0 mm^2) min.	M4	1.2 to 1.4
R90A	Main Circuit Power Supply Cable	L1, L2, L3	AWG16 (1.25 mm^2)	–	–
	Servo Motor Main Circuit Cable*	U, V, W			
	Control Power Supply Cable	L1C, L2C			
	External Regenerative Resistor Cable	B1/⊕, B2			
	Ground cable	⏚	AWG14 (2.0 mm^2) min.	M4	1.2 to 1.4
1R6A	Main Circuit Power Supply Cable	L1, L2, L3	AWG16 (1.25 mm^2)	–	–
	Servo Motor Main Circuit Cable*	U, V, W			
	Control Power Supply Cable	L1C, L2C			
	External Regenerative Resistor Cable	B1/⊕, B2			
	Ground cable	⏚	AWG14 (2.0 mm^2) min.	M4	1.2 to 1.4
2R8A	Main Circuit Power Supply Cable	L1, L2, L3	AWG16 (1.25 mm^2)	–	–
	Servo Motor Main Circuit Cable*	U, V, W			
	Control Power Supply Cable	L1C, L2C			
	External Regenerative Resistor Cable	B1/⊕, B2			
	Ground cable	⏚	AWG14 (2.0 mm^2) min.	M4	1.2 to 1.4

Continued on next page.

Continued from previous page.

SERVOPACK Model: SGD7S-	Terminals		Wire Size	Screw Size	Tightening Torque [N·m]
3R8A	Main Circuit Power Supply Cable	L1, L2, L3	AWG16 (1.25 mm^2)	–	–
	Servo Motor Main Circuit Cable*	U, V, W			
	Control Power Supply Cable	L1C, L2C			
	External Regenerative Resistor Cable	B1/⊕, B2			
	Ground cable	⏚	AWG14 (2.0 mm^2) min.	M4	1.2 to 1.4
5R5A	Main Circuit Power Supply Cable	L1, L2, L3	AWG16 (1.25 mm^2)	–	–
	Servo Motor Main Circuit Cable*	U, V, W			
	Control Power Supply Cable	L1C, L2C			
	External Regenerative Resistor Cable	B1/⊕, B2			
	Ground cable	⏚	AWG14 (2.0 mm^2) min.	M4	1.2 to 1.4
7R6A	Main Circuit Power Supply Cable	L1, L2, L3	AWG16 (1.25 mm^2)	–	–
	Servo Motor Main Circuit Cable*	U, V, W			
	Control Power Supply Cable	L1C, L2C			
	External Regenerative Resistor Cable	B1/⊕, B2			
	Ground cable	⏚	AWG14 (2.0 mm^2) min.	M4	1.2 to 1.4
120A	Main Circuit Power Supply Cable	L1, L2, L3	AWG14 (2.0 mm^2)	–	–
	Servo Motor Main Circuit Cable*	U, V, W			
	Control Power Supply Cable	L1C, L2C	AWG16 (1.25 mm^2)		
	External Regenerative Resistor Cable	B1/⊕, B2			
	Ground cable	⏚	AWG14 (2.0 mm^2) min.	M4	1.2 to 1.4
180A	Main Circuit Power Supply Cable	L1, L2, L3	AWG14 (2.0 mm^2)		
	Servo Motor Main Circuit Cable*	U, V, W	AWG10 (5.5 mm^2)		
	Control Power Supply Cable	L1C, L2C	AWG16 (1.25 mm^2)		
	External Regenerative Resistor Cable	B1/⊕, B2			
	Ground cable	⏚	AWG14 (2.0 mm^2) min.		
200A	Main Circuit Power Supply Cable	L1, L2, L3	AWG12 (3.5 mm^2)		
	Servo Motor Main Circuit Cable*	U, V, W	AWG10 (5.5 mm^2)		
	Control Power Supply Cable	L1C, L2C	AWG16 (1.25 mm^2)		
	External Regenerative Resistor Cable	B1/⊕, B2			
	Ground cable	⏚	AWG14 (2.0 mm^2) min.		

Continued on next page.

Continued from previous page.

SERVOPACK Model: SGD7S-	Terminals		Wire Size	Screw Size	Tightening Torque [N·m]
330A	Main Circuit Power Supply Cable	L1, L2, L3	AWG8 (8.0 mm^2)	M4	1.2 to 1.4
	Servo Motor Main Circuit Cable*	U, V, W			
	Control Power Supply Cable	L1C, L2C	AWG16 (1.25 mm^2)		
	External Regenerative Resistor Cable	B1/⊕, B2	AWG14 (2.0 mm^2)		
	Ground cable	⏚	AWG14 (2.0 mm^2) min.		
470A	Main Circuit Power Supply Cable	L1, L2, L3	AWG8 (8.0 mm^2)	M5	2.2 to 2.4
	Servo Motor Main Circuit Cable*	U, V, W	AWG6 (14 mm^2)		
	Control Power Supply Cable	L1C, L2C	AWG16 (1.25 mm^2)		
	External Regenerative Resistor Cable	B1/⊕, B2	AWG14 (2.0 mm^2)		
	Ground cable	⏚	AWG14 (2.0 mm^2) min.		
550A	Main Circuit Power Supply Cable	L1, L2, L3	AWG8 (8.0 mm^2)		
	Servo Motor Main Circuit Cable*	U, V, W	AWG4 (22 mm^2)		
	Control Power Supply Cable	L1C, L2C	AWG16 (1.25 mm^2)		
	External Regenerative Resistor Cable	B1/⊕, B2	AWG10 (5.5 mm^2)		
	Ground cable	⏚	AWG14 (2.0 mm^2) min.		
590A	Main Circuit Power Supply Cable	L1, L2, L3	AWG4 (22 mm^2)	M6	2.7 to 3.0
	Servo Motor Main Circuit Cable*	U, V, W			
	Control Power Supply Cable	L1C, L2C	AWG16 (1.25 mm^2)		
	External Regenerative Resistor Cable	B1/⊕, B2	AWG10 (5.5 mm^2)		
	Ground cable	⏚	AWG14 (2.0 mm^2) min.		
780A	Main Circuit Power Supply Cable	L1, L2, L3	AWG3 (30 mm^2)		
	Servo Motor Main Circuit Cable*	U, V, W			
	Control Power Supply Cable	L1C, L2C	AWG16 (1.25 mm^2)		
	External Regenerative Resistor Cable	B1/⊕, B2	AWG8 (8.0 mm^2)		
	Ground cable	⏚	AWG14 (2.0 mm^2) min.		

* If you do not use the recommended Servo Motor Main Circuit Cable, use this table to select wires.

Single-phase, 200-VAC Wires for Σ-7S SERVOPACKs

SERVOPACK Model: SGD7S-	Terminals		Wire Size	Screw Size	Tightening Torque [N·m]
R70A	Main Circuit Power Supply Cable	L1, L2	AWG16 (1.25 mm^2)	–	–
	Servo Motor Main Circuit Cable*	U, V, W			
	Control Power Supply Cable	L1C, L2C			
	External Regenerative Resistor Cable	B1/⊕, B2			
	Ground cable	⏚	AWG14 (2.0 mm^2) min.	M4	1.2 to 1.4
R90A	Main Circuit Power Supply Cable	L1, L2	AWG16 (1.25 mm^2)	–	–
	Servo Motor Main Circuit Cable*	U, V, W			
	Control Power Supply Cable	L1C, L2C			
	External Regenerative Resistor Cable	B1/⊕, B2			
	Ground cable	⏚	AWG14 (2.0 mm^2) min.	M4	1.2 to 1.4
1R6A	Main Circuit Power Supply Cable	L1, L2, L3	AWG16 (1.25 mm^2)	–	–
	Servo Motor Main Circuit Cable*	U, V, W			
	Control Power Supply Cable	L1C, L2C			
	External Regenerative Resistor Cable	B1/⊕, B2			
	Ground cable	⏚	AWG14 (2.0 mm^2) min.	M4	1.2 to 1.4
2R8A	Main Circuit Power Supply Cable	L1, L2, L3	AWG16 (1.25 mm^2)	–	–
	Servo Motor Main Circuit Cable*	U, V, W			
	Control Power Supply Cable	L1C, L2C			
	External Regenerative Resistor Cable	B1/⊕, B2			
	Ground cable	⏚	AWG14 (2.0 mm^2) min.	M4	1.2 to 1.4
5R5A	Main Circuit Power Supply Cable	L1, L2, L3	AWG14 (2.0 mm^2)	–	–
	Servo Motor Main Circuit Cable*	U, V, W	AWG16 (1.25 mm^2)		
	Control Power Supply Cable	L1C, L2C			
	External Regenerative Resistor Cable	B1/⊕, B2			
	Ground cable	⏚	AWG14 (2.0 mm^2) min.	M4	1.2 to 1.4

* If you do not use the recommended Servo Motor Main Circuit Cable, use this table to select wires.

DC Power Supply Wires for Σ-7S SERVOPACKs

SERVOPACK Model: SGD7S-	Terminal Symbols[*1]		Wire Size	Screw Size	Tightening Torque [N·m]
R70A	Servo Motor Main Circuit Cables	U, V, W[*2]	AWG16 (1.25 mm^2)	–	–
	Control Power Supply Cables	L1C, L2C	AWG16 (1.25 mm^2)	–	–
	Main Circuit Power Supply Cables	B1/⊕, ⊖2	AWG16 (1.25 mm^2)	–	–
	Ground Cable	⏚	AWG14 (2.0 mm^2) or larger	M4	1.2 to 1.4
R90A	Servo Motor Main Circuit Cables	U, V, W[*2]	AWG16 (1.25 mm^2)	–	–
	Control Power Supply Cables	L1C, L2C	AWG16 (1.25 mm^2)	–	–
	Main Circuit Power Supply Cables	B1/⊕, ⊖2	AWG16 (1.25 mm^2)	–	–
	Ground Cable	⏚	AWG14 (2.0 mm^2) or larger	M4	1.2 to 1.4
1R6A	Servo Motor Main Circuit Cables	U, V, W[*2]	AWG16 (1.25 mm^2)	–	–
	Control Power Supply Cables	L1C, L2C	AWG16 (1.25 mm^2)	–	–
	Main Circuit Power Supply Cables	B1/⊕, ⊖2	AWG16 (1.25 mm^2)	–	–
	Ground Cable	⏚	AWG14 (2.0 mm^2) or larger	M4	1.2 to 1.4
2R8A	Servo Motor Main Circuit Cables	U, V, W[*2]	AWG16 (1.25 mm^2)	–	–
	Control Power Supply Cables	L1C, L2C	AWG16 (1.25 mm^2)	–	–
	Main Circuit Power Supply Cables	B1/⊕, ⊖2	AWG16 (1.25 mm^2)	–	–
	Ground Cable	⏚	AWG14 (2.0 mm^2) or larger	M4	1.2 to 1.4
3R8A	Servo Motor Main Circuit Cables	U, V, W[*2]	AWG16 (1.25 mm^2)	–	–
	Control Power Supply Cables	L1C, L2C	AWG16 (1.25 mm^2)	–	–
	Main Circuit Power Supply Cables	B1/⊕, ⊖2	AWG16 (1.25 mm^2)	–	–
	Ground Cable	⏚	AWG14 (2.0 mm^2) or larger	M4	1.2 to 1.4
5R5A	Servo Motor Main Circuit Cables	U, V, W[*2]	AWG16 (1.25 mm^2)	–	–
	Control Power Supply Cables	L1C, L2C	AWG16 (1.25 mm^2)	–	–
	Main Circuit Power Supply Cables	B1/⊕, ⊖2	AWG16 (1.25 mm^2)	–	–
	Ground Cable	⏚	AWG14 (2.0 mm^2) or larger	M4	1.2 to 1.4
7R6A	Servo Motor Main Circuit Cables	U, V, W[*2]	AWG16 (1.25 mm^2)	–	–
	Control Power Supply Cables	L1C, L2C	AWG16 (1.25 mm^2)	–	–
	Main Circuit Power Supply Cables	B1/⊕, ⊖2	AWG16 (1.25 mm^2)	–	–
	Ground Cable	⏚	AWG14 (2.0 mm^2) or larger	M4	1.2 to 1.4

Continued on next page.

Continued from previous page.

SERVOPACK Model: SGD7S-	Terminal Symbols[*1]		Wire Size	Screw Size	Tightening Torque [N·m]
120A	Servo Motor Main Circuit Cables	U, V, W[*2]	AWG14 (2.0 mm^2)	–	–
	Control Power Supply Cables	L1C, L2C	AWG16 (1.25 mm^2)	–	–
	Main Circuit Power Supply Cables	B1/⊕, ⊖2	AWG14 (2.0 mm^2)	–	–
	Ground Cable	⏚	AWG14 (2.0 mm^2) or larger	M4	1.2 to 1.4
180A	Servo Motor Main Circuit Cables	U, V, W[*2]	AWG10 (5.5 mm^2)	M4	1.2 to 1.4
	Control Power Supply Cables	L1C, L2C	AWG16 (1.25 mm^2)	M4	1.2 to 1.4
	Main Circuit Power Supply Cables	B1/⊕, ⊖2	AWG10 (5.5 mm^2)	M4	1.2 to 1.4
	Ground Cable	⏚	AWG14 (2.0 mm^2) or larger	M4	1.2 to 1.4
200A	Servo Motor Main Circuit Cables	U, V, W[*2]	AWG10 (5.5 mm^2)	M4	1.2 to 1.4
	Control Power Supply Cables	L1C, L2C	AWG16 (1.25 mm^2)	M4	1.2 to 1.4
	Main Circuit Power Supply Cables	B1/⊕, ⊖2	AWG10 (5.5 mm^2)	M4	1.2 to 1.4
	Ground Cable	⏚	AWG14 (2.0 mm^2) or larger	M4	1.2 to 1.4
330A	Servo Motor Main Circuit Cables	U, V, W	AWG8 (8.0 mm^2)	M4	1.2 to 1.4
	Control Power Supply Cables	L1C, L2C	AWG16 (1.25 mm^2)	M4	1.2 to 1.4
	Main Circuit Power Supply Cables	B1/⊕, ⊖2	AWG8 (8.0 mm^2)	M4	1.2 to 1.4
	Ground Cable	⏚	AWG14 (2.0 mm^2) or larger	M4	1.2 to 1.4
470A	Servo Motor Main Circuit Cables	U, V, W	AWG6 (14 mm^2)	M5	2.2 to 2.4
	Control Power Supply Cables	L1C, L2C	AWG16 (1.25 mm^2)	M5	2.2 to 2.4
	Main Circuit Power Supply Cables	B1/⊕, ⊖2	AWG8 (8.0 mm^2)	M5	2.2 to 2.4
	Ground Cable	⏚	AWG14 (2.0 mm^2) or larger	M5	2.2 to 2.4
550A	Servo Motor Main Circuit Cables	U, V, W	AWG4 (22 mm^2)	M5	2.2 to 2.4
	Control Power Supply Cables	L1C, L2C	AWG16 (1.25 mm^2)	M5	2.2 to 2.4
	Main Circuit Power Supply Cables	B1/⊕, ⊖2	AWG6 (14 mm^2)	M5	2.2 to 2.4
	Ground Cable	⏚	AWG14 (2.0 mm^2) or larger	M5	2.2 to 2.4
590A	Servo Motor Main Circuit Cables	U, V, W	AWG4 (22 mm^2)	M6	2.7 to 3.0
	Control Power Supply Cables	L1C, L2C	AWG16 (1.25 mm^2)	M6	2.7 to 3.0
	Main Circuit Power Supply Cables	B1/⊕, ⊖2	AWG3 (30 mm^2)	M6	2.7 to 3.0
	Ground Cable	⏚	AWG14 (2.0 mm^2) or larger	M6	2.7 to 3.0

Continued on next page.

Continued from previous page.

SERVOPACK Model: SGD7S-	Terminal Symbols*1		Wire Size	Screw Size	Tightening Torque [N·m]
780A	Servo Motor Main Circuit Cables	U, V, W	AWG3 (30 mm^2)	M6	2.7 to 3.0
	Control Power Supply Cables	L1C, L2C	AWG16 (1.25 mm^2)	M6	2.7 to 3.0
	Main Circuit Power Supply Cables	B1/⊕, ⊖2	AWG3 (30 mm^2)	M6	2.7 to 3.0
	Ground Cable	⏚	AWG14 (2.0 mm^2) or larger	M6	2.7 to 3.0

*1. Do not wire the following terminals: L1, L2, L3, B2, B3, ⊖1, and ⊖ terminals.
*2. If you do not use the recommended Servo Motor Main Circuit Cable, use this table to select wires.

Three-phase, 400-VAC Wires for Σ-7S SERVOPACKs

SERVOPACK Model: SGD7S-	Terminals		Wire Size
1R9D	Main Circuit Power Supply Cable	L1, L2, L3	AWG16 (1.5 mm^2)
	Servo Motor Main Circuit Cable*	U, V, W	
	Control Power Supply Cable	24V, 0V	
	External Regenerative Resistor Cable	B1/⊕, B2	
	Ground cable	⏚	
3R5D	Main Circuit Power Supply Cable	L1, L2, L3	
	Servo Motor Main Circuit Cable*	U, V, W	
	Control Power Supply Cable	24V, 0V	
	External Regenerative Resistor Cable	B1/⊕, B2	
	Ground cable	⏚	
5R4D	Main Circuit Power Supply Cable	L1, L2, L3	
	Servo Motor Main Circuit Cable*	U, V, W	
	Control Power Supply Cable	24V, 0V	
	External Regenerative Resistor Cable	B1/⊕, B2	
	Ground cable	⏚	
8R4D	Main Circuit Power Supply Cable	L1, L2, L3	AWG14 (2.5 mm^2)
	Servo Motor Main Circuit Cable*	U, V, W	
	Control Power Supply Cable	24V, 0V	AWG16 (1.5 mm^2)
	External Regenerative Resistor Cable	B1/⊕, B2	
	Ground cable	⏚	AWG14 (2.5 mm^2)
120D	Main Circuit Power Supply Cable	L1, L2, L3	AWG14 (2.5 mm^2)
	Servo Motor Main Circuit Cable*	U, V, W	
	Control Power Supply Cable	24V, 0V	AWG16 (1.5 mm^2)
	External Regenerative Resistor Cable	B1/⊕, B2	
	Ground cable	⏚	AWG14 (2.5 mm^2)
170D	Main Circuit Power Supply Cable	L1, L2, L3	AWG12 (4.0 mm^2)
	Servo Motor Main Circuit Cable*	U, V, W	
	Control Power Supply Cable	24V, 0V	AWG16 (1.5 mm^2)
	External Regenerative Resistor Cable	B1/⊕, B2	AWG14 (2.5 mm^2)
	Ground cable	⏚	AWG12 (4.0 mm^2)

Continued from previous page.

SERVOPACK Model: SGD7S-	Terminals		Wire Size
210D	Main Circuit Power Supply Cable	L1, L2, L3	AWG12 (4.0 mm^2)
	Servo Motor Main Circuit Cable*	U, V, W	AWG10 (4.0 mm^2)
	Control Power Supply Cable	24V, 0V	AWG16 (1.5 mm^2)
	External Regenerative Resistor Cable	B1/⊕, B2	AWG12 (4.0 mm^2)
	Ground cable	⏚	
260D	Main Circuit Power Supply Cable	L1, L2, L3	AWG10 (4.0 mm^2)
	Servo Motor Main Circuit Cable*	U, V, W	
	Control Power Supply Cable	24V, 0V	AWG16 (1.5 mm^2)
	External Regenerative Resistor Cable	B1/⊕, B2	AWG12 (4.0 mm^2)
	Ground cable	⏚	AWG10 (4.0 mm^2)
280D	Main Circuit Power Supply Cable	L1, L2, L3	AWG8 (10 mm^2)
	Servo Motor Main Circuit Cable*	U, V, W	
	Control Power Supply Cable	24V, 0V	AWG16 (1.5 mm^2)
	External Regenerative Resistor Cable	B1/⊕, B2	AWG10 (4.0 mm^2)
	Ground cable	⏚	AWG8 (10 mm^2)
370D	Main Circuit Power Supply Cable	L1, L2, L3	AWG8 (10 mm^2)
	Servo Motor Main Circuit Cable*	U, V, W	
	Control Power Supply Cable	24V, 0V	AWG16 (1.5 mm^2)
	External Regenerative Resistor Cable	B1/⊕, B2	AWG8 (10 mm^2)
	Ground cable	⏚	

Three-phase, 200-VAC Wires for Σ-7W SERVOPACKs

SERVOPACK Model: SGD7W-	Terminals		Wire Size	Screw Size	Tightening Torque [N·m]
1R6A	Main Circuit Power Supply Cable	L1, L2, L3	AWG16 (1.25 mm^2)	–	–
	Servo Motor Main Circuit Cable*	UA, VA, WA, UB, VB, WB			
	Control Power Supply Cable	L1C, L2C			
	External Regenerative Resistor Cable	B1/⊕, B2			
	Ground cable	⏚	AWG14 (2.0 mm^2) min.	M4	1.2 to 1.4
2R8A	Main Circuit Power Supply Cable	L1, L2, L3	AWG14 (2.0 mm^2)	–	–
	Servo Motor Main Circuit Cable*	UA, VA, WA, UB, VB, WB	AWG16 (1.25 mm^2)		
	Control Power Supply Cable	L1C, L2C			
	External Regenerative Resistor Cable	B1/⊕, B2			
	Ground cable	⏚	AWG14 (2.0 mm^2) min.	M4	1.2 to 1.4
5R5A	Main Circuit Power Supply Cable	L1, L2, L3	AWG14 (2.0 mm^2)	–	–
	Servo Motor Main Circuit Cable*	UA, VA, WA, UB, VB, WB	AWG16 (1.25 mm^2)		
	Control Power Supply Cable	L1C, L2C			
	External Regenerative Resistor Cable	B1/⊕, B2	AWG14 (2.0 mm^2)		
	Ground cable	⏚	AWG14 (2.0 mm^2) min.	M4	1.2 to 1.4
7R6A	Main Circuit Power Supply Cable	L1, L2, L3	AWG14 (2.0 mm^2)	–	–
	Servo Motor Main Circuit Cable*	UA, VA, WA, UB, VB, WB	AWG16 (1.25 mm^2)		
	Control Power Supply Cable	L1C, L2C			
	External Regenerative Resistor Cable	B1/⊕, B2	AWG14 (2.0 mm^2)		
	Ground cable	⏚	AWG14 (2.0 mm^2) min.	M4	1.2 to 1.4

* If you do not use the recommended Servo Motor Main Circuit Cable, use this table to select wires.

Single-phase, 200-VAC Wires for Σ-7W SERVOPACKs

SERVOPACK Model: SGD7W-	Terminals		Wire Size	Screw Size	Tightening Torque [N·m]
1R6A	Main Circuit Power Supply Cable	L1, L2, L3	AWG16 (1.25 mm^2)	–	–
	Servo Motor Main Circuit Cable*	UA, VA, WA, UB, VB, WB			
	Control Power Supply Cable	L1C, L2C			
	External Regenerative Resistor Cable	B1/⊕, B2			
	Ground cable	⏚	AWG14 (2.0 mm^2) min.	M4	1.2 to 1.4
2R8A	Main Circuit Power Supply Cable	L1, L2, L3	AWG14 (2.0 mm^2)	–	–
	Servo Motor Main Circuit Cable*	UA, VA, WA, UB, VB, WB	AWG16 (1.25 mm^2)		
	Control Power Supply Cable	L1C, L2C			
	External Regenerative Resistor Cable	B1/⊕, B2			
	Ground cable	⏚	AWG14 (2.0 mm^2) min.	M4	1.2 to 1.4
5R5A	Main Circuit Power Supply Cable	L1, L2, L3	AWG14 (2.0 mm^2)	–	–
	Servo Motor Main Circuit Cable*	UA, VA, WA, UB, VB, WB	AWG16 (1.25 mm^2)		
	Control Power Supply Cable	L1C, L2C			
	External Regenerative Resistor Cable	B1/⊕, B2	AWG14 (2.0 mm^2)		
	Ground cable	⏚	AWG14 (2.0 mm^2) min.	M4	1.2 to 1.4

* If you do not use the recommended Servo Motor Main Circuit Cable, use this table to select wires.

DC Power Supply Wires for Σ-7W SERVOPACKs

SERVOPACK Model: SGD7W-	Terminal Symbols[*1]		Wire Size	Screw Size	Tightening Torque [N·m]
1R6A	Servo Motor Main Circuit Cables	UA, VA, WA, UB, VB, WB[*2]	AWG16 (1.25 mm^2)	–	–
	Control Power Supply Cables	L1C, L2C	AWG16 (1.25 mm^2)	–	–
	Main Circuit Power Supply Cables	B1/⊕, ⊖2	AWG16 (1.25 mm^2)	–	–
	Ground Cable	⏚	AWG14 (2.0 mm^2) or larger	M4	1.2 to 1.4
2R8A	Servo Motor Main Circuit Cables	UA, VA, WA, UB, VB, WB[*2]	AWG16 (1.25 mm^2)	–	–
	Control Power Supply Cables	L1C, L2C	AWG16 (1.25 mm^2)	–	–
	Main Circuit Power Supply Cables	B1/⊕, ⊖2	AWG16 (1.25 mm^2)	–	–
	Ground Cable	⏚	AWG14 (2.0 mm^2) or larger	M4	1.2 to 1.4

Continued on next page.

Continued from previous page.

SERVOPACK Model: SGD7W-	Terminal Symbols*1		Wire Size	Screw Size	Tightening Torque [N·m]
5R5A	Servo Motor Main Circuit Cables	UA, VA, WA, UB, VB, WB*2	AWG16 (1.25 mm^2)	–	–
	Control Power Supply Cables	L1C, L2C	AWG16 (1.25 mm^2)	–	–
	Main Circuit Power Supply Cables	B1/⊕, ⊖2	AWG14 (2.0 mm^2)	–	–
	Ground Cable	⏚	AWG14 (2.0 mm^2) or larger	M4	1.2 to 1.4
7R6A	Servo Motor Main Circuit Cables	UA, VA, WA, UB, VB, WB*2	AWG16 (1.25 mm^2)	–	–
	Control Power Supply Cables	L1C, L2C	AWG16 (1.25 mm^2)	–	–
	Main Circuit Power Supply Cables	B1/⊕, ⊖2	AWG14 (2.0mm^2)	–	–
	Ground Cable	⏚	AWG14 (2.0 mm^2) or larger	M4	1.2 to 1.4

*1. Do not wire the following terminals: L1, L2, L3, B2, B3, ⊖1, and ⊖ terminals.
*2. If you do not use the recommended Servo Motor Main Circuit Cable, use this table to select wires.

Three-phase, 400-VAC Wires for Σ-7W SERVOPACKs

SERVOPACK Model: SGD7W-	Terminals		Wire Size
2R6D	Main Circuit Power Supply Cable	L1, L2, L3	AWG14 (2.0 mm^2)
	Servo Motor Main Circuit Cable*	U, V, W	AWG16 (1.25 mm^2)
	Control Power Supply Cable	24V, 0V	
	External Regenerative Resistor Cable	B1/⊕, B2	
	Ground cable	⏚	AWG14 (2.0 mm^2)
5R4D	Main Circuit Power Supply Cable	L1, L2, L3	AWG14 (2.0 mm^2)
	Servo Motor Main Circuit Cable*	U, V, W	AWG16 (1.25 mm^2)
	Control Power Supply Cable	24V, 0V	
	External Regenerative Resistor Cable	B1/⊕, B2	
	Ground cable	⏚	AWG14 (2.0 mm^2)

Wire Types

The following table shows the wire sizes and allowable currents for three bundled leads.

HIV Specifications*		Allowable Current at Surrounding Air Temperatures [Arms]		
Nominal Cross-sectional Area [mm^2]	Configuration [Wires/mm^2]	30°C	40°C	50°C
0.9	37/0.18	15	13	11
1.25	50/0.15	16	14	12
2.0	7/0.6	23	20	17
3.5	7/0.8	32	28	24
5.5	7/1.0	42	37	31
8.0	7/1.2	52	46	39
14.0	7/1.6	75	67	56
22.0	7/2.0	98	87	73
38.0	7/2.6	138	122	103

* This is reference data based on JIS C3317 600-V-grade heat-resistant polyvinyl chloride-insulated wires (HIV).

Crimp Terminals and Insulating Sleeves

If you use crimp terminals for wiring, use insulating sleeves. Do not allow the crimp terminals to come close to adjacent terminals or the case.

To comply with UL standards, you must use UL-compliant closed-loop crimp terminals and insulating sleeves for the main circuit terminals. Use the tool recommended by the crimp terminal manufacturer to attach the crimp terminals.

The following tables give the recommended tightening torques, closed-loop crimp terminals, and insulating sleeves in sets. Use the set that is suitable for your model and wire size.

Σ-7S SERVOPACKs for Use with Three-Phase, 200-VAC and DC Power Supply

SERVOPACK Model: SGD7S-	Main Circuit Terminals	Screw Size	Tightening Torque [N·m]	Crimp Terminal Horizontal Width	Recommended Wire Size	Crimp Terminal Model (From J.S.T. Mfg. Co., Ltd.)	Crimping Tool (From J.S.T. Mfg. Co., Ltd.)	Die (From J.S.T. Mfg. Co., Ltd.)	Insulating Sleeve Model (Tokyo Dip Co., Ltd.)
R70A, R90A, 1R6A, 2R8A, 3R8A, 5R5A, 7R6A, or 120A	Connector	–							
	⏚	M4	1.2 to 1.4	10 mm max.	AWG14 (2.0 mm²)	R2-4	YHT-2210	–	–
180A or 200A	Terminal block	M4	1.2 to 1.4	7.7 mm max.	AWG10 (5.5 mm²)	5.5-S4	YHT-2210	–	TP-005
					AWG14 (2.0 mm²)	2-M4		–	TP-003
					AWG16 (1.25 mm²)			–	
	⏚	M4	1.2 to 1.4	10 mm max.	AWG14 (2.0 mm²)	R2-4	YHT-2210	–	–
330A	Terminal block	M4	1.2 to 1.4	9.9 mm max.	AWG8 (8.0 mm²)	8-4NS	YPT-60N	TD-121 TD-111	TP-008
					AWG14 (2.0 mm²)	R2-4	YHT-2210	–	TP-003
					AWG16 (1.25 mm²)			–	
	⏚	M4	1.2 to 1.4	10 mm max.	AWG14 (2.0 mm²)	R2-4	YHT-2210	–	–
470A or 550A	Terminal block	M5	2.2 to 2.4	13 mm max.	AWG4 (22 mm²)	22-S5	YPT-60N	TD-123 TD-112	TP-022
					AWG6 (14 mm²)	R14-5		TD-122 TD-111	TP-014
					AWG8 (8.0 mm²)	R8-5		TD-121 TD-111	TP-008
					AWG10 (5.5 mm²)	R5.5-5	YHT-2210	–	TP-005
					AWG14 (2.0 mm²)	R2-5		–	TP-003
					AWG16 (1.25 mm²)			–	
	⏚	M5	2.2 to 2.4	12 mm max.	AWG14 (2.0 mm²)	R2-5	YHT-2210	–	–

Continued on next page.

Continued from previous page.

SERVOPACK Model: SGD7S-	Main Circuit Terminals	Screw Size	Tightening Torque [N·m]	Crimp Terminal Horizontal Width	Recommended Wire Size	Crimp Terminal Model (From J.S.T. Mfg. Co., Ltd.)	Crimping Tool	Die	Insulating Sleeve Model (Tokyo Dip Co., Ltd.)
590A or 780A	Terminal block	M6	2.7 to 3.0	18 mm max.	AWG3 (30 mm^2)	38-S6	YPT-60N	TD-124 TD-112	TP-038
					AWG4 (22 mm^2)	R22-6		TD-123 TD-112	TP-022
					AWG8 (8.0 mm^2)	R8-6		TD-121 TD-111	TP-008
					AWG10 (5.5 mm^2)	R5.5-6	YHT-2210	–	TP-005
					AWG14 (2.0 mm^2)	R2-6		–	TP-003
					AWG16 (1.25 mm^2)			–	
	⏚	M6	2.7 to 3.0	12 mm max.	AWG14 (2.0 mm^2)	R2-6	YHT-2210	–	–

Σ-7S SERVOPACKs for Use with Single-Phase, 200-VAC Power Supply

SERVOPACK Model: SGD7S-	Main Circuit Terminals	Screw Size	Tightening Torque [N·m]	Crimp Terminal Horizontal Width	Recommended Wire Size	Crimp Terminal Model (From J.S.T. Mfg. Co., Ltd.)	Crimping Tool	Die	Insulating Sleeve Model (Tokyo Dip Co., Ltd.)
R70A, R90A, 1R6A, 2R8A, or 5R5A	Connector	–							
	⏚	M4	1.2 to 1.4	10 mm max.	AWG14 (2.0 mm^2)	R2-4	YHT-2210	–	–

Σ-7W SERVOPACKs for Use with Three-Phase, 200-VAC and DC Power Supply

SERVOPACK Model: SGD7W-	Main Circuit Terminals	Screw Size	Tightening Torque [N·m]	Crimp Terminal Horizontal Width	Recommended Wire Size	Crimp Terminal Model (From J.S.T. Mfg. Co., Ltd.)	Crimping Tool	Die	Insulating Sleeve Model (Tokyo Dip Co., Ltd.)
1R6A, 2R8A, 5R5A, or 7R6A	Connector	–							
	⏚	M4	1.2 to 1.4	10 mm max.	AWG14 (2.0 mm^2)	R2-4	YHT-2210	–	–

Σ-7W SERVOPACKs for Use with Single-Phase, 200-VAC Power Supply

SERVOPACK Model: SGD7W-	Main Circuit Terminals	Screw Size	Tightening Torque [N·m]	Crimp Terminal Horizontal Width	Recommended Wire Size	Crimp Terminal Model (From J.S.T. Mfg. Co., Ltd.)	Crimping Tool	Die	Insulating Sleeve Model (Tokyo Dip Co., Ltd.)
1R6A, 2R8A, or 5R5A	Connector	–							
	⏚	M4	1.2 to 1.4	10 mm max.	AWG14 (2.0 mm^2)	R2-4	YHT-2210	–	–

Surge Absorbers (Varistors) and Diodes for Holding Brake Power Supplies

Surge Absorbers (varistors) and Diodes for holding brake power supplies help prevent damage to brake coils caused by voltage surges.

If you use a Servo Motor with a Holding Brake and switch the brake power supply circuit on the DC side, connect a Surge Absorber (varistor) or Diode that is suitable for the brake power supply voltage and current.

Note

- When you select a Surge Absorber, varistor, or Diode for your application, consider the service life and test all operations, including the brake timing, before you use the Servo Motor.
- If you connect an SSR (i.e., a semiconductor relay) to switch the brake circuit, use a Diode.
- If you connect a Diode, more time is required to brake than with a Surge Absorber. (Refer to the following figure.) If you use a diode, consider this in the application.

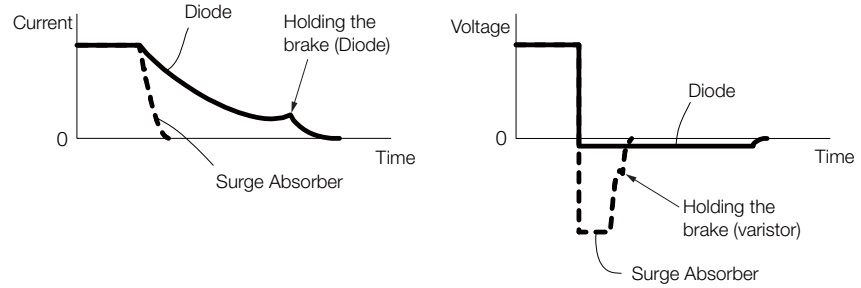

◆ Surge Absorbers (Varistors) for Holding Brake Power Supplies

Use the following table as reference in selecting a Surge Absorber. Elements were selected for a Surge Absorber surrounding air temperature range of -20°C to 60°C and an ON/OFF switching frequency of 10 times or less per minute. The information in this table is for reference only, and does not ensure operation in combination with the holding brake.

Holding Brake Power Supply Voltage		24 VDC	
Manufacturer		Nippon Chemi-Con Corporation	Semitec Corporation
		Order Number	
Brake Rated Current	1 A max.	TNR5V121K	Z5D121
	2 A max.	TNR7V121K	Z7D121
	4 A max.	TNR10V121K	Z10D121
	8 A max.	TNR14V121K	Z15D121

◆ Diodes for Holding Brake Power Supplies

Select a Diode for the holding brake power supply with a rated current that is greater than that of the holding brake and with the recommended withstand voltage given in the following table.

Diodes are not provided by Yaskawa.

Holding Brake Power Supply Unit Specifications		Withstand Voltage
Rated Output Voltage	Input Voltage	
24 VDC	200 V	100 V to 200 V

Regenerative Resistors

Types of Regenerative Resistors

The following regenerative resistors can be used.

- Built-in regenerative resistors: Some models of SERVOPACKs have regenerative resistors built into them.
- External regenerative resistors: These resistors are used when the smoothing capacitor and built-in regenerative resistor in the SERVOPACK cannot consume all of the regenerative power.
  Use Yaskawa's SigmaJunmaSize+, an AC Servo drive capacity selection program, to determine if a regenerative resistor is required.

Note: If you use an External Regenerative Resistor, you must change the setting of the Pn600 (Regenerative Resistor Capacity) or Pn603 (Regenerative Resistance) parameters.

Selection Table

SERVOPACK Model		Built-In Regenerative Resistor	External Regenerative Resistor	Contents
SGD7S-	SGD7W-			
R70A, R90A, 1R6A, 2R8A	–	None	Basically not required	There is no built-in regenerative resistor, but normally an external regenerative resistor is not required. Install an external regenerative resistor when the smoothing capacitor in the SERVOPACK cannot process all the regenerative power.*1
3R8A, 5R5A, 7R6A, 120A, 180A, 200A, 330A	1R6A, 2R8A, 5R5A, 7R6A	Standard feature*2	Basically not required	A built-in regenerative resistor is provided as a standard feature. Install an external regenerative resistor when the built-in regenerative resistor cannot process all the regenerative power.*1
1R9D, 3R5D, 5R4D, 8R4D, 120D, 170D	2R6D, 5R4D			
470A, 550A, 590A, 780A	–	None	Required.*3	A built-in regenerative resistor is not provided. An External Regenerative Resistor is required. If the External Regenerative Resistor is not connected to the SERVOPACK, a Regeneration Alarm (A.300) will occur.

*1. Use Yaskawa's SigmaJunmaSize+, an AC Servo drive capacity selection program, to select an external regenerative resistor.

*2. Refer to the following section for the specifications of built-in regenerative resistors.
☞ *Built-In Regenerative Resistor* (page 539)

*3. Regenerative Resistor Units are available. Refer to the following sections for details.
☞ *Regenerative Resistor Units* (page 540)

Built-In Regenerative Resistor

The following table gives the specifications of the built-in regenerative resistors in the SERVOPACKs and the amount of regenerative power (average values) that they can process.

SERVOPACK Model		Built-In Regenerative Resistor		Regenerative Power Processing Capacity of Built-In Regenerative Resistor [W]	Minimum Allowable Resistance [Ω]
SGD7S-	SGD7W-	Resistance [Ω]	Capacity [W]		
R70A, R90A, 1R6A, 2R8A	–	–	–	–	40
3R8A, 5R5A, 7R6A	1R6A, 2R8A	40	40	8	40
120A	–	20	60	10	20
180A, 200A	5R5A, 7R6A	12	60	16	12
330A	–	8	180	36	8
470A	–	(6.25)*1	(880)*1	(180)*1	5.8
550A, 590A, 780A	–	(3.13)*2	(1760)*2	(350)*2	2.9
1R9D, 3R5D		75	70	-	75
5R4D			140		
8R4D, 120D		43			43
170D		27	180		27
	2R6D	43	140		43
	5R4D				

*1. Values in parentheses are for the optional JUSP-RA04-E Regenerative Resistor Unit.
*2. Values in parentheses are for the optional JUSP-RA05-E Regenerative Resistor Unit.

External Regenerative Resistors (200 V Models)

Model	Specification	Inquiries	Manufacturer
RH120	70 W, 1 Ω to 100 Ω	Yaskawa Controls Co., Ltd.	Iwaki Musen Kenkyusho Co., Ltd.
RH150	90 W, 1 Ω to 100 Ω		
RH220 or RH220B	120 W, 1 Ω to 100 Ω		
RH300C	200 W, 1 kΩ to 10 kΩ		
RH500	300 W, 2 Ω to 50 Ω		

Note: 1. Consult Yaskawa Controls Co., Ltd. if you require a RoHS-compliant resistor.
2. Consult Yaskawa Controls Co., Ltd. for the model numbers and specifications of resistors with thermostats.

RH120 (Model) 10Ω (Resistance) J

Resistance Tolerance	
Code	Specification
K	±10%
J	±5%
H	±3%

External Regenerative Resistors (400 V Models)

SERVOPACK Specification			Resistor Specification			
SERVOPACK		Minimum Allowable External Resistance [Ω]	Model Resistor	Resistance [Ω]	Power [W]	Manufacturer
SGD7S-	1R9D	75	RH-0520W120-UL-T	120	520	Heine
	3R5D					
	5R4D					
	8R4D	43	RH-0400W045-UL-T	45	400	
	120D					
	170D	27	RH-0400W032-UL-T	32		
	210D	18	RH-4800W022-10-UL-T	22	1000	
	260D					
	280D	14.25				
	370D					
SGD7W-	2R6D	43	RH-0400W045-UL-T	45	400	
	5R4D					

Regenerative Resistor Units

SERVOPACK Model: SGD7S-	Regenerative Resistor Unit Model	Specifications	Allowable Power Loss
470A	JUSP-RA04-E	6.25 Ω, 880 W	180 W
550A, 590A, or 780A	JUSP-RA05-E	3.13 Ω, 1,760 W	350 W

Note: If you use only the above Regenerative Resistor Units, you do not need to change the setting of the Pn600 (Regenerative Resistor Capacity) or Pn603 (Regenerative Resistance) parameters.

◆ External Dimensions

■ JUSP-RA04-E

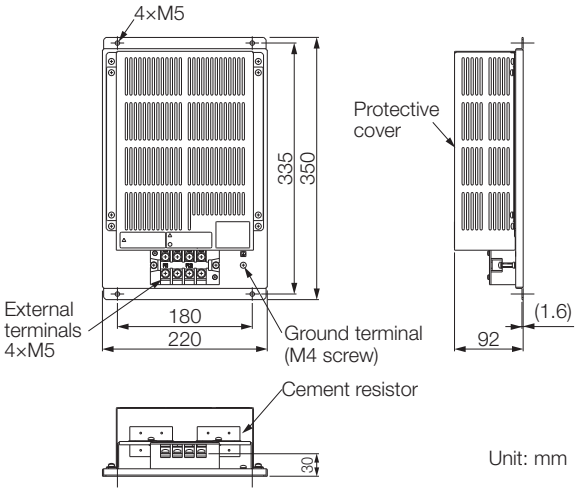

■ JUSP-RA05-E

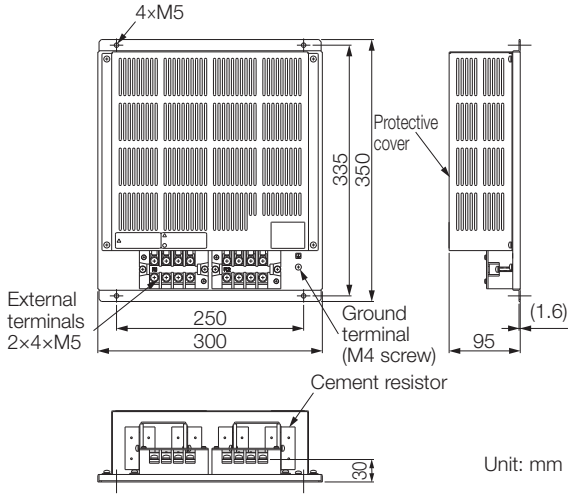

Dynamic Brake Resistors

Dynamic Brake Resistors for 400V SERVOPACKS

SERVOPACK Specification			Resistor Specification			
SERVOPACK		Minimum Allowable External Resistance [Ω]	Model Resistor	Resistance [Ω]	Power [W]	Manufacturer
SGD7S-	1R9D	20	-	-	-	-
	3R5D	7.5	-	-	-	-
	5R4D		-	-	-	-
	8R4D	7.8	-	-	-	-
	120D	4	-	-	-	-
	170D	3.3	-	-	-	-
	210D	No integrated Dynamic Brake circuit				
	260D					
	280D					
	370D					
SGD7W-	2R6D	7.5	-	-	-	-
	5R4D		-	-	-	-

Note: Contact you Yaskawa representative for information on Sigma-7 400V Dynamic Brake Resistors.

Calculate the energy that must be consumed by the resistance for one dynamic brake stop. To simplify the energy consumption calculation, assume that all the kinetic energy until the Servomotor stops is consumed by the dynamic brake resistor and use the following formula.

Out of all possible operation patterns, use the one which maximizes the kinetic energy of the Servomotor.

Rotary Servomotors

$$E_{DB} = \frac{1}{2} \times (J_M + J_L) \times \left(\frac{2\pi}{60} \times N\right)^2$$

Energy consumption of the dynamic brake resistor: EDB [J]

Motor moment of inertia*: JM [kgm2]

Load inertia: JL [kgm2]

Motor speed just before stopping with the dynamic brake: N [min-1]

* For detailed information on the motor moment of inertia, refer to the catalog or Servomotor product manual.

Linear Servomotors

$$E_{DB} = \frac{1}{2} \times (m_M + m_L) \times v^2$$

Energy consumption of the dynamic brake resistor: EDB [J]

Moving Coil mass*: mM [kg]

Load mass: mL [kg]

Motor speed just before stopping with the dynamic brake: v [m/s]

* For detailed information on Moving Coil mass, refer to the catalog or Servomotor product manual.

Batteries for Servo Motor with Absolute Encoders

If you use an absolute encoder, you can use an Encoder Cable with a Battery Case connected to it to supply power and retain the absolute position data.

You can also retain the absolute position data by supplying power from a battery on the host controller.

The Battery Case is sold as a replacement part for the Battery Case that is included with an Absolute Encoder Cable.

Name	Order Number	Remarks
Battery Case (case only)	JUSP-BA01-E	The Encoder Cable and Battery are not included. (This is a replacement part for a damaged Battery Case.)
Lithium Battery	JZSP-BA01	This is a special battery that mounts into the Battery Case.

Important

1. You cannot attach the Battery Case to an Incremental Encoder Cable.
2. Install the Battery Case where the surrounding air temperature is between -5°C and 60°C.

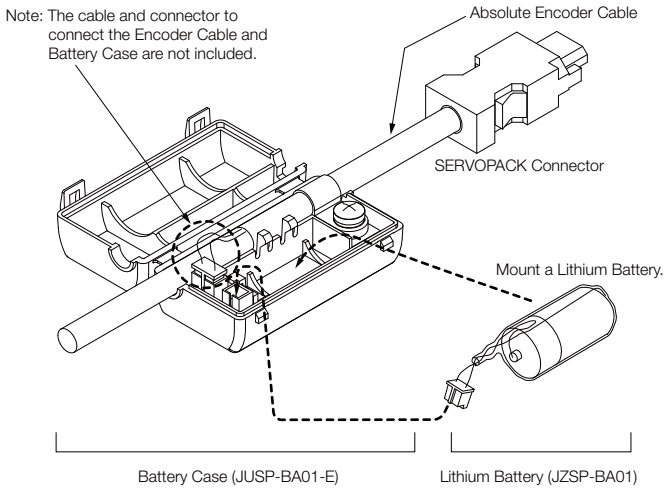

◆ Mounting a Battery in the Battery Case

Obtain a Lithium Battery (JZSP-BA01) and mount it in the Battery Case.

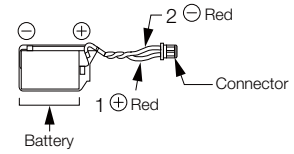

ER3V (3.6 V, 1000 mAh) from Toshiba Battery Co., Ltd.

◆ Connecting a Battery to the Host Controller

Use a battery that meets the specifications of the host controller. Use an ER6VC3N Battery (3.6 V, 2,000 mAh) from Toshiba Battery Co., Ltd. or an equivalent battery.

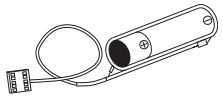

Current Suppression Devices

Inrush current suppression devices prevent equipment from being damaged by inrush current.

They are used only when using a SERVOPACK of 5 kW or higher (SGD7S-330A, -470A, -550A, -590A, or -780A) with a DC power supply input.

Selection Table

◆ External Inrush Current Suppression Resistors

Main Circuit Power Supply	SERVOPACK Model: SGD7S-	External Inrush Current Suppression Resistor			Manufacturer	Inquiries
		Order Number	Resistance [Ω]	Rated Power [W]		
270 VDC	330A	RH120-5ΩJ	5	70	Iwaki Musen Kenkyusho Co., Ltd.	Yaskawa Controls Co.,Ltd.
	470A					
	550A					
	590A	RH120-3ΩJ	3			
	780A					

◆ Inrush Current Suppression Resistor Short Relays

Main Circuit Power Supply	SERVOPACK Model: SGD7S-	Main Circuit DC Current [Arms]	Contact Specification	Recommended Inrush Current Suppression Resistor Short Relay			Manufacturer
				Model	Voltage Rating [Vdc]	Current Rating [A]	
270 VDC	330A	34	NO	G9EA-1-B	400	60	OMRON Corporation
	470A	36					
	550A	48		G9EA-1-B-CA		100	
	590A	68		G9EA-1-B-CA*1		200	
	780A	92		G9EC-1-B*2			

*1. Connect two Relays in parallel. Also, maintain the same resistance between the DC power supply and SERVOPACK for the wiring for each Relay.

*2. This Relay is applicable only when the temperature of the Relay installation environment is 50°C or less.

Software

SigmaWin+: AC Servo Drive Engineering Tool

The SigmaWin+ Engineering Tool is used to set up and optimally tune Yaskawa Σ-series Servo Drives.

◆ Features

- Set parameters with a wizard.
- Display SERVOPACK data on a computer just like you would on a oscilloscope.
- Estimate moments of inertia and measure vibration frequencies.
- Display alarms and alarm diagnostics.

Setting Parameters with a Wizard

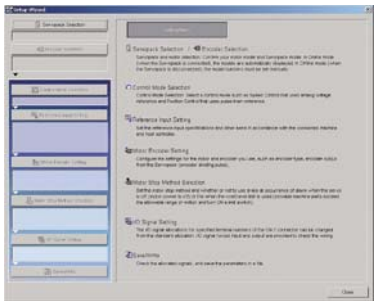

Displaying SERVOPACK Data on a Computer Just Like You Would on a Oscilloscope

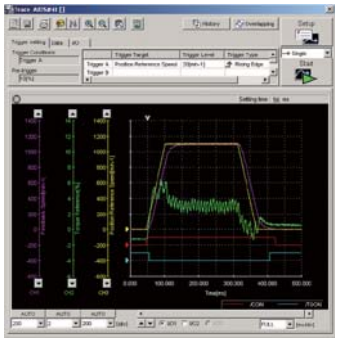

Estimating Moments of Inertia and Measuring Vibration Frequencies

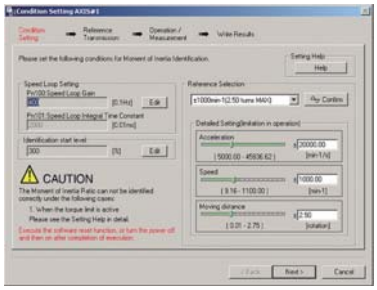

Displaying Alarms and Alarm Diagnostics



◆ System Requirements

Item	System Requirement
Supported Languages	English and Japanese
OS	Windows XP, Windows Vista, or Windows 7 (32-bit or 64-bit edition)
CPU	Pentium 200 MHz min.
Memory	64 MB min. (96 MB or greater recommended)
Available Hard Disk Space	For Standard Setup: 350 MB min. (400 MB or greater recommended for installation)

Appendices

Capacity Selection for Servo Motors 546

Capacity Selection for Regenerative Resistors 556

International Standards 572

Warranty 574

Capacity Selection for Servo Motors

Selecting the Servo Motor Capacity

Use Yaskawa's SigmaJunmaSize+, an AC servo drive capacity selection program, to select the Servo Motor capacity. With the SigmaJunmaSize+, you can find the optimum Servo Motor capacity by simply selecting and entering information according to instructions from a wizard.

Refer to the following selection examples to select Servo Motor capacities with manual calculations rather than with the above software.

Capacity Selection Example for a Rotary Servo Motor: For Speed Control

1. Mechanical Specifications

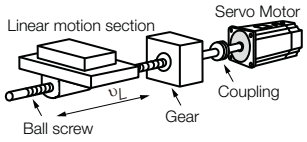

Item	Code	Value
Load Speed	v_L	15 m/min
Linear Motion Section Mass	m	250 kg
Ball Screw Length	ℓ_B	1.0 m
Ball Screw Diameter	d_B	0.02 m
Ball Screw Lead	P_B	0.01 m
Ball Screw Material Density	ρ	7.87×10^3 kg/m^3
Gear Ratio	R	2 (gear ratio: 1/2)
External Force on Linear Motion Section	F	0 N

Item	Code	Value
Gear and Coupling Moment of Inertia	J_G	0.40×10^{-4} kg·m^2
Number of Feeding Operations	n	40 operations/min
Feeding Distance	ℓ	0.275 m
Feeding Time	tm	1.2 s max.
Friction Coefficient	μ	0.2
Mechanical Efficiency	η	0.9 (90%)

2. Operation Pattern

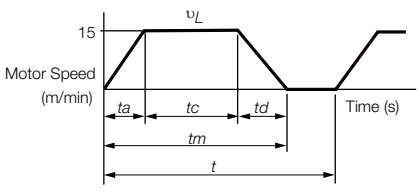

$$t = \frac{60}{n} = \frac{60}{40} = 1.5 \text{ (s)}$$

If ta = td,

$$ta = tm - \frac{60\ell}{v_L} = 1.2 - \frac{60 \times 0.275}{15} = 1.2 - 1.1 = 0.1 \text{ (s)}$$

$$tc = 1.2 - 0.1 \times 2 = 1.0 \text{ (s)}$$

3. Motor Speed

- Load shaft speed $n_L = \frac{v_L}{P_B} = \frac{15}{0.01} = 1{,}500$ (min^{-1})
- Motor shaft speed $n_M = n_L \cdot R = 1{,}500 \times 2 = 3{,}000$ (min^{-1})

4. Load Torque

$$T_L = \frac{(9.8 \cdot \mu \cdot m + F) \cdot P_B}{2\pi R \cdot \eta} = \frac{(9.8 \times 0.2 \times 250 + 0) \times 0.01}{2\pi \times 2 \times 0.9} = 0.43 \text{ (N·m)}$$

5. Load Moment of Inertia

- Linear motion section

$$J_{L1} = m\left(\frac{P_B}{2\pi R}\right)^2 = 250 \times \left(\frac{0.01}{2\pi \times 2}\right)^2 = 1.58 \times 10^{-4}\ (\text{kg·m}^2)$$

- Ball screw

$$J_B = \frac{\pi}{32}\rho \cdot \ell_B \cdot d_B^4 \cdot \frac{1}{R^2} = \frac{\pi}{32} \times 7.87 \times 10^3 \times 1.0 \times (0.02)^4 \cdot \frac{1}{2^2} = 0.31 \times 10^{-4}\ (\text{kg·m}^2)$$

- Coupling $J_G = 0.40 \times 10^{-4}$ (kg·m^2)
- Load moment of inertia at motor shaft

$$J_L = J_{L1} + J_B + J_G = (1.58 + 0.31 + 0.40) \times 10^{-4} = 2.29 \times 10^{-4}\ (\text{kg·m}^2)$$

6. Load Moving Power

$$P_O = \frac{2\pi n_M \cdot T_L}{60} = \frac{2\pi \times 3{,}000 \times 0.43}{60} = 135\ (\text{W})$$

7. Load Acceleration Power

$$Pa = \left(\frac{2\pi}{60} n_M\right)^2 \frac{J_L}{ta} = \left(\frac{2\pi}{60} \times 3{,}000\right)^2 \times \frac{2.29 \times 10^{-4}}{0.1} = 226\ (\text{W})$$

8. Servo Motor Provisional Selection

① Selection Conditions

- $T_L \leq$ Motor rated torque
- $\frac{(Po + Pa)}{2}$ < Provisionally selected Servo Motor rated output < ($Po + Pa$)
- $n_M \leq$ Rated motor speed
- $J_L \leq$ Allowable load moment of inertia

The following Servo Motor meets the selection conditions.

- SGM7J-02A Servo Motor

② Specifications of the Provisionally Selected Servo Motor

Item	Value
Rated Output	200 (W)
Rated Motor Speed	3,000 (min^{-1})
Rated Torque	0.637 (N·m)
Instantaneous Maximum Torque	2.23 (N·m)
Motor Moment of Inertia	0.263×10^{-4} (kg·m^2)
Allowable Load Moment of Inertia	$0.263 \times 10^{-4} \times 15 = 3.94 \times 10^{-4}$ (kg·m^2)

9. Verification of the Provisionally Selected Servo Motor

- Verification of required acceleration torque:

$$T_P = \frac{2\pi n_M (J_M + J_L)}{60ta} + T_L = \frac{2\pi \times 3{,}000 \times (0.263 + 2.29) \times 10^{-4}}{60 \times 0.1} + 0.43$$

$\approx$ 1.23 (N·m) < Maximum instantaneous torque...Satisfactory

- Verification of required deceleration torque:

$$T_S = \frac{2\pi n_M (J_M + J_L)}{60td} - T_L = \frac{2\pi \times 3{,}000 \times (0.263 + 2.29) \times 10^{-4}}{60 \times 0.1} - 0.43$$

$\approx$ 0.37 (N·m) < Maximum instantaneous torque...Satisfactory

- Verification of effective torque value:

$$Trms = \sqrt{\frac{T_P^2 \cdot ta + T_L^2 \cdot tc + Ts^2 \cdot td}{t}} = \sqrt{\frac{(1.23)^2 \times 0.1 + (0.43)^2 \times 1.0 + (0.37)^2 \times 0.1}{1.5}}$$

≈ 0.483 (N·m) < Rated torque...Satisfactory

10. Result

It has been verified that the provisionally selected Servo Motor is applicable.
The torque diagram is shown below.

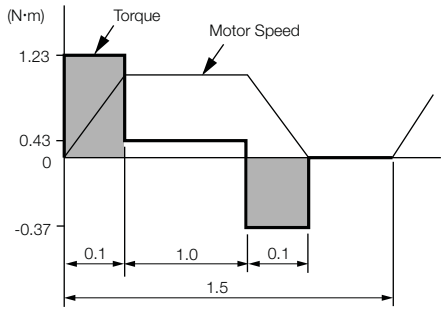

Capacity Selection Example for a Rotary Servo Motor: For Position Control

1. Mechanical Specifications

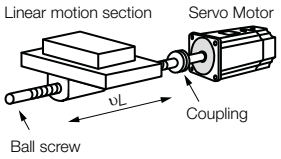

Item	Code	Value
Load Speed	υ_L	15 m/min
Linear Motion Section Mass	m	80 kg
Ball Screw Length	ℓ_B	0.8 m
Ball Screw Diameter	d_B	0.016 m
Ball Screw Lead	P_B	0.005 m
Ball Screw Material Density	ρ	7.87×10^3 kg/m^3
External Force on Linear Motion Section	F	0 N
Coupling Mass	m_C	0.3 kg

Item	Code	Value
Coupling Outer Diameter	d_C	0.03 m
Number of Feeding Operations	n	40 rotation/min
Feeding Distance	ℓ	0.25 m
Feeding Time	tm	1.2 s max.
Electrical Stopping Precision	δ	±0.01 mm
Friction Coefficient	μ	0.2
Mechanical Efficiency	η	0.9 (90%)

2. Speed Diagram

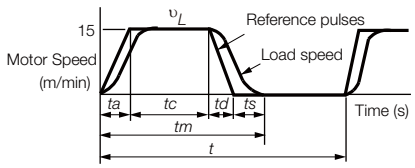

$$t = \frac{60}{n} = \frac{60}{40} = 1.5 \text{ (s)}$$

If ta = td and ts = 0.1 (s),

$$ta = tm - ts - \frac{60\,\ell}{\upsilon_L} = 1.2 - 0.1 - \frac{60 \times 0.25}{15} = 0.1 \text{ (s)}$$

$$tc = 1.2 - 0.1 - 0.1 \times 2 = 0.9 \text{ (s)}$$

3. Motor Speed

- Load shaft speed $n_L = \frac{\upsilon_L}{P_B} = \frac{15}{0.005} = 3{,}000\ (\text{min}^{-1})$
- Motor shaft speed
  Direct coupling gear ratio 1/R = 1/1
  Therefore, $n_M = n_L \cdot R = 3{,}000 \times 1 = 3{,}000\ (\text{min}^{-1})$

4. Load Torque

$$T_L = \frac{(9.8\,\mu \cdot m + F) \cdot P_B}{2\pi R \cdot \eta} = \frac{(9.8 \times 0.2 \times 80 + 0) \times 0.005}{2\pi \times 1 \times 0.9} = 0.139\ (\text{N·m})$$

5. Load Moment of Inertia

- Linear motion section

$$J_{L1} = m\left(\frac{P_B}{2\pi R}\right)^2 = 80 \times \left(\frac{0.005}{2\pi \times 1}\right)^2 = 0.507 \times 10^{-4}\ (\text{kg·m}^2)$$

- Ball screw $J_B = \frac{\pi}{32}\,\rho \cdot \ell_B \cdot d_B{}^4 = \frac{\pi}{32} \times 7.87 \times 10^3 \times 0.8 \times (0.016)^4 = 0.405 \times 10^{-4}\ (\text{kg·m}^2)$
- Coupling $Jc = \frac{1}{8}\,m_C \cdot d_C{}^2 = \frac{1}{8} \times 0.3 \times (0.03)^2 = 0.338 \times 10^{-4}\ (\text{kg·m}^2)$
- Load moment of inertia at motor shaft
  $J_L = J_{L1} + J_B + Jc = 1.25 \times 10^{-4}\ (\text{kg·m}^2)$

6. Load Moving Power

$$P_O = \frac{2\pi n_M \cdot T_L}{60} = \frac{2\pi \times 3{,}000 \times 0.139}{60} = 43.7\ (\text{W})$$

7. Load Acceleration Power

$$Pa = \left(\frac{2\pi}{60} n_M\right)^2 \frac{J_L}{ta} = \left(\frac{2\pi}{60} \times 3{,}000\right)^2 \times \frac{1.25 \times 10^{-4}}{0.1} = 123.4\ (\text{W})$$

8. Servo Motor Provisional Selection

① Selection Conditions

- $T_L \leq$ Motor rated torque
- $\frac{(Po + Pa)}{2}$ < Provisionally selected Servo Motor rated output < $(Po + Pa)$
- $n_M \leq$ Rated motor speed
- $J_L \leq$ Allowable load moment of inertia

The following Servo Motor meets the selection conditions.

- SGM7J-01A Servo Motor

② Specifications of the Provisionally Selected Servo Motor

Item	Value
Rated Output	100 (W)
Rated Motor Speed	3,000 (min^{-1})
Rated Torque	0.318 (N·m)
Instantaneous Maximum Torque	1.11 (N·m)
Motor Moment of Inertia	0.0659×10^{-4} (kg·m^2)
Allowable Load Moment of Inertia	$0.0659 \times 10^{-4} \times 35 = 2.31 \times 10^{-4}$ (kg·m^2)
Encoder Resolution	16,777,216 pulses/rev [24 bits]

9. Verification of the Provisionally Selected Servo Motor

- Verification of required acceleration torque:

$$T_P = \frac{2\pi n_M (J_M + J_L)}{60ta} + T_L = \frac{2\pi \times 3{,}000 \times (0.0659 + 1.25) \times 10^{-4}}{60 \times 0.1} + 0.139$$

≈ 0.552 (N·m) < Maximum instantaneous torque...Satisfactory

- Verification of required deceleration torque:

$$T_S = \frac{2\pi n_M (J_M + J_L)}{60td} - T_L = \frac{2\pi \times 3{,}000 \times (0.0659 + 1.25) \times 10^{-4}}{60 \times 0.1} - 0.139$$

≈ 0.274 (N·m) < Maximum instantaneous torque...Satisfactory

- Verification of effective torque value:

$$Trms = \sqrt{\frac{T_P^2 \cdot ta + T_L^2 \cdot tc + Ts^2 \cdot td}{t}} = \sqrt{\frac{(0.552)^2 \times 0.1 + (0.139)^2 \times 0.9 + (0.274)^2 \times 0.1}{1.5}}$$

≈ 0.192 (N·m) < Rated torque...Satisfactory

It has been verified that the provisionally selected Servo Motor is applicable in terms of capacity. Position control is considered next.

10. Positioning Resolution

The electrical stopping precision δ is ±0.01 mm, so the positioning resolution $\Delta\ell$ is 0.01 mm.
The ball screw lead P_B is 0.005 m, so the number of pulses per motor rotation is calculated with the following formula.

$$\text{The number of pulses per revolution (pulses)} = \frac{P_B}{\Delta\ell} = \frac{5 \text{ mm/rev}}{0.01 \text{ mm}} = 500 \text{ (pulses/rev)} < \text{Encoder resolution [16777216 (pulses/rev)]}$$

The number of pulses per motor rotation is less than the encoder resolution (pulses/rev), so the provisionally selected Servo Motor can be used.

11. Reference Pulse Frequency

The load speed υ_L is 15 m/min, or 1,000 × 15/60 mm/s and the positioning resolution (travel distance per pulse) is 0.01 mm/pulse, so the reference pulse frequency is calculated with the following formula.

$$vs = \frac{1{,}000\upsilon_L}{60 \times \Delta\ell} = \frac{1{,}000 \times 15}{60 \times 0.01} = 25{,}000 \text{ (pps)}$$

The reference pulse frequency is less than the maximum input pulse frequency,* so the provisionally selected Servo Motor can be used.

*Refer to the specifications in the SERVOPACK manual for the maximum input pulse frequency.

It has been verified that the provisionally selected Servo Motor is applicable for position control.

Capacity Selection Example for Direct Drive Servo Motors

1. Mechanical Specifications

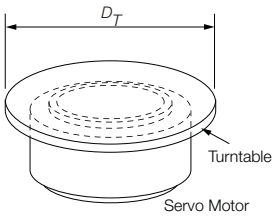

Item	Code	Value
Turntable Mass	w	12 kg
Turntable Diameter	D_T	300 mm
Rotational Angle per Cycle	θ	270 deg
Positioning Time	t_0	0.35 s

Item	Code	Value
Acceleration/ Deceleration Time	t_p = t_{psa} = t_{psd}	0.1 s
Operating Frequency	t_f	2 s
Load Torque	T_L	0 N·m
Settling Time	t_s	0.1 s

2. Motor Speed of Direct Drive Servo Motor

$$N_O = \frac{\theta}{360} \times \frac{60}{(t_0 - t_p - t_s)} = \frac{270}{360} \times \frac{60}{(0.35 - 0.1 - 0.1)} = 300\ (\text{min}^{-1})$$

3. Operation Pattern

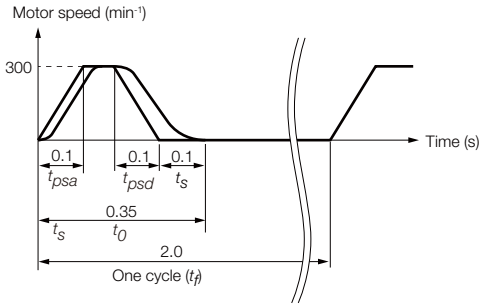

4. Load Moment of Inertia

$$J_L = \frac{1}{8} \times D_T^2 \times W = \frac{1}{8} \times (300 \times 10^{-3})^2 \times 12 = 0.135\ (\text{kg·m}^2)$$

5. Load Acceleration/Deceleration Torque

$$T_a = J_L \times 2\pi \times \frac{N_O/60}{t_p} = 0.135 \times 2\pi \times \frac{300/60}{0.1} = 42.4\ (\text{N·m})$$

6. Provisional Selection of Direct Drive Servo Motor

① Selection Conditions

- Load acceleration/deceleration torque < Instantaneous maximum torque of Direct Drive Servo Motor
- Load moment of inertia < Allowable load moment of inertia ratio (J_R) × Moment of inertia of Direct Drive Servo Motor (J_M)

The following Servo Motor meets the selection conditions.

- SGMCV-17CEA11

② Specifications of the Provisionally Selected Servo Motor

Item	Value
Rated Torque	17 (N·m)
Instantaneous Maximum Torque	51 (N·m)

Item	Value
Moment of Inertia (J_M)	0.00785 (kg·m^2)
Allowable Load Moment of Inertia Ratio (J_R)	25

7. Verification of the Provisionally Selected Servo Motor

- Verification of required acceleration torque:

$$T_{Ma} = \frac{(J_L + J_M) \times N_O}{9.55 \times t_{psa}} = \frac{(0.135 + 0.00785) \times 300}{9.55 \times 0.1}$$

$\approx$ 44.9 (N·m) < Maximum instantaneous torque...Satisfactory

- Verification of required deceleration torque:

$$T_{Md} = -\frac{(J_L + J_M) \times N_O}{9.55 \times t_{psd}} = -\frac{(0.135 + 0.00785) \times 300}{9.55 \times 0.1}$$

$\approx$ -44.9 (N·m) < Maximum instantaneous torque...Satisfactory

- Verification of effective torque value:

$$Trms = \sqrt{\frac{T_{Ma}^2 \times t_{psa} + T_L^2 \times t_c + T_{Md}^2 \times t_{psd}}{tf}} = \sqrt{\frac{44.9^2 \times 0.1 + 0^2 \times 0.05 + (-44.9)^2 \times 0.1}{2}}$$

$\approx$ 14.2 (N·m) < Rated torque...Satisfactory

t_c =Time of constant motor speed = $t_0 - t_s - t_{psa} - t_{psd}$

8. Result

It has been verified that the provisionally selected Servo Motor is applicable.
The torque diagram is shown below.

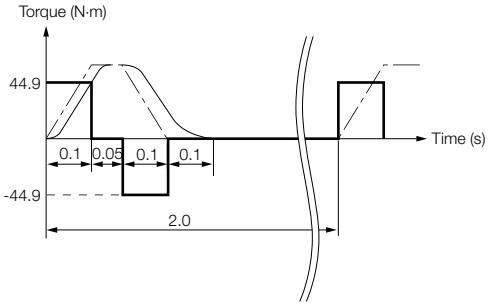

Servo Motor Capacity Selection Example for Linear Servo Motors

1. Mechanical Specifications

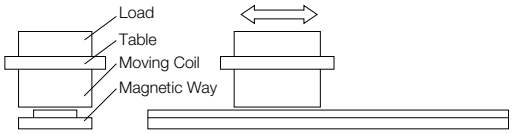

Item	Code	Value
Load Mass	m_W	1 kg
Table Mass	m_T	2 kg
Motor Speed	v	2 m/s
Feeding Distance	l	0.76 m
Friction Coefficient	μ	0.2

Item	Code	Value
Acceleration Time	t_a	0.02 s
Constant-speed Time	t_c	0.36 s
Deceleration Time	t_d	0.02 s
Cycle Time	t	0.5 s
External Force on Linear Motion Section	F	0 N

2. Operation Pattern

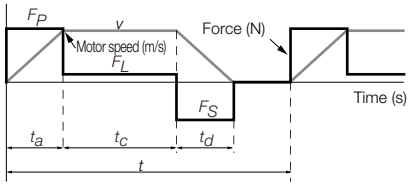

3. Steady-State Force (Excluding Servo Motor Moving Coil)
$F_L = \{9.8 \times \mu \times (m_W + m_T)\} + F = 9.8 \times 0.2 \times (1 + 2) + 0 = 5.88$ (N)

4. Acceleration Force (Excluding Servo Motor Moving Coil)

$$F_P = (m_W + m_T) \times \frac{v}{t_a} + F_L = (1 + 2) \times \frac{2}{0.02} + 5.88 = 305.88 \text{ (N)}$$

5. Provisional Selection of Linear Servo Motor

① Selection Conditions

- $F_P \leq$ Maximum force $\times$ 0.9
- $F_s \leq$ Maximum force $\times$ 0.9
- $F_{rms} \leq$ Rated force $\times$ 0.9

The following Servo Motor Moving Coil and Magnetic Way meet the selection conditions.

- SGLGW-60A253CP Linear Servo Motor Moving Coil
- SGLGM-60□□□C Linear Servo Motor Magnetic Way

② Specifications of the Provisionally Selected Servo Motor

Item	Value
Maximum Force	440 (N)
Rated Force	140 (N)
Moving Coil Mass (m_M)	0.82 (kg)
Servo Motor Magnetic Attraction (F_{att})	0 (N)

6. Verification of the Provisionally Selected Servo Motor

- Steady-State Force

  $F_L = \mu \{9.8 \times (m_W + m_T + m_M) + F_{att}\} = 0.2 \{9.8 \times (1 + 2 + 0.82) + 0\} = 7.5$ (N)

- Verification of Acceleration Force

$$F_P = (m_W + m_T + m_M) \times \frac{v}{t_a} + F_L = (1 + 2 + 0.82) \times \frac{2}{0.02} + 7.5$$

$$= 389.5 \text{ (N)} \leq \text{Maximum force} \times 0.9 (= 396 \text{ N}) \ldots \text{Satisfactory}$$

- Verification of Deceleration Force

$$F_S = (m_W + m_T + m_M) \times \frac{v}{t_a} - F_L = (1 + 2 + 0.82) \times \frac{2}{0.02} - 7.5$$

$$= 374.5 \text{ (N)} \leq \text{Maximum force} \times 0.9 (= 396 \text{ N}) \ldots \text{Satisfactory}$$

- Verification of Effective Force

$$F_{rms} = \sqrt{\frac{F_P^2 \cdot t_a + F_L^2 \cdot t_c + F_s^2 \cdot t_d}{t}} = \sqrt{\frac{389.5^2 \times 0.02 + 7.5^2 \times 0.36 + 374.5^2 \times 0.02}{0.5}}$$

$$= 108.3 \text{ (N)} \leq \text{Rated force} \times 0.9 (= 132.3 \text{ N}) \ldots \text{Satisfactory}$$

7. Result

It has been verified that the provisionally selected Servo Motor is applicable.

Capacity Selection for Regenerative Resistors

If the regenerative power exceeds the amount that can be absorbed by charging the smoothing capacitor, a regenerative resistor is used.

Regenerative Power and Regenerative Resistance

The rotational energy of a driven machine such as a Servo Motor that is returned to the SERVOPACK is called regenerative power. The regenerative power is absorbed by charging a smoothing capacitor. When the regenerative power exceeds the capacity of the capacitor, it is consumed by a regenerative resistor. (This is called resistance regeneration.)

The Servo Motor is driven in a regeneration state in the following circumstances:

- While decelerating to a stop during acceleration/deceleration operation.
- While performing continuous downward operation on a vertical axis.
- During continuous operation in which the Servo Motor is rotated by the load (i.e., a negative load).

Important

You cannot use the resistance regeneration provided by the SERVOPACK for continuous regeneration. For continuous operation with a negative load, you must design a system that also includes a Power Regenerative Converter or Power Regenerative Unit (for example, Yaskawa model D1000 or R1000). If regenerative power is not appropriately processed, the regenerative energy from the load will exceed the allowable range and damage the SERVOPACK.
Examples of negative loads are shown below.

- Motor Drive to Lower Objects without a Counterweight

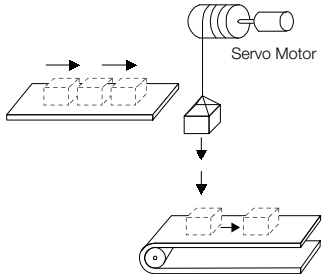

- Motor Drive for Feeding

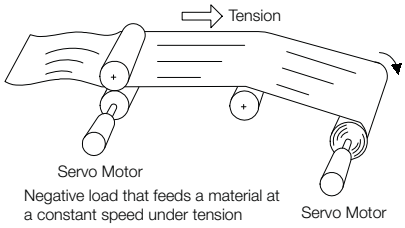

Types of Regenerative Resistors

The following regenerative resistors can be used.

- Built-in regenerative resistor: A regenerative resistor that is built into the SERVOPACK. Not all SERVOPACKs have built-in regenerative resistors.
- External Regenerative Resistor: A regenerative resistor that is connected externally to a SERVOPACK. These resistors are used when the smoothing capacitor and built-in regenerative resistor in the SERVOPACK cannot consume all of the regenerative power.

SERVOPACK Model		Built-In Regenerative Resistor	External Regenerative Resistor
SGD7S-	R70A, R90A, 1R6A, 2R8A	None	Basically not required
	3R8A, 5R5A, 7R6A, 120A, 180A, 200A, 330A	Standard feature *1	Basically not required
	470A, 550A, 590A, 780A	None	Required *2
SGD7W-	1R6A, 2R8A, 5R5A, 7R6A	Standard feature *1	Basically not required

*1. Refer to the following section for the specifications of the regenerative resistors built into SERVOPACKs.
☞ *Built-In Regenerative Resistor* (page 539)

*2. An optional external Regenerative Resistor Unit is required.

Selecting External Regenerative Resistor

Use Yaskawa's SigmaJunmaSize+, an AC servo drive capacity selection program, to determine if you need an External Regenerative Resistor.

You can use one of the following two methods to manually calculate whether an External Regenerative Resistor is required. Refer to the following information if you do not use the SigmaJunmaSize+.

☞ *Simple Calculation* (page 557)

☞ *Calculating the Regenerative Energy* (page 562)

Simple Calculation

When driving a Servo Motor with a horizontal shaft, check if an External Regenerative Resistor is required using the following calculation method. The calculation method depends on the model of the SERVOPACK.

◆ SERVOPACK Models SGD7S-R70A, -R90A, -1R6A, and -2R8A

Regenerative resistors are not built into the above SERVOPACKs. The total amount of energy that can be charged in the capacitors is given in the following table.

If the rotational energy (E_S) of the Servo Motor and load exceeds the processable regenerative energy, then connect an External Regenerative Resistor.

Applicable SERVOPACK		Processable Regenerative Energy (Joules)	Remarks
SGD7S-	R70A, R90A, 1R6A	24.2	Value when main circuit input voltage is 200 VAC
	2R8A	31.7	

Calculate the rotational energy (E_S) of the servo system with the following equation:

$E_S = J \times (n_M)^2/182$ (Joules)

- $J = J_M + J_L$
- J_M: Servo Motor moment of inertia ($kg \cdot m^2$)
- J_L: Load moment of inertia at motor shaft $kg \cdot m^2$)
- n_M: Servo Motor operating motor speed (min^{-1})

◆ SERVOPACK Models SGD7S-3R8A, -5R5A, -7R6A, -120A, -180A, -200A, -330A, -470A, -550A, -590A, and -780A; SGD7W-1R6A, -2R8A, -5R5A, and -7R6A

These SERVOPACKs have built-in regenerative resistors. The allowable frequencies for regenerative operation of the Servo Motor without a load in acceleration/deceleration operation during an operation cycle from 0 (min^{-1}) to the maximum motor speed and back to 0, are listed in the following table. Convert the data into the values for the actual motor speed and load moment of inertia to determine whether an External Regenerative Resistor is required.

■ Rotary Servo Motors

Servo Motor Model		Allowable Frequencies in Regenerative Operation (Operations/Min)	
		SERVOPACK Model: SGD7S	SERVOPACK Model: SGD7W (Simultaneous Operation of Two Axes)
SGM7J-	A5A	–	300
	01A	–	180
	C2A	–	130
	02A	–	46
	04A	–	25
	06A	30	30
	08A	15	15
SGM7A-	A5A	–	560
	01A	–	360
	C2A	–	260
	02A	–	87
	04A	–	56
	06A	77	77
	08A	31	31
	10A	31	–
	15A	15	–
	20A	19	–
	25A	15	–
	30A	6.9	–
	40A	11	–
	50A	8.8	–
	70A	86	–

Servo Motor Model		Allowable Frequencies in Regenerative Operation (Operations/Min)	
		SERVOPACK Model: SGD7S	SERVOPACK Model: SGD7W (Simultaneous Operation of Two Axes)
SGM7P-	01A	–	200
	C2A	–	46
	04A	–	29
	08A	11	11
	15A	7.5	–
SGM7G-	03A	39	39
	05A	29	29
	09A	6.9	6.9
	13A	6.1	–
	20A	7.4	–
	30A	9.5	–
	44A	6.4	–
	55A	24	–
	75A	34	–
	1AA	39	–
	1EA	31	–

■ Direct Drive Servo Motors

Servo Motor Model		Allowable Frequencies in Regenerative Operation (Operations/Min)	
		SERVOPACK Model: SGD7S	SERVOPACK Model: SGD7W (Simultaneous Operation of Two Axes)
SGMCS-	02B	–	62
	05B	–	34
	07B	–	22
	04C	–	22
	08D	–	6.1
	10C	–	19
	14C	–	22
	17D	–	7
	25D	–	9.3
	16E	3.7	3.7
	35E	9.7	9.7
	45M	25	25
	80M	19	–
	80N	8.9	–
	1AM	22	–
	1EN	11	–
	2ZN	9.1	–

■ Linear Servo Motors

Servo Motor Model		Allowable Frequencies in Regenerative Operation (Operations/Min)	
		SERVOPACK Model: SGD7S	SERVOPACK Model: SGD7W (Simultaneous Operation of Two Axes)
SGLGW- Using a Standard-Force Magnetic Way	30A050C	–	190
	30A080C	–	120
	40A140C	–	56
	40A253C	–	32
	40A365C	–	22
	60A140C	–	49
	60A253C	–	27
	60A365C	37	37
	90A200C	34	–
	90A370C	33	–
	90A535C	24	–
SGLGW- Using a High-Force Magnetic Way	40A140C	–	80
	40A253C	–	45
	40A365C	62	62
	60A140C	–	64
	60A253C	71	71
	60A365C	49	49
SGLFW-	20A090A	–	27
	20A120A	–	21
	35A120A	–	14
	35A230A	16	16
	50A200B	10	10
	50A380B	6.9	–
	1ZA200B	7.8	–
	1ZA380B	6.6	–
SGLTW-	20A170A	15	15
	20A320A	8.3	8.3
	20A460A	7.1	–
	35A170A	10	10
	35A170H	8.5	8.5
	35A320A	7	–
	35A320H	5.9	–
	35A460A	7.6	–
	40A400B	13	–
	40A600B	19	–
	50A170H	15	15
	50A320H	11	–
	80A400B	28	–
	80A600B	180	–

*1. This value is in combination with the SGD7S-120A.

*2. This value is in combination with the SGD7S-180A

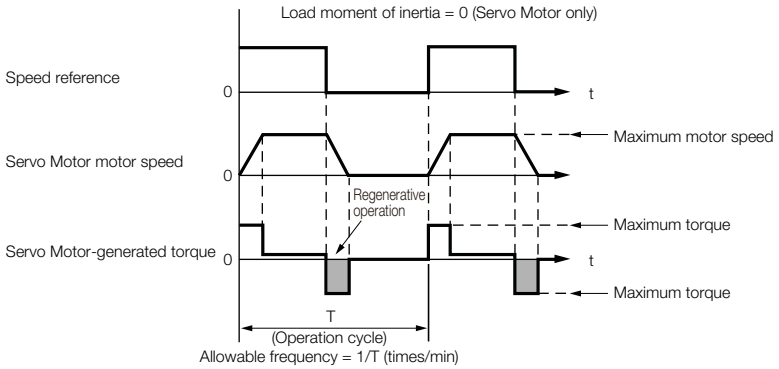

Operating Conditions for Calculating the Allowable Regenerative Frequency

Use the following equation to calculate the allowable frequency for regenerative operation.

$$\text{Allowable frequency} \frac{\text{Allowable frequency for regenerative operation for Servo Motor without load}}{(1+n)} \times \left(\frac{\text{Maximum motor speed}}{\text{Operating motor speed}}\right)^2 \text{(time/min)}$$

- $n = J_L/J_M$
- J_M: Servo Motor moment of inertia (kg·m^2)
- J_L: Load moment of inertia at motor shaft (kg·m^2)

Calculating the Regenerative Energy

This section shows how to calculate the regenerative resistor capacity for the acceleration/deceleration operation shown in the following figure.

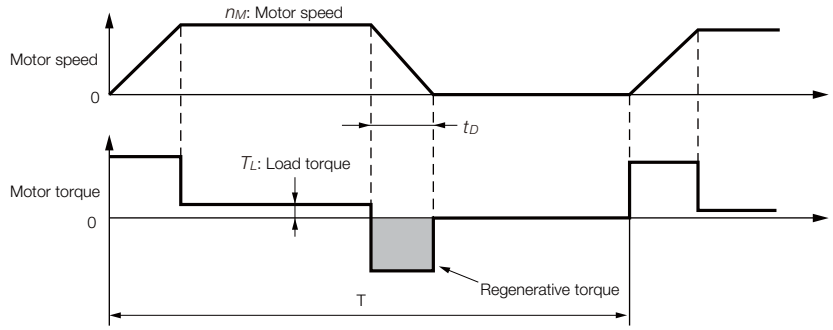

- Calculation Procedure for Regenerative Resistor Capacity

Step	Item	Code	Formula
1	Calculate the rotational energy of the Servo Motor.	E_S	$E_S = Jn_M^2/182$
2	Calculate the energy consumed by load loss during the deceleration period	E_L	$E_L = (\pi/60)\, n_M T_L t_D$ Note: If the load loss is unknown, calculate the value with E_L set to 0.
3	Calculate the energy lost from Servo Motor winding resistance.	E_M	(Value calculated from the graphs in ◆ *Servo Motor Winding Resistance Loss* on page 565) $\times t_D$
4	Calculate the energy that can be absorbed by the SERVOPACK.	E_C	Calculate from the graphs in ◆ *SERVOPACK-absorbable Energy* on page 563
5	Calculate the energy consumed by the regenerative resistor.	E_K	$E_K = E_S - (E_L + E_M + E_C)$ $E_K = E_S - (E_L + E_M + E_C) + E_G$* Note: Use this formula if there will be continuous periods of regenerative operation, such as for a vertical axis.
6	Calculate the required regenerative resistor capacity (W).	W_K	$W_K = E_K/(0.2 \times T)$

* E_G (joules): Energy for continuous period of regenerative operation
$E_G = (2\pi/60)\, n_{MG} T_G t_G$
- T_G: Servo Motor's generated torque in continuous period of regenerative operation (N·m)
- n_{MG}: Servo Motor's motor speed for same operation period as above (min^{-1})
- t_G: Same operation period as above (s)

Note: 1. The 0.2 in the equation for calculating W_K is the value when the regenerative resistor's utilized load ratio is 20%.
2. The units for the various symbols are given in the following table.

Code	Description
E_S to E_K	Energy in joules (J)
W_K	Required regenerative resistor capacity (W)
J	$= J_M + J_L$ ($kg \cdot m^2$)
n_M	Servo Motor motor speed (min^{-1})

Code	Description
T_L	Load torque (N·m)
t_D	Deceleration stopping time (s)
T	Servo Motor repeat operation cycle (s)

If the value of W_K does not exceed the capacity of the built-in regenerative resistor of the SERVOPACK, an External Regenerative Resistor is not required. For details on the built-in regenerative resisters, refer to the SERVOPACK specifications. If the value of W_K exceeds the capacity of the built-in regenerative resistor, install an External Regenerative Resistor with a capacity equal to the value for W calculated above.

◆ SERVOPACK-absorbable Energy

The following figures show the relationship between the SERVOPACK's input power supply voltage and its absorbable energy.

■ Σ-7S SERVOPACKs

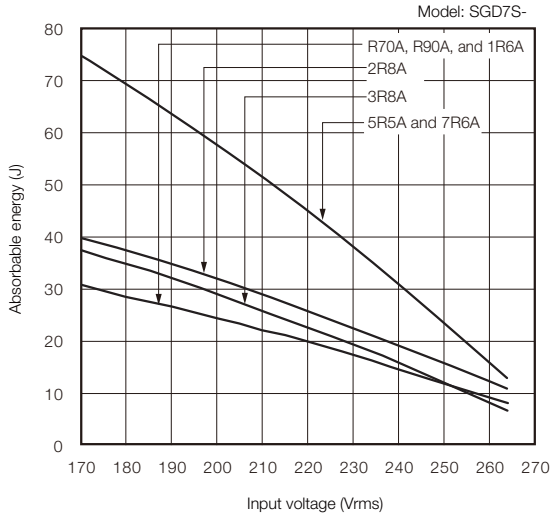

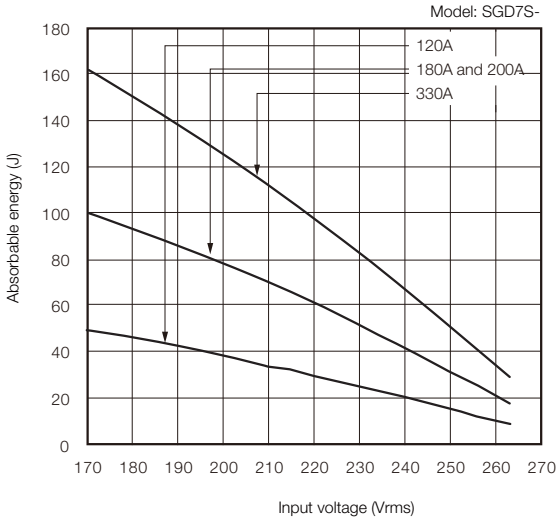

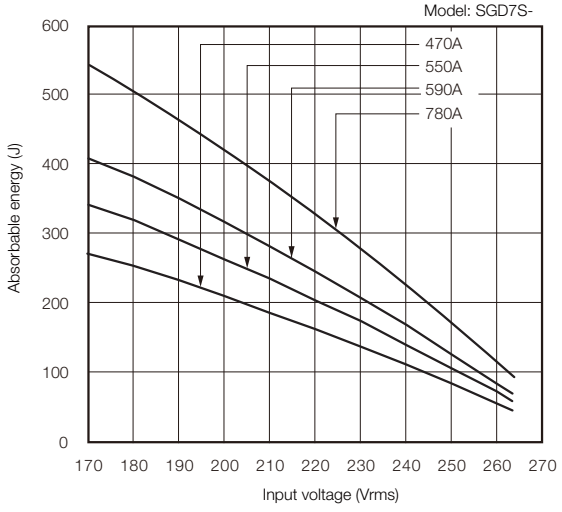

■ Σ-7W SERVOPACKs

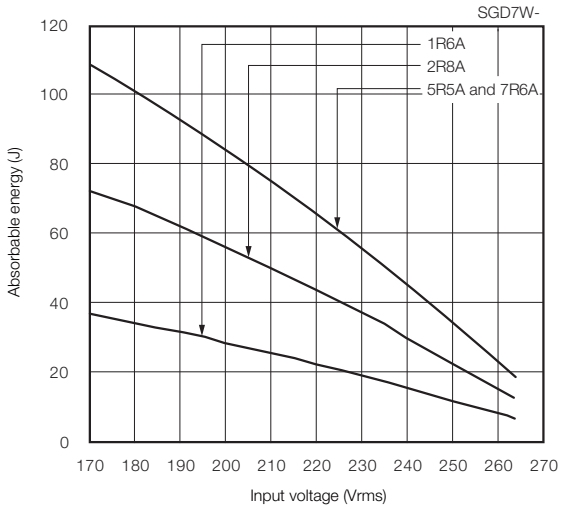

◆ Servo Motor Winding Resistance Loss

The following figures show the relationship for each Servo Motor between the Servo Motor's generated torque and the winding resistance loss.

■ SGM7J Rotary Servo Motors

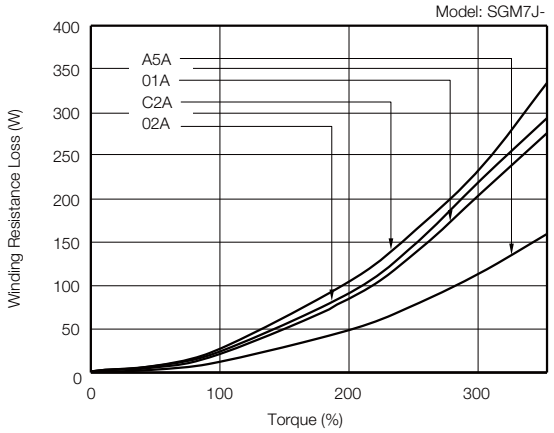

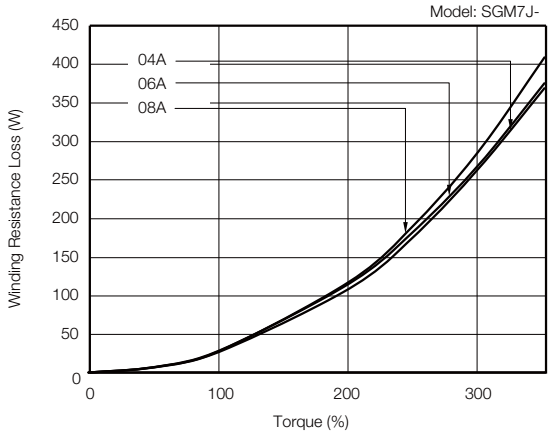

■ SGM7A Rotary Servo Motors

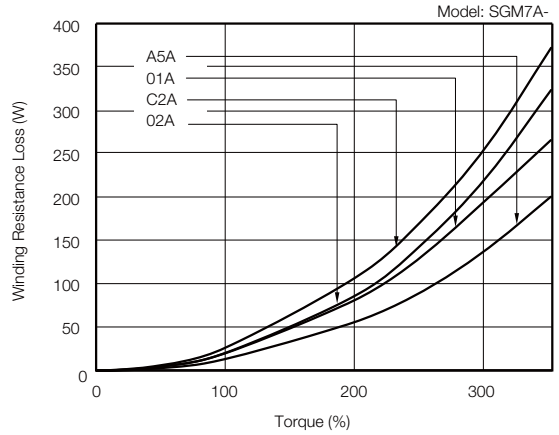

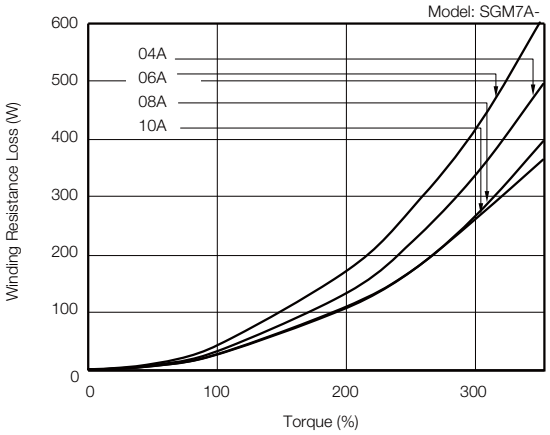

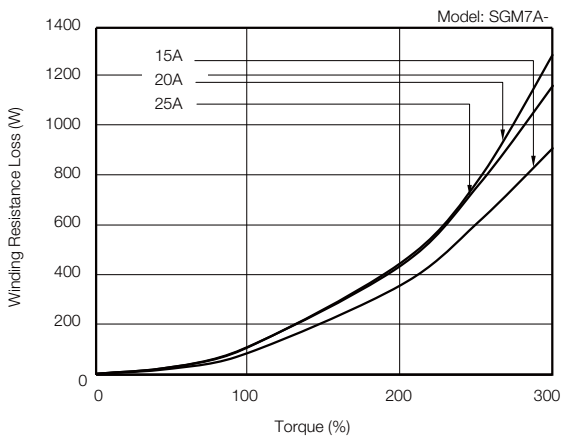

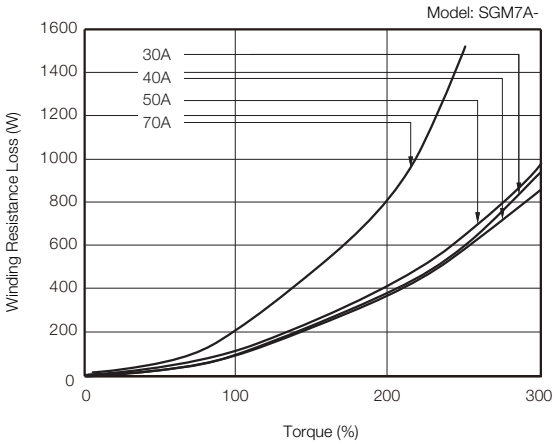

■ SGM7P Rotary Servo Motors

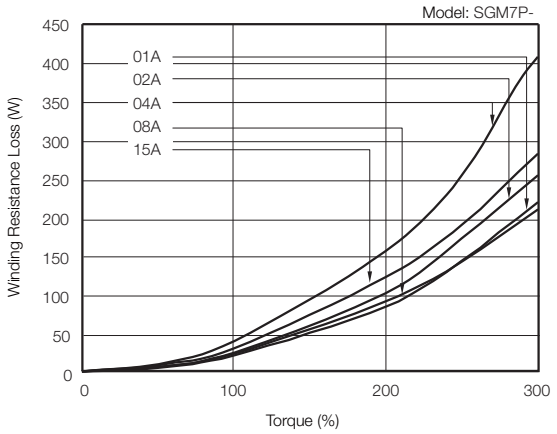

■ SGM7G Rotary Servo Motors

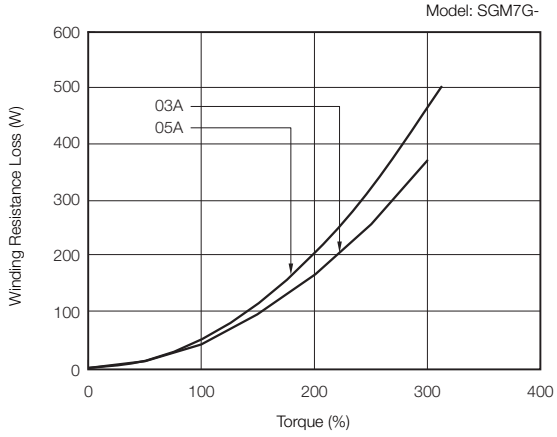

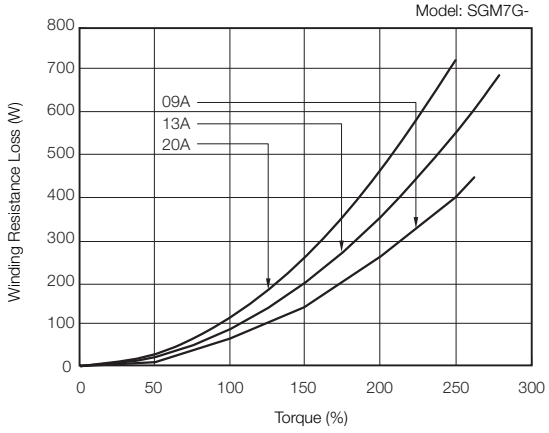

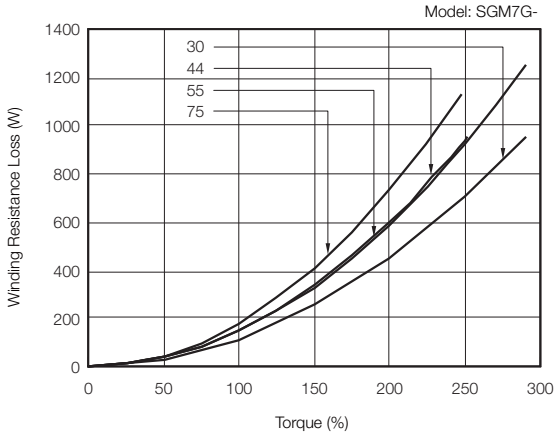

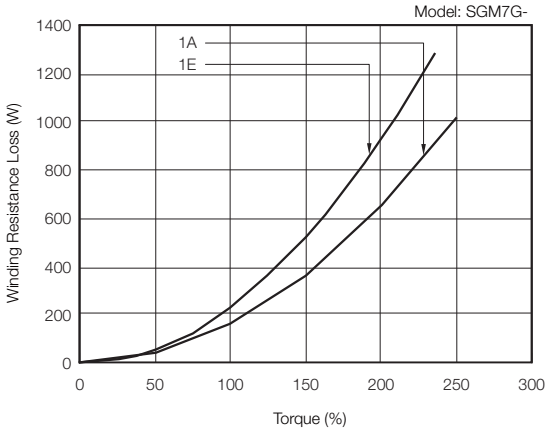

■ SGMCS Direct Drive Servo Motors

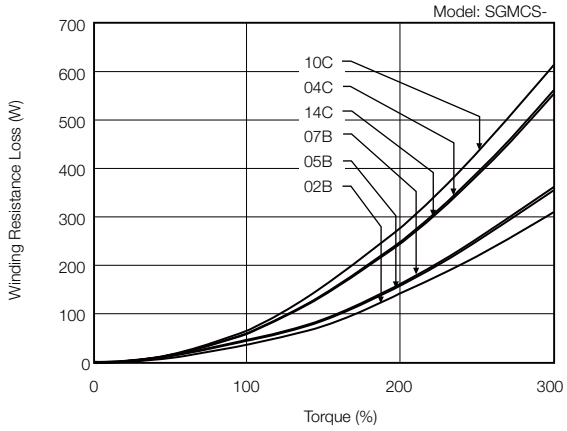

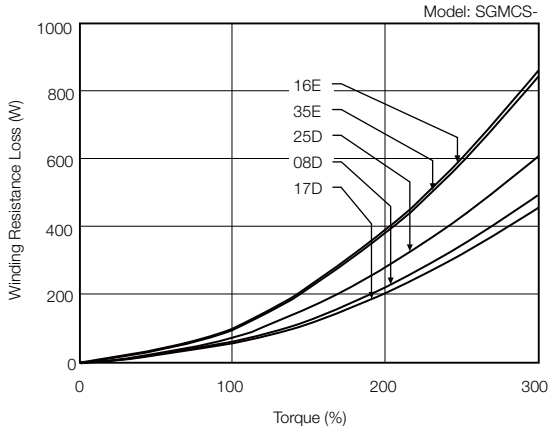

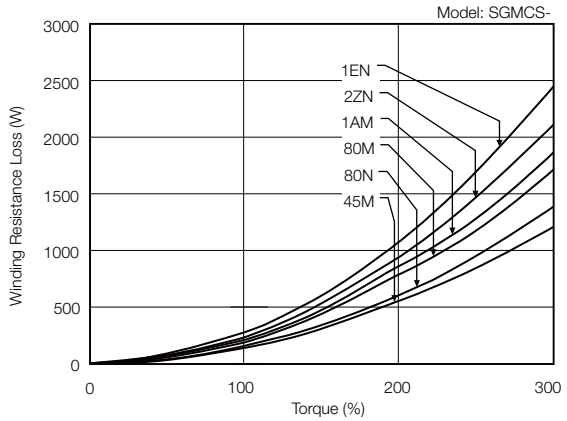

■ SGLGW Linear Servo Motors

Model: SGLGW-30A

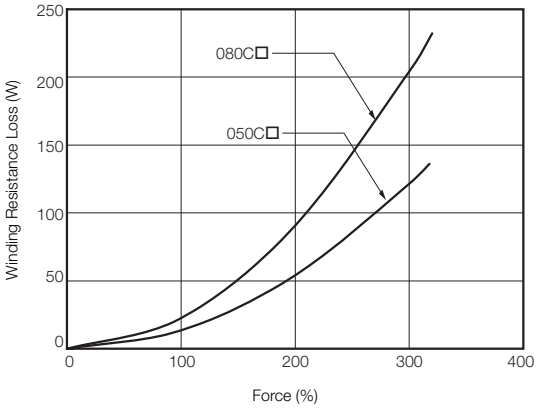

Model: SGLGW-40A

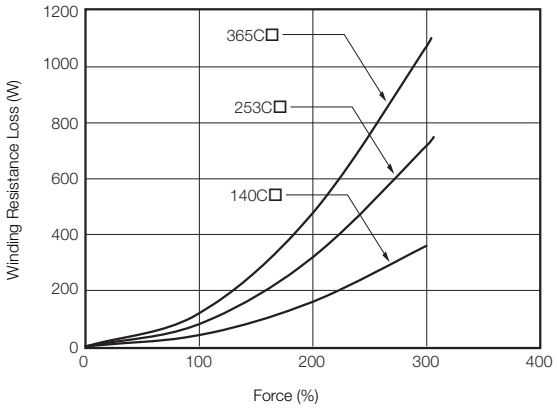

Model: SGLGW-40A

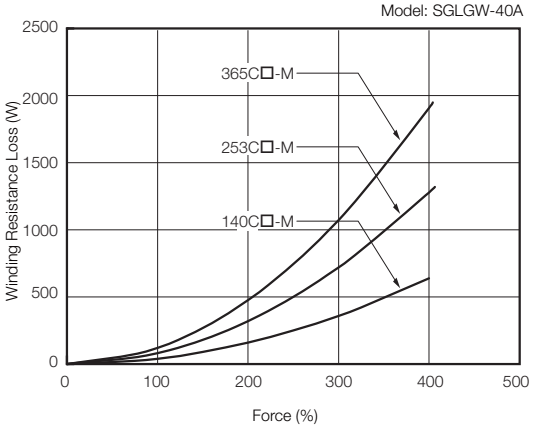

Model: SGLGW-60A

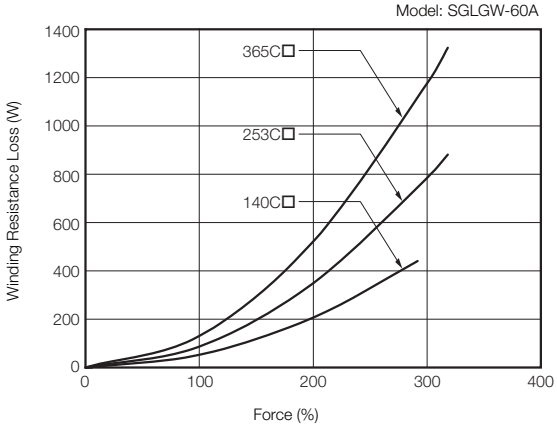

Model: SGLGW-60A

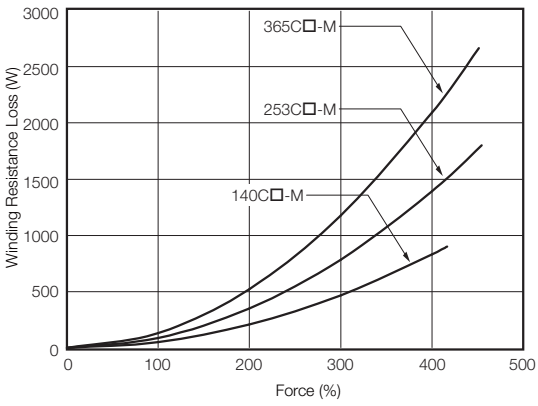

Model: SGLGW-90A

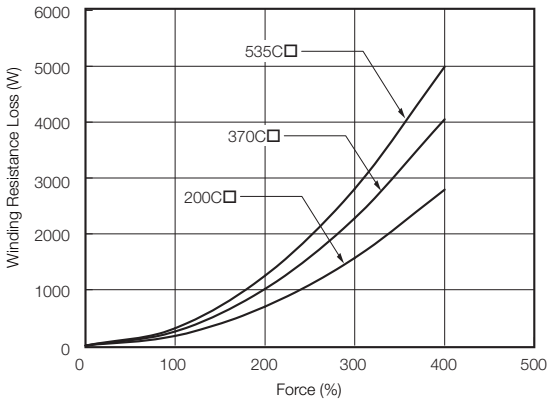

■ SGLFW Linear Servo Motors

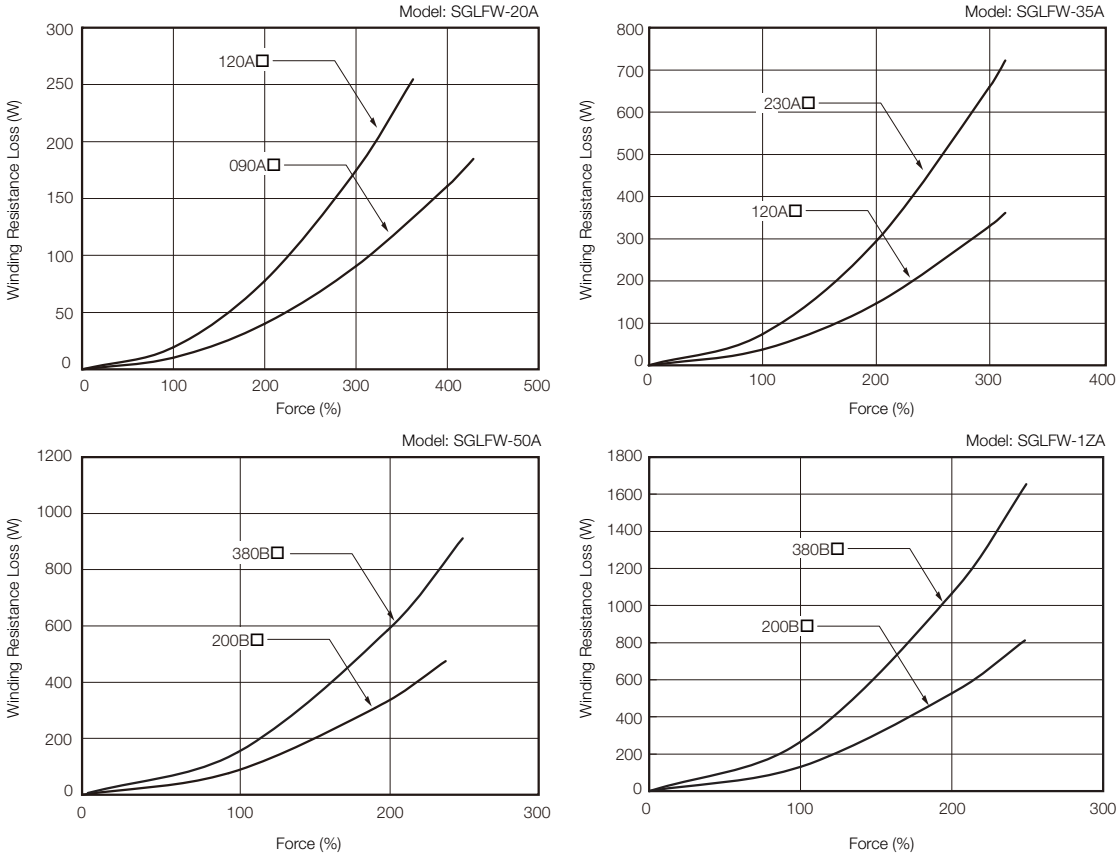

■ SGLTW Linear Servo Motors

Model: SGLTW-20A

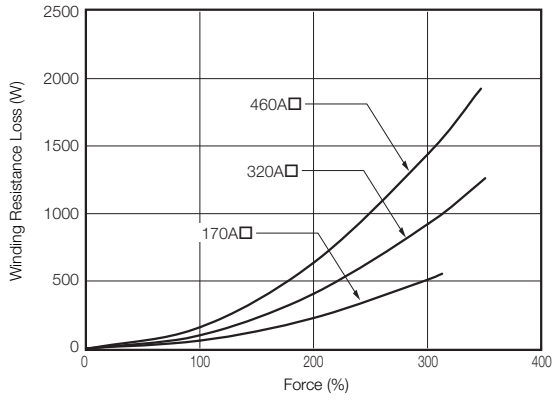

Model: SGLTW-35A

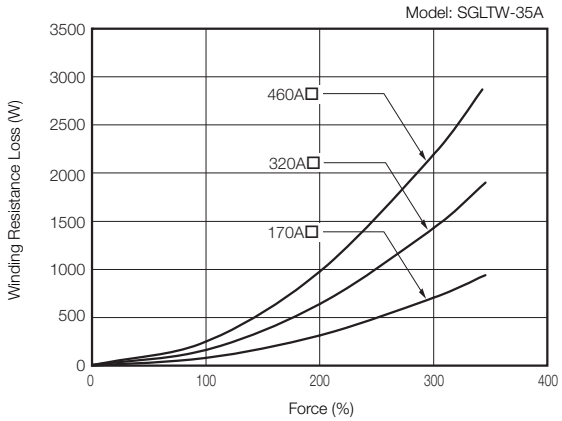

Model: SGLTW-35A

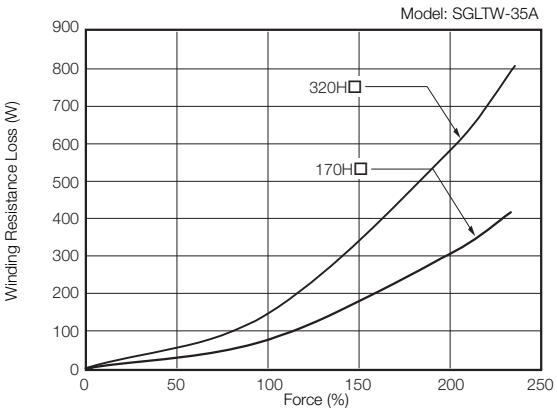

Model: SGLTW-40A

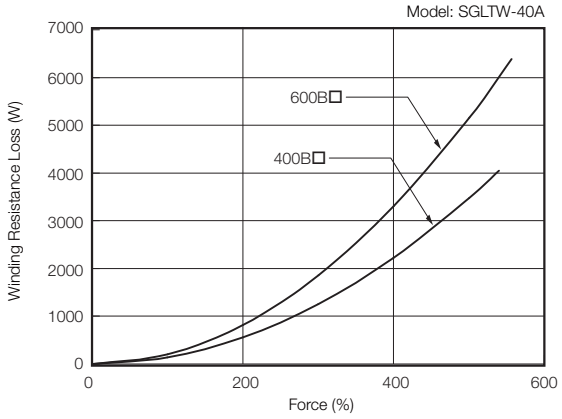

Model: SGLTW-50A

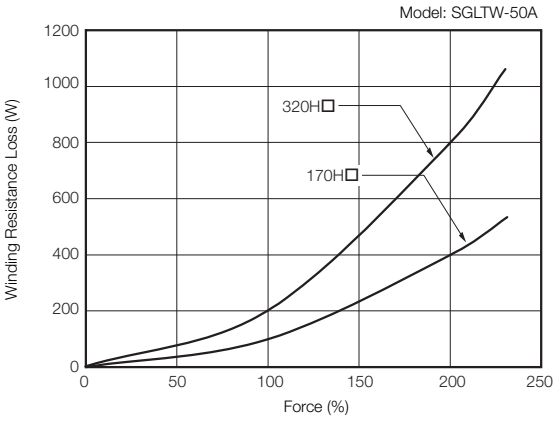

Model: SGLTW-80A

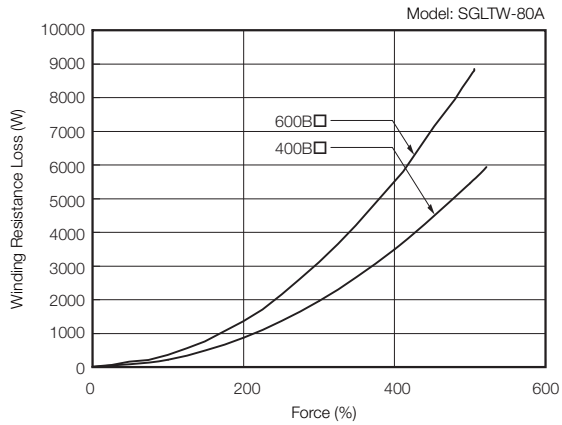

International Standards

● : Certified, – : Not Certified

Product		Model	UL/CSA Standards	CE Marking	KC Mark	RoHS Directive
SERVOPACKs		SGD7S	●	●	●	●
		SGD7W	●	●	●	●
Feedback Option	Fully-Closed Module	SGDV-OFA01A*1	●	●	●	●
Safety Option	Safety Module	SGDV-OSA01A*1	●	●	●	●

Product	Model	UL/CSA Standards	CE Marking	RoHS Directive
Rotary Servo Motors	SGM7J	●	●	●
	SGM7A	●	●	●
	SGM7P	●	●	●
	SGM7G	●	●	●
Direct Drive Servo Motors	SGMCS	●	*3	●*2
	SGM7F	●	●	●
	SGM7D	-	●	●
Linear Servo Motors	SGLFW2 (SGLFM2)*4	●	●	●
	SGLGW (SGLGM)*4	●	*5	●
	SGLFW (SGLFM)*4	●	*5	●
	SGLTW (SGLTM)*4	●	*5	●

*1. Use this model number to purchase the Option Module separately.

*2. Estimates are provided for RoHS-compliant products. The model numbers have an “-E” suffix.

*3. CE Marking certification has not yet been received for SGMCS-□□M and SGMCS-□□N Direct Drive Servo Motors. CE Marking certification has been received for the following Direct Drive Servo Motors: SGMCS-□□B, SGMCS-□□C, SGMCS-□□D, and SGMCS-□□E. Contact your Yaskawa representative if the CE Marking label is required.

*4. The model numbers of the Magnetic Ways of Linear Servo Motors are given in parentheses.

*5. CE Marking certification has been received. Contact your Yaskawa representative if the CE Marking label is required.

Warranty

◆ Details of Warranty

■ Warranty Period

The warranty period for a product that was purchased (hereinafter called the “delivered product”) is one year from the time of delivery to the location specified by the customer or 18 months from the time of shipment from the Yaskawa factory, whichever is sooner.

■ Warranty Scope

Yaskawa shall replace or repair a defective product free of charge if a defect attributable to Yaskawa occurs during the above warranty period.

This warranty does not cover defects caused by the delivered product reaching the end of its service life and replacement of parts that require replacement or that have a limited service life.

This warranty does not cover failures that result from any of the following causes.

- Improper handling, abuse, or use in unsuitable conditions or in environments not described in product catalogs or manuals, or in any separately agreed-upon specifications
- Causes not attributable to the delivered product itself
- Modifications or repairs not performed by Yaskawa
- Use of the delivered product in a manner in which it was not originally intended
- Causes that were not foreseeable with the scientific and technological understanding at the time of shipment from Yaskawa
- Events for which Yaskawa is not responsible, such as natural or human-made disasters

◆ Limitations of Liability

- Yaskawa shall in no event be responsible for any damage or loss of opportunity to the customer that arises due to failure of the delivered product.
- Yaskawa shall not be responsible for any programs (including parameter settings) or the results of program execution of the programs provided by the user or by a third party for use with programmable Yaskawa products.
- The information described in product catalogs or manuals is provided for the purpose of the customer purchasing the appropriate product for the intended application. The use thereof does not guarantee that there are no infringements of intellectual property rights or other proprietary rights of Yaskawa or third parties, nor does it construe a license.
- Yaskawa shall not be responsible for any damage arising from infringements of intellectual property rights or other proprietary rights of third parties as a result of using the information described in catalogs or manuals.

◆ Suitability for Use

- It is the customer's responsibility to confirm conformity with any standards, codes, or regulations that apply if the Yaskawa product is used in combination with any other products.
- The customer must confirm that the Yaskawa product is suitable for the systems, machines, and equipment used by the customer.
- Consult with Yaskawa to determine whether use in the following applications is acceptable. If use in the application is acceptable, use the product with extra allowance in ratings and specifications, and provide safety measures to minimize hazards in the event of failure.
  - Outdoor use, use involving potential chemical contamination or electrical interference, or use in conditions or environments not described in product catalogs or manuals
  - Nuclear energy control systems, combustion systems, railroad systems, aviation systems, vehicle systems, medical equipment, amusement machines, and installations subject to separate industry or government regulations
  - Systems, machines, and equipment that may present a risk to life or property
  - Systems that require a high degree of reliability, such as systems that supply gas, water, or electricity, or systems that operate continuously 24 hours a day
  - Other systems that require a similar high degree of safety
- Never use the product for an application involving serious risk to life or property without first ensuring that the system is designed to secure the required level of safety with risk warnings and redundancy, and that the Yaskawa product is properly rated and installed.
- The circuit examples and other application examples described in product catalogs and manuals are for reference. Check the functionality and safety of the actual devices and equipment to be used before using the product.
- Read and understand all use prohibitions and precautions, and operate the Yaskawa product correctly to prevent accidental harm to third parties.

◆ Specifications Change

The names, specifications, appearance, and accessories of products in product catalogs and manuals may be changed at any time based on improvements and other reasons. The next editions of the revised catalogs or manuals will be published with updated code numbers. Consult with your Yaskawa representative to confirm the actual specifications before purchasing a product.



Yaskawa is the leading global manufacturer of low and medium voltage variable frequency drives, servo systems, machine controllers and industrial robots. Our standard products, as well as tailor-made solutions, are well known and have a high reputation for outstanding quality and reliability.

Yaskawa America, Inc.
Drives & Motion Division
yaskawa.com

1-800-YASKAWA
Email: marcom@yaskawa.com

YAI-KAEPS80000123F-13
©2018 Yaskawa America, Inc.
Revision Date: 8/31/2018

YASKAWA